HEATCRAFT™
Worldwide Refrigeration

# Catalog

## Air heat exchangers

- Unit coolers
- Condensers
- Dry coolers

## Compressorized products

- Monoblocks
- Condensing units
- Split systems
- Encased outdoor condensing units
- Compressor racks
- Chillers
- Liquid chillers

FRIGA-BOHN

HYFRA® PEDIA

HK® REFRIGERATION

# **Heatcraft** - A complete range of refrigeration products proposed

## A selection tool at your disposal !

Commercial and industrial unit coolers, condensers, fluid coolers, condensing units, split systems, compressor racks, encased outdoor units...
To help with all your choices and calculations, we propose **our Heatcraft products software**.

Free multi-language software:

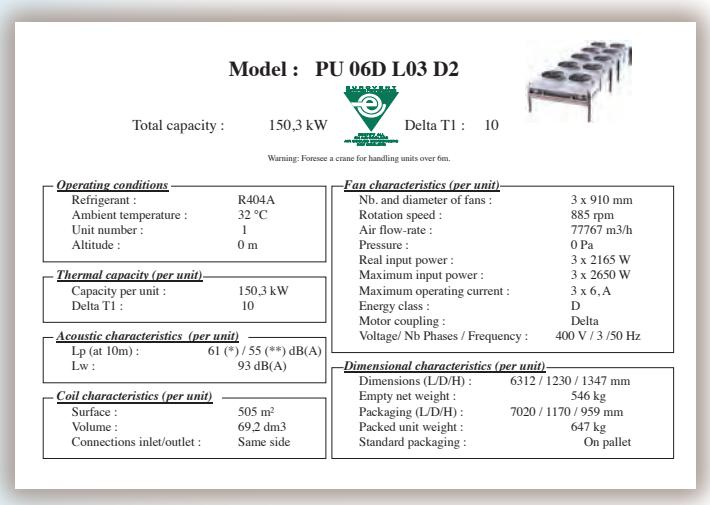

**Model : PU 06D L03 D2**

Total capacity : 150,3 kW  Delta T1 : 10

Warning: Foresee a crane for handling units over 6m.

| Operating conditions | |
|---|---|
| Refrigerant : | R404A |
| Ambient temperature : | 32 °C |
| Unit number : | 1 |
| Altitude : | 0 m |

| Thermal capacity (per unit) | |
|---|---|
| Capacity per unit : | 150,3 kW |
| Delta T1 : | 10 |

| Acoustic characteristics (per unit) | |
|---|---|
| Lp (at 10m) : | 61 (*) / 55 (**) dB(A) |
| Lw : | 93 dB(A) |

| Coil characteristics (per unit) | |
|---|---|
| Surface : | 505 m² |
| Volume : | 69,2 dm3 |
| Connections inlet/outlet : | Same side |

| Fan characteristics (per unit) | |
|---|---|
| Nb. and diameter of fans : | 3 x 910 mm |
| Rotation speed : | 885 rpm |
| Air flow-rate : | 77767 m3/h |
| Pressure : | 0 Pa |
| Real input power : | 3 x 2165 W |
| Maximum input power : | 3 x 2650 W |
| Maximum operating current : | 3 x 6, A |
| Energy class : | D |
| Motor coupling : | Delta |
| Voltage/ Nb Phases / Frequency : | 400 V / 3 /50 Hz |

| Dimensional characteristics (per unit) | |
|---|---|
| Dimensions (L/D/H) : | 6312 / 1230 / 1347 mm |
| Empty net weight : | 546 kg |
| Packaging (L/D/H) : | 7020 / 1170 / 959 mm |
| Packed unit weight : | 647 kg |
| Standard packaging : | On pallet |

- Selection of all models without options.
- Thermodynamic calculations.
- Equipment dimensions on all sheets in digital format.
- Printing of data sheets for compilation of a price proposal.

This software is updated several times a year and may be downloaded directly from our website:

**www.heatcrafteurope.com**

E Solutions
Efficiency • Environment

## Our expertise at the service of energy saving !

## An optional electronic switching motor (EC) is proposed for all models in the NEOSTAR range.

This motor offers a reduction in energy consumption for a given power rating:
a detailed comparison of the energy balance may be applied for all projects studied.

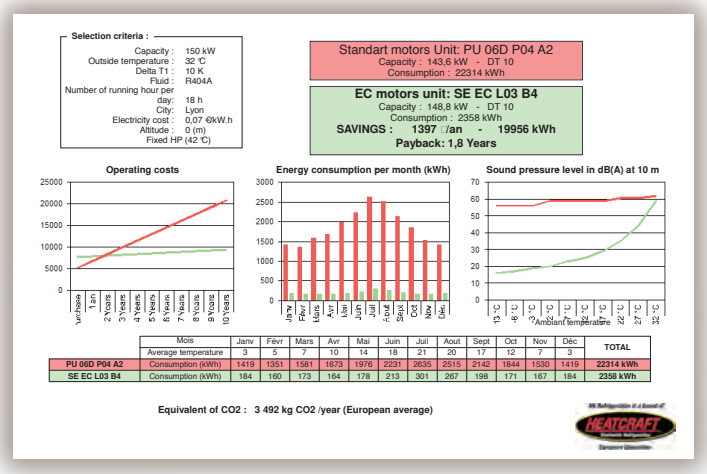


| Mois | Janv | Févr | Mars | Avr | Mai | Juin | Juil | Aout | Sept | Oct | Nov | Déc | TOTAL |
|---|---|---|---|---|---|---|---|---|---|---|---|---|---|
| Average temperature | 3 | 5 | 7 | 10 | 14 | 18 | 21 | 20 | 17 | 12 | 7 | 3 | |
| PU 06D P04 A2 Consumption (kWh) | 1419 | 1351 | 1581 | 1673 | 1976 | 2231 | 2635 | 2515 | 2142 | 1844 | 1530 | 1419 | 22314 kWh |
| SE EC L03 B4 Consumption (kWh) | 184 | 160 | 173 | 164 | 178 | 213 | 301 | 267 | 198 | 171 | 167 | 184 | 2358 kWh |

HEATCRAFT™
Worldwide Refrigeration


**For further information, please do not hesitate to contact us:**
42, rue Roger Salengro • BP 205 • 69741 Genas Cedex • France
Phone: +33 (0) 472 471 444 • Fax: +33 (0) 472 471 399
customer.serv@heatcrafteurope.com

# Our product range - Index


| HEATCRAFT | page |
|---|---|
| On a Global and European scale | 2 |
| Performance and environment: E Solutions - Eurovent - Certifications | 3 |

| **FOOD** - Our food markets: **Food Service (FFS) - SuperMarket (FSM) - Cold Storage (FCS)** | 4 |
|---|---|
| Our eCO2Gen offer: monitored CO2 refrigeration | 5 |

| Air heat exchangers | | | Solutions | | | FOOD | | | INDUSTRY | |
|---|---|---|---|---|---|---|---|---|---|---|
| **Unit coolers – Overview / Capacities / Appendix** | | | DX | W | $CO_2$ | FFS | FSM | FCS | | 6 |
| **Commercial ranges** | | | | | | | | | | |
| Under-counter | EVB | 0,2 > 0,4 kW | ✔ | | | ✔ | | | | 11 |
| Ceiling unit | XR | 0,4 > 1 kW | ✔ | | | ✔ | | | | 13 |
| | MF / MFE | 0,2 > 0,8 kW | ✔ | | | ✔ | | | | 17 |
| | MR / MRE | 0,4 > 2,6 kW | ✔ | ✔ | ✔ | ✔ | ✔ | | | 21 |
| | MH / MHE | 1,5 > 7,7 kW | ✔ | ✔ | ✔ | ✔ | ✔ | | | 25 |
| Cassette | KRS / KRS-W | 1,5 > 9 kW | ✔ | ✔ | | ✔ | ✔ | | | 29 |
| Dual discharge | TA | 2 > 22 kW | ✔ | ✔ | ✔ | ✔ | ✔ | | | 33 |
| Cubic | MUC - LUC | 1 > 13,7 kW | ✔ | ✔ | ✔ | ✔ | ✔ | | | 39 |
| | SD | 1,25 > 12,2 kW | ✔ | ✔ | | ✔ | ✔ | | | 45 |
| | SKB | 4 > 30,5 kW | ✔ | ✔ | ✔ | | ✔ | ✔ | | 49 |
| **Industrial ranges** | | | | | | | | | | |
| Dual discharge | GTI - GT2I | 10 > 123,5 kW | ✔ | ✔ | | | | ✔ | | 57 |
| Cubic | NK | 6 > 130 kW | ✔ | ✔ | ✔ | | | ✔ | | 67 |
| Tunnel | NW | 4 > 63 kW | ✔ | ✔ | | | | ✔ | | 79 |
| | NF | 35 > 110 kW | ✔ | | | | | ✔ | | 85 |
| Centrifugal | NC | 5,2 > 80 kW | ✔ | ✔ | | | | ✔ | | 89 |
| **Condensers - Overview / Capacities / Appendix** | | | DX | W | $CO_2$ | FFS | FSM | FCS | | 95 |
| Axial | EC motor - Control | | | | | | | | | 99 |
| | MA | 3 > 14 kW | ✔ | | | ✔ | ✔ | | | 101 |
| | WA | 7 > 198 kW | ✔ | | | ✔ | | | | 103 |
| | NEOSTAR | 18 > 1250 kW | ✔ | | | | ✔ | ✔ | | 107 |
| Centrifugal | CCT | 4 > 138 kW | ✔ | | | ✔ | ✔ | | | 125 |
| | CCV | 61 > 302 kW | ✔ | | | ✔ | ✔ | | | 131 |
| **Dry coolers - Overview / Capacity / Appendix** | | | DX | W | $CO_2$ | FFS | FSM | FCS | | 95 |
| Axial | FC NEOSTAR | 20 > 1200 kW | | ✔ | | | | | ✔ | 135 |
| Axial in V | AEV | 150 > 1400 kW | | ✔ | | | | | ✔ | 139 |

| Compressorized products - Capacities | | | Solutions | | | FOOD | | | INDUSTRY | 141 |
|---|---|---|---|---|---|---|---|---|---|---|
| **Monoblocks - Condensing units and Split-systems** | | | DX | W | $CO_2$ | FFS | FSM | FCS | | |
| Monoblock | EUROMON | 0,6 > 4,5 kW | ✔ | | | ✔ | | | | 143 |
| Condensing unit and Split-system | CLIMACAVE | 0,6 > 3,5 kW | ✔ | | | ✔ | | | | 147 |
| | MINI - MINIPLUS | 0,6 > 3,5 kW | ✔ | | | ✔ | | | | 149 |
| | VANGUARD - SPLIT VANGUARD | 0,5 > 12,2 kW | ✔ | | | ✔ | | | | 155 |
| | MAXI - MAXICLIMA | 2 > 22,5 kW | ✔ | | | ✔ | | | | 163 |
| **Encased outdoor condensing units** | | | DX | W | $CO_2$ | FFS | FSM | FCS | | |
| Single-compressor | MEGA | 3 > 72 kW | ✔ | | | | | ✔ | | 175 |
| | MONOHAVANE | 5 > 75 kW | ✔ | | | | | ✔ | | 181 |
| Multi-compressors | MULTIHAVANE | 3 > 290 kW | ✔ | | | | ✔ | ✔ | | 187 |
| **Compressor racks** | | | DX | W | $CO_2$ | FFS | FSM | FCS | | |
| Semi-hermetic piston | eCO2Gen (R744) | 18 > 80 kW | | | ✔ | | ✔ | ✔ | | 197 |
| Semi-Hermetic piston and Scroll | COMPACT | 6 > 110 kW | ✔ | | | | ✔ | | | 201 |
| | MOPSH - MOSC | 9 > 400 kW | ✔ | | | | ✔ | ✔ | | 209 |
| Semi-hermetic screw compressor | MOVSH | 70 > 700 kW | ✔ | | | | ✔ | ✔ | | 215 |
| Other racks | ENCASED - DUPLEX - BOOSTER - MONOSH | | ✔ | | | ✔ | ✔ | ✔ | | 217 |
| **Chillers - Glycol water production racks** | | | DX | W | $CO_2$ | FFS | FSM | FCS | | |
| Ice water production | PEG - ECOLEAN - NEOSYS | | | ✔ | | | ✔ | ✔ | | 221 |

*FFS* *Cafés - Hotels - Restaurants - Corner shops - Mini-markets*
*FSM* *Hard Discount - Supermarkets - Hypermarkets*
*FCS* *Refrigerated storage and transit stocking - Dispatch centres - Food processing - Canteen kitchens*

*DX Direct expansion - W Water glycol - $CO_2$ R744*

| **INDUSTRY** - Our industrial markets: **Machine Tooling (IMT) - ENergie (IEN) - TeleCom (ITC)** | | 225 |
|---|---|---|
| **Liquid coolers** | DX W $CO_2$ FFS FSM FCS | |
| Presentation of products proposed | ✔ ✔ | 227 |

| **Services and spare parts -** *An entire team at your service!* | 233 |
|---|---|

# Heatcraft - On a Global and European scale

## Heatcraft, refrigeration within the LENNOX Group

**Global leader for heating, air conditioning and refrigeration solutions.**

## LII key data

- A key player in the air-conditioning sector, listed on the New-York Stock Exchange (NYSE).
- 3.1 billion dollars annual turnover
- 12,000 employees worldwide
- Head-office in Dallas, Texas.
- 4 divisions

**Services**
Sale, installation, commissioning and maintenance
USA - Canada

**Refrigeration**
Unit coolers, condensers, fluid cooler, chillers, condensation units, racks, systems, display cases...
Worldwide

**Heating & Air-conditioning**
**Residential**
Stand-alone and central air conditioning system, heat pumps, fireplaces and hearth products …
USA - Canada

**Heating & Air-conditioning**
**Commercial**
Rooftops, split systems, chillers…
USA - Canada - Europe

**Heatcraft, global leader in the industrial and commercial refrigeration sectors**

Our products are used to preserve food and other perishable goods in supermarkets, convenience stores, restaurants, warehouses and distribution centres... but also for other applications such as data centres, power plants, industrial cooling processes...

## Heatcraft key data

- LII Division founded in 1988
- Present in over 70 countries
- 2010 turnover: 751M US$
- Workforce: ~2,000 employees
- 10 factories: total floor space 186,000 m²

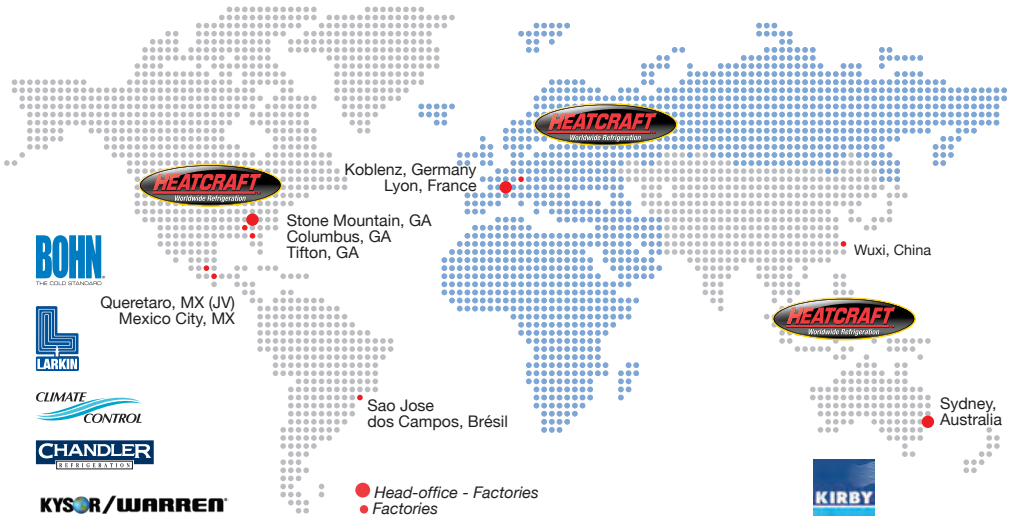


## Heatcraft Europe, covering the EMEA zone

Heatcraft Europe has sales offices, agents and wholesalers in over 50 countries.

## Our brands in Europe

**Factory in Genas (Lyon)**
France - 14,000 m² - 300 employees

**Factory in Krunkel (Koblenz)**
Germany - 3,000 m² - 150 employees

### Our sales offices

- **Genas** (Lyon), France
- **Krunkel** (Koblenz), Germany
- **Barcelona**, Spain
- **Warsaw**, Poland
- **Moscow**, Russia

## E Solutions

### the sign for our environmental commitment

- Propose intelligent solutions to improve the refrigeration process and rationalise daily tasks for our customers.
- Design reliable products, with a high energy performance offering a reduction in running costs and an improvement in performance (Life Cycle Cost Performance).
- Sustainable solutions contributing towards a reduction in the carbon footprint (GWP).

### "Energy efficiency" solutions

Products combining high performance and low environmental impact (e.g. use of EC motors, ...).

### "Low noise level" solutions

Most of our outdoor units (condensers/condensing units) are designed to run at a very low noise level to ensure perfect integration in an urban environment. EC motor-fan units are also used to help reduce the noise level.

### "Natural refrigerants" solutions

Equipment using natural refrigerants such as fluid coolers, air coolers, unit coolers and CO2 racks, as well as ice slurry systems.

### "Environment"solutions

All so-called "smart solutions" use a low quantity of refrigerant (e.g. micro-channel technology enabling a reduction in the quantity of refrigerant in the condensing and cooling units).

## Our certifications

Heatcraft has for many years been engaged in a certification process to always satisfy market needs and expectations:

**ISO 9001 -** Our company is LRQA certified.
It meets the quality assurance criteria of ISO 9001.

**CE -** Our products are CE labelled:

- 2006/95/CE "low voltage" (LV),
- 2004/108/CE "Electromagnetic compatibility" (EMC). (with the exception of electrical equipment intended for use in an explosive atmosphere).
- 2002/95/CE (ROHS) and 2002/96/CE (DEEE) relative to electrical and electronic equipment.

**GOST -** Our products are compliant with CEI standards.

### PED (Pressurised Equipment Directives)

Our products concerned by the pressurised equipment directive DESP 97/23/CE are marked CE0038 indicating their compliance with this directive. These products are supplied with technical instructions and a Declaration of Conformity to DESP 97/23/CE.

Heatcraft products use fluids of the group 2 and function with an operating pressure of:

- For HFC fluids (except R134a): **LP = 19 bar – HP = 28 bar**
- For R134a: **LP = 14 bar – HP = 22 bar**

In the case of the eCO2Gen range using CO2 as fluid, the operating pressures are:

**LP = 22 bar – HP = 45 bar**

**Heat-exchangers:** unit coolers and condensers labelled CE in accordance with directive 2006/95/CE "Low voltage" are therefore excluded from the scope of application of directive 97/23/CE as they are covered by category I at the most, heat-exchangers composed of pipes intended for air cooling or condensation of refrigerant of group 2:

| | |
|---|---|
| Unit coolers: | **TS = -40/+43°C – OP = 25 bars** |
| The condensers: | **TS = -40/+120°C – OP = 40 bars** |
| **$CO_2$ unit coolers:** | **TS = -40/+43°C – OP = 50 bars** |

### Heatcraft, a member of the EUROVENT program

**Certify All : Dry Coolers / Air Cooled Condensers / Dx Air Coolers**

Certified performance, guaranteeing the level of reliability and performance indicated (cooling capacity, input power, noise level, energy class).

A voluntary action to guarantee total transparency for our customers.

Products are checked by an independently approved test laboratory.

## Heatcraft is specialised in food refrigeration

**Solutions combining refrigeration production units with heat-exchangers offering global management of installations, equipment and servicesfor convenience stores, supermarkets and even refrigerated warehouses.**

### Food - Food Service (FFS)

- Cafés/Hotels/Restaurants
- Corner stores
- Mini-supermarkets

**Their cooling requirements**
- Conservation
- Refrigeration

**Our product solutions**

**Compressorized products:**
- Monoblock systems
- Split systems
- Condensing units
- Cased, outdoor single-compressor units

**Air heat exchangers:**
- Commercial unit coolers: dual-discharge, low and medium profile
- Helicoidal and centrifugal air cooled condensers

### Food - SuperMarket (FSM)

- Supermarkets
- Hypermarkets
- Hard discounters

**Their cooling requirements**
- Conservation
- Refrigeration

**Our product solutions**

**Compressorized products:**
- Cased, outdoor single and multi large condensing units
- Reciprocating, scroll and screw compressor racks
- Glycol water production racks

**Air heat exchangers:**
- Commercial unit coolers: cassette, dual-discharge and medium profile
- Industrial unit coolers: high profile and centrifugal
- Helicoidal and centrifugal air cooled condensers

**Electrical / control cabinets**

### Food - Cold Storage (FCS)

- Refrigerated storage and transit stocking
- Food processing
- Distribution centres
- Canteen kitchens

**Their cooling requirements**
- Conservation
- Refrigeration
- Freezing
- Deep-freezing

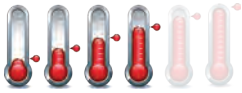

**Our product solutions**

**Compressorized products:**
- Cased, outdoor single and multi large condensing units
- Reciprocating, scroll and screw compressor racks
- Glycol water production racks

**Air heat exchangers:**
- Industrial unit coolers: high profile, blast freezers, centrifugal and dual-discharge
- Helicoidal air cooled condensers

**Electrical / control cabinets**

## Totally controlled low temperatures for supermarkets

Our service package also includes the supply of all components required for a supermarket installation such as:

- A low temperature CO2 (R744) rack,
- A chill rack (direct expansion or glycol water heat-exchanger) designed in coherence with the low temperature rack,
- Unit coolers (certified Eurovent) functioning with direct expansion (R404A, R134a, R744) or glycol water,
- An air-cooled condenser (Eurovent certified),
- A switching enclosure including the electronic control system (automatic and back-up operation).

The control function ensures safe operation of a unit in relation to another unit:

- Forced chill temperature start up when low temperature is requested
- Control of the low temperature CO2 (R744) stations depending on their availability to produce low or chill temperatures.

### Medium temperature production

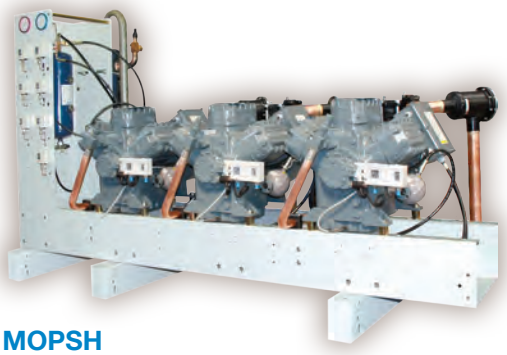

**MOPSH**
*medium temperature rack*
*with glycol water heat-exchanger or direct expansion,*
*semi-hermetic piston compressor,*
*capacity from 150 to 400 kW*

### Low temperature production

**eCO2Gen**
*low temperature*
*$CO_2$ (R744) rack*
*capacity from 18 to 80 kW*

**MOVSH**
*medium temperature rack*
*with glycol water heat-exchanger or direct expansion,*
*semi-hermetic screw compressor,*
*capacity from 300 to 700 kW*

### Electrical cabinet and control system

### A range of low temperature unit coolers operating with $CO_2$ (R744) and direct expansion

**LUC ... C**
*commercial unit cooler*
*capacity from 1 to 6 kW*

**SKB ... C**
*commercial unit cooler*
*capacity from 4 to 19 kW*

HEATCRAFT™
Worldwide Refrigeration

# Air heat exchangers

## Commercial unit coolers

- Under-counter unit coolers
  **EVB**
- Ceiling unit coolers
  **XR - MF / MFE - MR / MRE - MH / MHE**
- Unit cooler cassettes
  **KRS / KRS-W**
- Dual-discharge unit coolers
  **TA**
- Cubic unit coolers
  **MUC / LUC - SD - SKB**

## Industrial unit coolers

- Dual-discharge unit coolers
  **GTI / GT2I**
- Cubic unit coolers
  **NK**
- Tunnel unit coolers
  **NW - NF**
- Centrifugal fan unit coolers
  **NC**

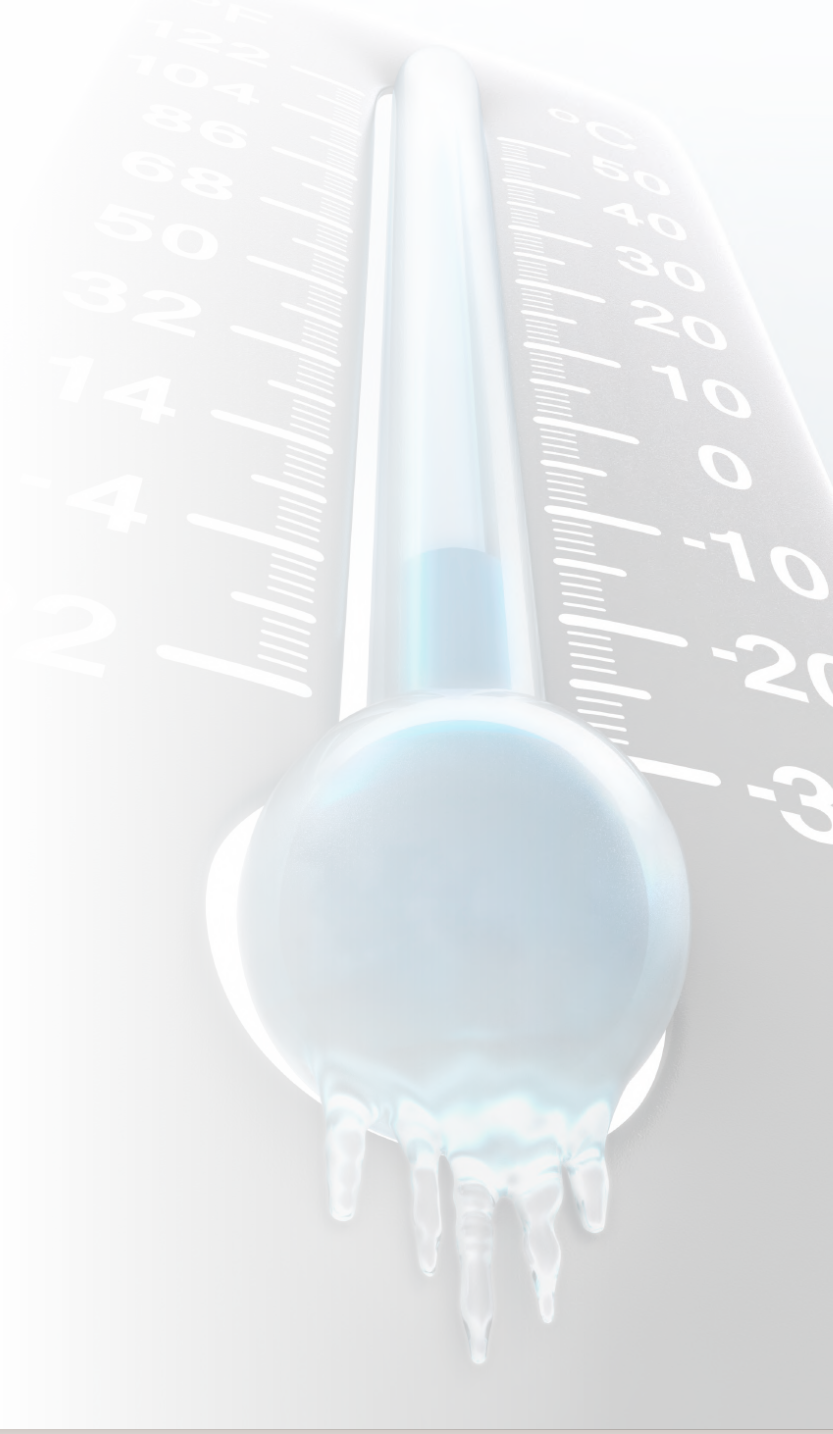

Heatcraft reserves itself the right to make changes at any time without preliminary notice - Photos non-contractual

FRIGA-BOHN

HYFRA® PEDIA

HK® REFRIGERATION

# **Unit coolers** - Overview and capacities

| | | | EVB | XR | MF | MR | MH | KRS |
|---|---|---|---|---|---|---|---|---|
| | | | | | | | | |
| Capacity | R404A | Maxi | **410 W** | **1030 W** | **790 W** | **2620 W** | **7,7 kW** | **9 kW** |
| | | Mini | **240 W** | **435 W** | **270 W** | **380 W** | **1,5 kW** | **1,5 kW** |
| Fans | Number | Axial | - | 1 | 1 > 2 | 1 > 4 | 2 > 4 | - |
| | | Centrifugal | 1 > 2 | - | - | - | - | 1 > 2 |
| | Factory wired | | ● | ● | ● | ● | ● | ● |
| | Position and blowing | | | 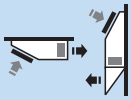 | 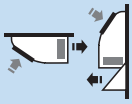 | | | |
| Coil | Coil protection | | ● * | ● * | ● * | ● * | ○ | ● |
| | Fin spacing | | 2,1 mm | 2,1 mm | 4,23 mm<br>6,35 mm | 4,23 mm<br>6,35 mm | 4,23 mm<br>6,35 mm | 2,81 mm |
| Casing | Pre-painted | | ● | ● | - | - | ● | ● |
| | ABS ❄ | | ● | ● | ● | ● | - | ● |
| E Solutions Efficiency • Environment | Natural fluids | | - | - | - | 💧 | 💧 | 💧 |
| | Noise level | | - | - | - | - | - | 🔊 |
| Refrigerated units / cells / small cold rooms | | | ✔ | ✔ | ✔ | - | - | - |
| Cold rooms | | | - | - | ✔ | ✔ | ✔ | - |
| Kitchens / work areas / laboratories | | | - | - | - | - | - | ✔ |
| Warehouses / storage | | | - | - | - | - | - | - |
| Food processing | | | - | - | - | - | - | - |
| Rapid cooling / deep-freezing | | | - | - | - | - | - | - |

## Chill applications

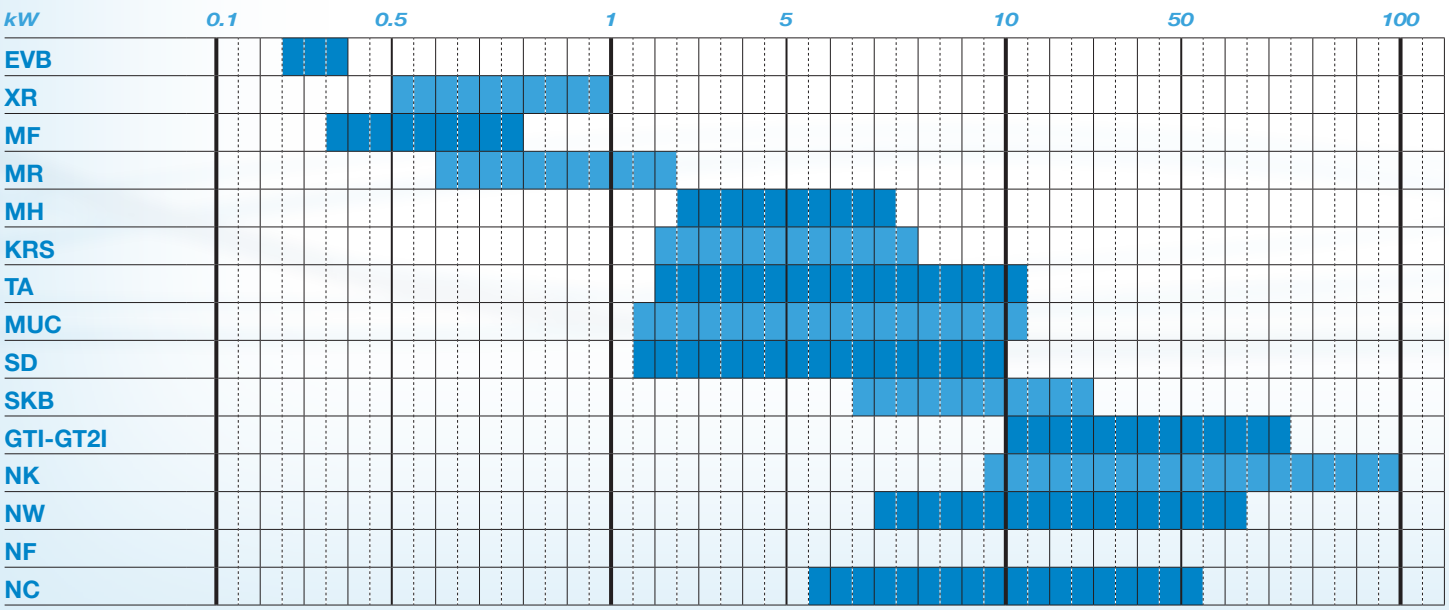

# **Unit coolers** - Overview and capacities

| TA | MUC-LUC | SD | SKB | GTI | GT2I | NK | NW | NF | NC |
|---|---|---|---|---|---|---|---|---|---|
| 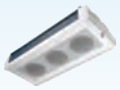 | | | | | | | | | |
| 22 kW | 13,7 kW | 12,2 kW | 30,5 kW | 73,6 kW | 123,3 kW | 130 kW | 63 kW | 110 kW | 80 kW |
| 2 kW | 1 kW | 1,3 kW | 4 kW | 10,2 kW | 19,4 kW | 6 kW | 4 kW | 35 kW | 5,2 kW |
| 1 > 4 | 1 > 4 | 1 > 4 | 1 > 4 | 3 > 5 | 2 > 4 | 1 > 4 | 1 > 4 | 2 > 6 | - |
| - | - | - | - | - | - | - | 1 > 4 | - | 1 > 4 |
| ● | ● | ● | ○ | ● | ○ | ○ | ○ | ○ | ○ |
| | | | | | | | | | |
| ○ | ○ | ○ | ○ | ○ | ○ | ○ | - | - | ○ |
| 3,63 mm<br>6,35 mm | 4,23 mm<br>6,35 mm | 4,23 mm<br>6,35 mm | 4,23 mm<br>6,35 mm | 4,00 mm<br>6,00 mm | 4,23 mm<br>7,00 mm | 4,00 mm<br>6,00 mm<br>9,00 mm<br>12,00 mm | 6,00 mm<br>9,00 mm<br>12,00 mm | 9,00 mm | 4,00 mm<br>6,00 mm |
| - | ● | - | ● | ● | ● | ● | ● | ● | ● |
| ● | - | ● | - | - | - | - | - | - | - |
| 💧 | 💧 | 💧 | 💧 | 💧 | 💧 | 💧 | 💧 | - | 💧 |
| 🔊 | - | - | - | 🔊 | 🔊 | - | - | - | - |
| - | - | - | - | - | - | - | - | - | - |
| ✔ | ✔ | ✔ | ✔ | - | - | - | - | - | - |
| ✔ | - | ✔ | | ✔ | ✔ | - | - | - | ✔ |
| - | - | - | ✔ | ✔ | ✔ | ✔ | - | - | - |
| - | - | - | - | ✔ | ✔ | ✔ | - | - | ✔ |
| - | - | - | - | - | - | ✔ | ✔ | ✔ | - |

** Painted coil (chill applications)* ● *Standard* ○ *Option*

## Low-temperature applications

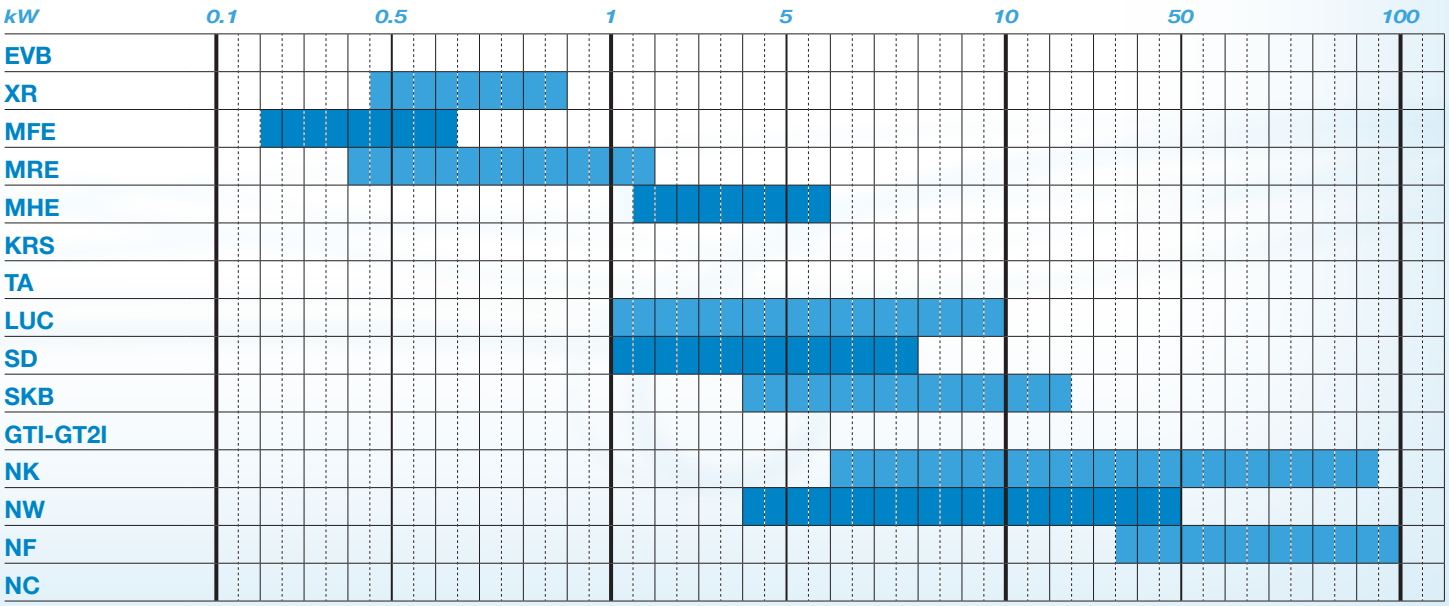

## Selection coefficients

### Standard conditions

| Standard conditions | $t_{A1}$ Air inlet temp. | $t_e$ Evaporating temp. | DT1 standard |
|---|---|---|---|
| SC 1 | +10 °C | 0 °C | 10 |
| SC 2 | 0 °C | - 8 °C | 8 |
| SC 3 | -18 °C | -25 °C | 7 |
| SC 4 | -25 °C | -31 °C | 6 |
| SC 5 | -34 °C | -40 °C | 6 |

### Hygrometric coefficient

| Hygrometric coefficient | Relative humidity % | Nominal capacity / Standard capacity |
|---|---|---|
| SC 1 | 85 | 1,35 |
| SC 2 | 85 | 1,15 |
| SC 3 | 95 | 1,05 |
| SC 4 | 95 | 1,01 |

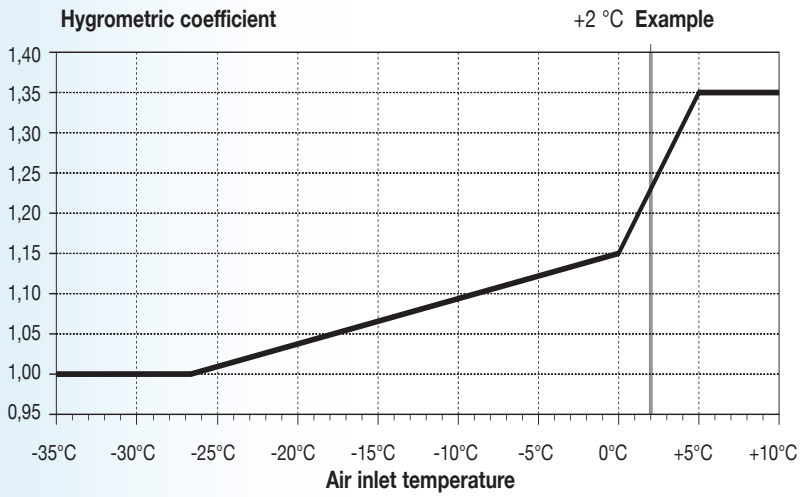


### Correction coefficient of DT1

For low glide fluids (less than 1K), or no glide, it is accepted that the capacity is directly proportional to the difference between the inlet air temperature and the evaporation temperature (DT1) i.e.:

$$\text{Required capacity} = \frac{\text{Nominal capacity x DT1 required}}{\text{DT1 standard}}$$

### Refrigerant coefficient

| Refrigerant | R 404A/R 507 | R 22 | R 134a |
|---|---|---|---|
| SC 1 | 1 | 0,95 | 0,93 |
| SC 2 | 1 | 0,95 | 0,91 |
| SC 3 | 1 | 0,95 | 0,85 |
| SC 4 | 1 | 0,95 | - |

### Fin material coefficient

| Aluminium fin | Protected aluminium fin | Copper fin |
|---|---|---|
| 1 | 0,97 | 1,03 |

### Example

**Whereby:**

| | |
|---|---|
| Capacity required | **Q = 6000 W** |
| Air inlet temperature | **$t_{A1}$ = +2 °C** |
| Evaporation temperature | **$t_e$ = -8 °C** |
| Refrigerant | **R 22** |
| Coil with protected fins | |

In which case:
**DT1 = tA1 - te = (+2)-(-8) = 10K**

To select under standard conditions, the following correction coefficients must be applied:

| | |
|---|---|
| - Relative humidity coefficient | **1,15/1,23 = 0,935** |
| - Correction coefficient for DT1 | **8/10 = 0,8** |
| - Refrigerant coefficient | **1/0,95 = 1,05** |
| - Fin material coefficient | **1/0,97 = 1,03** |

Expressed for given standard conditions, the required capacity of 6000 W becomes:

**6000 x 0,935 x 0,8 x 1,05 x 1,03 = 4854 W**

One therefore selects an **MUC 420 R**.

### On-board equipment

Our units are static. Included in a refrigeration system, they may be exited by motors, compressors, diesel engines, vehicles or others and suffer from vibration.
The person responsible for the system must ensure that the excitation frequency may not, under any circumstances, provoke the resonance of other components as this could result in irreparable damage (in particular in the case of on-board systems).

# Under-counter unit cooler

## EVB commercial range

- The EVB unit coolers meet the requirements of under-counter coolers and cooling units: compactness, hygiene and performance.
- Minimal thickness of only 8 to 8.9 cm depending on models.
- No condensation retention zones thanks to the ABS drain pan with rounded corners.
- The treated coil is standard as well as the stainless steel screws guaranteeing protection when used in a corrosive environment.
- Radial motor ensuring an excellent air distribution.
- 2 bi-lateral blower models available.

240 410 W

Heatcraft reserves itself the right to make changes at any time without preliminary notice - Photos non-contractual

# EVB - Commercial under-counter unit cooler

R404A

## Market segments

*FFS Bars - Restaurants – Corner shops – Mini-markets*

## Description

### Casing

- **Aesthetics:** white casing.
- **Hygiene:** no condensation retention zones thanks to the ABS drain pan with rounded corners.
- **Compactness:** limited height and depth.
- **Anti-corrosion:** enamelled galvanized steel casing and stainless steel screws.

### Ventilation

- **Anticorrosion** : turbine aluminium. • Anti-corrosion: aluminium turbine.

### Coil

- **Anti-corrosion:** polyester coated fins.
- **Performance**: 5/16" tubes, low internal refrigerant volume.

### Defrost

- **Defrost**: optional heater kit (a retrofit is particularly easy on an already installed unit cooler).

## Certifications

*Range not concerned by Eurovent certification.*

## Designation

# EVB M(1) 1(2)

(1) **M** = wall mounting - **C** = central mounting
(2) Model

| | | EVB ... | M1 | M2 | M3 | C1 | C2 |
|---|---|---|---|---|---|---|---|
| Capacity | DT1 = 10K - SC 1 | W | 240 | 320 | 380 | 240 | 410 |
| Circuit volume | | $dm^3$ | 0,32 | 0,32 | 0,46 | 0,32 | 0,46 |
| Fan (2) 230 V/1/50 Hz 2200 r.p.m. Ø 45 mm | Air flow | $m^3/h$ | 65 | 95 | 105 | 65 | 110 |
| | Air throw (1) | m | 3,5 | 3,5 | 3,5 | 2 x 3,5 | 2 x 3,5 |
| | | Nb | 1 | 1 | 1 | 2 | 2 |
| | | W total | 15 | 22 | 22 | 26 | 30 |
| | | A total | 0,15 | 0,22 | 0,22 | 0,26 | 0,30 |
| Electric defrost | 230V/1/50Hz | W | 210 | 210 | 290 | 210 | 290 |
| Net weight | | kg | 3,9 | 4,0 | 5,0 | 4,7 | 5,7 |
| Dimensions | L | mm | 370 | 370 | 490 | 370 | 490 |
| | X | mm | 340 | 340 | 460 | 340 | 460 |
| | T | mm | 386 | 386 | 506 | 386 | 506 |
| | V | mm | 120 | 180 | 180 | 60 | 120 |
| Connections | Inlet | Ø E | 5/16" | 5/16" | 5/16" | 5/16" | 5/16" |
| | Outlet | Ø S | 5/16" | 5/16" | 5/16" | 5/16" | 5/16" |
| Option | | E1K | O | O | O | O | O |

*(1) When the chamber size allows air circulation.*
*(2) Motor, class B, long-life bearings.*

## Advantages

### Installation

Easy reversing of casing and drain pan according to the site conditions to facilitate installation.

The models M1, M2 and M3 (wall mounting) are optimized with low space requirements and long air throw.

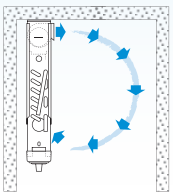

The models C1 and C2 (central mounting) ensure optimized air flow as well as partitioning of the zone in two sections.

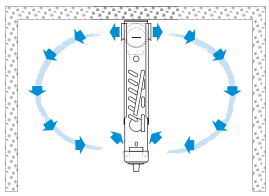

### Servicing / Maintenance

The unit cooler becomes totally accessible with easy removal of the "clipped" fan panel and drain pan rendering cleaning and maintenance far simpler.

| Kit | Factory |
|---|---|
| E1K | |

## Options

### Defrost

Electric defrost.

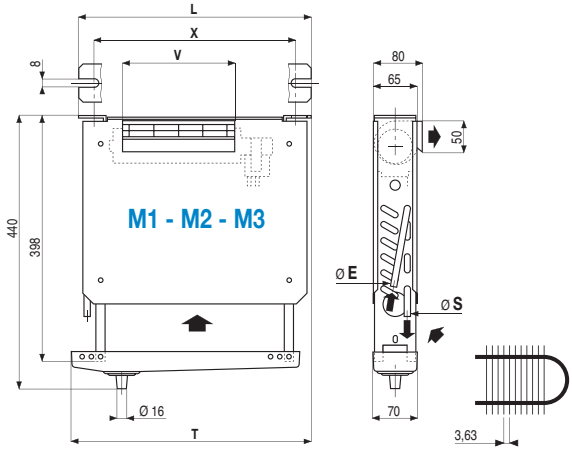


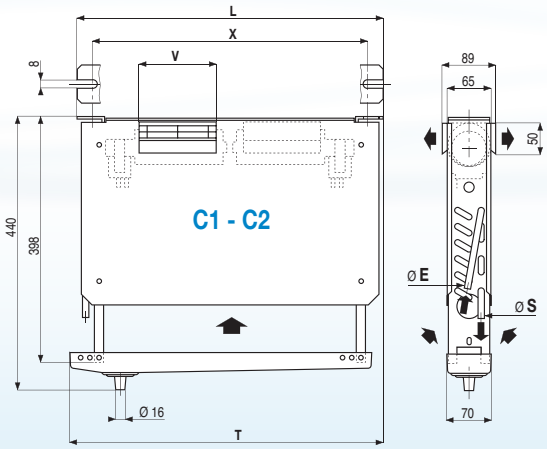

HEATCRAFT
Worldwide Refrigeration

# Ceiling unit cooler

## XR commercial range

- The MF range is designed for use in refrigerated cabinets, bars, under-counter unit and small storage cold rooms: compactness, hygiene and performance.
- Wall or ceiling mounted.
- Directional ABS intermediate drain pan reduces the condensation effect on panelling.
- Coil with aluminium fins spaced at 4.23 mm totally treated as standard.

Ceiling mounting

Wall mounting

435 1030 W

Heatcraft reserves itself the right to make changes at any time without preliminary notice - Photos non-contractual

FRIGA-BOHN HYFRA PEDIA HK REFRIGERATION

# XR - Commercial ceiling unit cooler

## Market segments

*FFS Bars - Restaurants – Corner shops – Mini-markets*

## Designation

**XR**(1) **100**(2)

(1) Unit cooler
(2) Model

## Certifications

*Range not concerned by Eurovent certification.*

## Description

### Casing

- Aesthetics white-enamelled galvanized steel and plastic casing.
- Intermediate drain pan for ceiling mounting, to limit water condensation.
- Single cardboard box packaging.

### Ventilation

- The electric fans Ø 200 mm (photo n°1) used in the XR range are of the enclosed, single-phase type, 230 V, 50-60 Hz, class B, permanently lubricated delivered with a one meter long 3 x 0.75 mm2 cable:
  - 4P = 1,500 rpm, impedance-protected motor (low noise level).
  - 2P = 3,000 rpm, motor with thermal overload protection incorporated (high performance).

### Coil

- The finned coils of the XR range are designed with corrugated aluminium fins with polyester finish (photo n° 2) with fin spacing of 4.23 mm and internally grooved copper tubes.

1.

2.

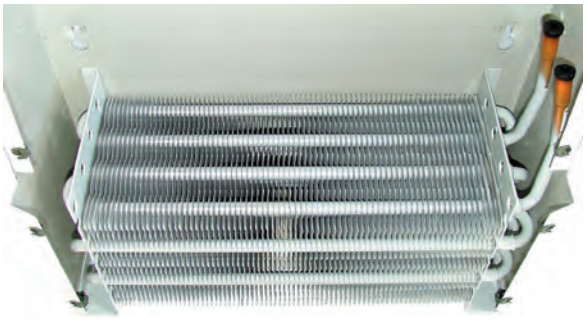

3.

## Advantages

| Installation |
|---|
| "Keyhole" fastening requiring only one person. |
| Drilling template printed on the cardboard packaging. |
| 8 knock-out holes for passage of tubes and cables. |
| Factory provided as ceiling-mounted model.<br>Simple transformation into a wall-mounted model. |
| 4 drain pipe positions possible when ceiling mounted (2 for wall mounting) in order to offer the user the maximum volume available (photo n°3). |
| **Servicing / Maintenance** |
| Access to all components from the front. |

## Options

| Kit | Factory |
|---|---|
| E1K | |

### Defrost

Electric defrost
**ATTENTION** use in SC3 for ceiling mounting only: use of E1K kit compulsory.

## XR ... 4,23 mm

| | | XR ... | 60 | 72 | 80 | 85 | 90 | 100 | 105 | 122 |
|---|---|---|---|---|---|---|---|---|---|---|
| Capacity R404A (1) | DT1 = 8 K - SC 2 | W | 495 | 620 | 665 | 725 | 770 | 830 | 895 | 1030 |
| | DT1 = 7 K - SC 3 (3) | W | 435 | 545 | 585 | 635 | 675 | 730 | 785 | 905 |
| Surface | | $m^2$ | 1,56 | 2,08 | 2,58 | 2,08 | 3,10 | 2,58 | 3,10 | 3,86 |
| Circuit volume | | $dm^3$ | 0,31 | 0,41 | 0,52 | 0,41 | 0,58 | 0,52 | 0,58 | 0,72 |
| Fan 230 V/1/50-60 Hz | Air flow | $m^3/h$ | 270 | 250 | 230 | 440 | 360 | 410 | 500 | 480 |
| | Air throw (2) | m | 2,5 | 2,0 | 2,0 | 3,0 | 2,0 | 3,0 | 2,5 | 2,5 |
| | Nb x Ø | mm | 1 x 200 | 1 x 200 | 1 x 200 | 1 x 200 | 1 x 200 | 1 x 200 | 1 x 200 | 1 x 200 |
| | | tr/min | 1500 | 1500 | 1500 | 3000 | 1500 | 3000 | 3000 | 3000 |
| | 230V/1/50Hz | W total | 43 | 43 | 43 | 80 | 43 | 80 | 80 | 80 |
| | | A total | 0,25 | 0,25 | 0,25 | 0,50 | 0,25 | 0,50 | 0,50 | 0,50 |
| Electric defrost E1K (3) | Nb | | 1 | 1 | 1 | 1 | 1 | 1 | 1 | 1 |
| | 230V/1/50Hz | W total | 400 | 400 | 400 | 400 | 600 | 400 | 600 | 600 |
| | | A total | 1,8 | 1,8 | 1,8 | 1,8 | 2,7 | 1,8 | 2,7 | 2,7 |
| Net weight | | kg | 7,4 | 7,7 | 8,0 | 7,7 | 9,5 | 8,0 | 9,5 | 10,0 |
| Dimensions | D | mm | 399 | 399 | 399 | 399 | 560 | 399 | 560 | 560 |
| | Y | mm | 330 | 330 | 330 | 330 | 485 | 330 | 485 | 485 |
| Connections | Inlet | Ø ODF (4) | 3/8" 10 mm | 3/8" 10 mm | 3/8" 10 mm | 3/8" 10 mm | 3/8" 10 mm | 3/8" 10 mm | 3/8" 10 mm | 3/8" 10 mm |
| | Outlet | Ø ODF (4) | 3/8" 10 mm | 3/8" 10 mm | 3/8" 10 mm | 3/8" 10 mm | 3/8" 10 mm | 3/8" 10 mm | 3/8" 10 mm | 3/8" 10 mm |
| Options | | E1K | O | O | O | O | O | O | O | O |

*(1) See page 10.*
*(2) When the size allows circulation of air (see CECOMAF GT 6001, DIN8955, ENV328).*
*(3) ATTENTION use in SC3 for ceiling mounting only: Use of E1K kit compulsory.*
*(4) ODF: Female to receive a tube of the same diameter.*

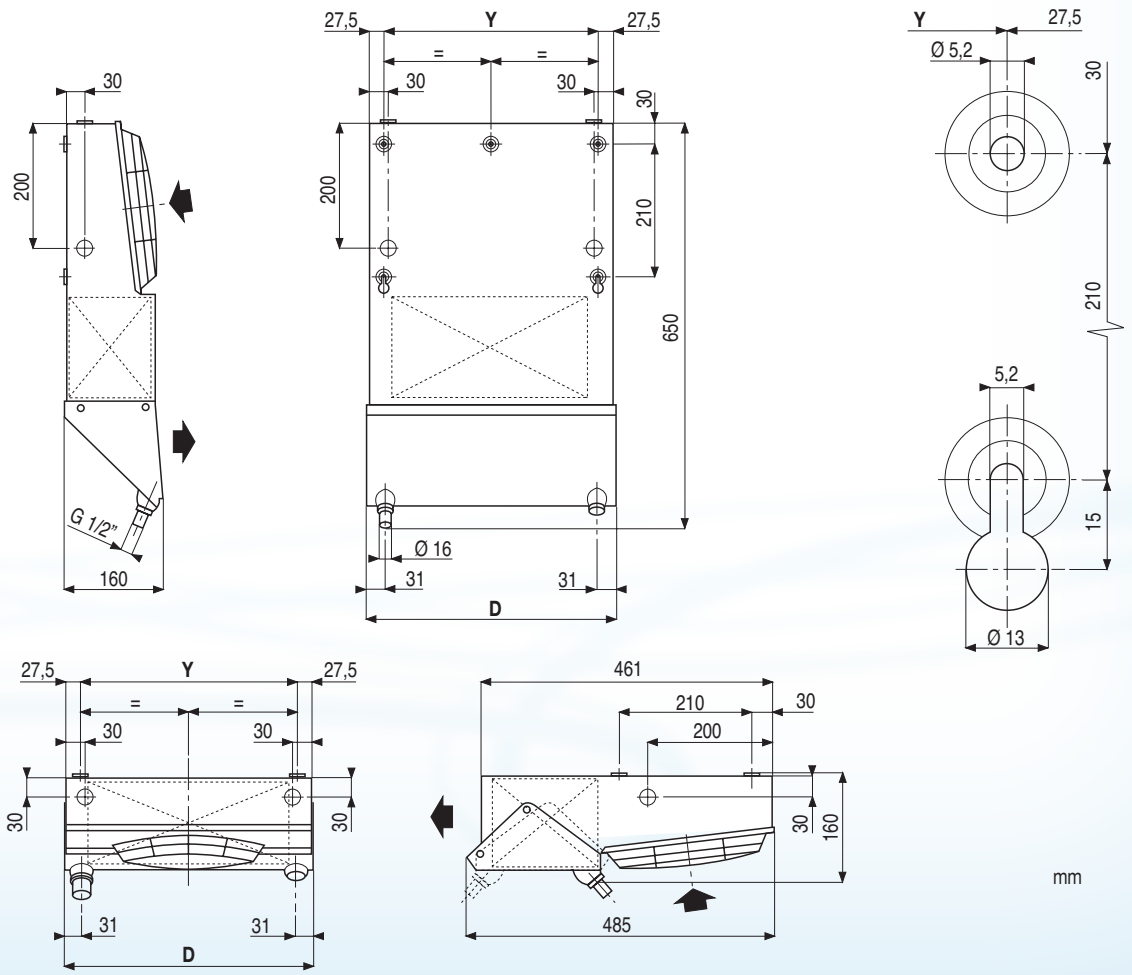

HEATCRAFT
Worldwide Refrigeration

# Ceiling unit cooler

## MF/MFE commercial range

- The MF range is designed for use in refrigerated cabinets, bars, under-counter unit and small storage cold rooms: hygiene and compactness.
- CETIM conformity certificate: hygiene standard EN 1672-2.
- ABS casing with rounded corners, drainage incorporated to avoid all condensation retention zones.
- Minimal depth (150 mm) for optimum use of storage space in the cold room.
- Wall mounting possible.

ABS 7

Certificate of conformity cetim "Hygiene & Security"

190 ▁▂▃▅▆ 790 W

FRIGA-BOHN HYFRA PEDIA HK REFRIGERATION

Heatcraft reserves itself the right to make changes at any time without preliminary notice - Photos non-contractual

# MF / MFE - Commercial ceiling unit cooler

## Market segments

*FFS Bars - Restaurants – Corner shops – Mini-markets*

## Designation

**MFE**(1) **3**(2)

(1) **MF** = chill temp. models without defrost
**MFE** = low temp. models with defrost
(2) Number of fans

## Certifications

*Range not concerned by Eurovent certification.*

## Description

### Casing

- Anti-corrosion casing, fan blade and guard.
- Monoblock, anti-shock ABS casing.
- Depth limited to 150 mm, easy installation of expansion valve.
- Polyamide frame on MF(E) 1-2.
- CETIM "Health and safety" conformity certificate (MF 1-2) (compliant with standard EN 1672-2). Rounded corners without condensate retention zones, easy cleaning, reduction of exterior condensation.

### Ventilation

- 4-pole motor(s), polypropylene fan blade (anti-corrosion).
- Anti-corrosion casing, fan blade and guard (photos n° 1 and 2).

### Coil

- Fins with polyester finish.
- Low internal refrigerant volume.

1.

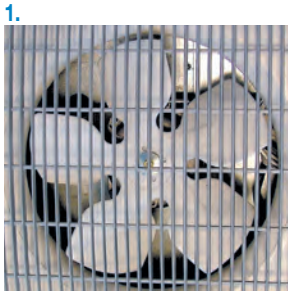

2.

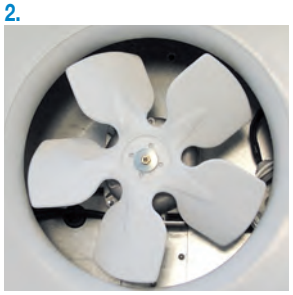

3.

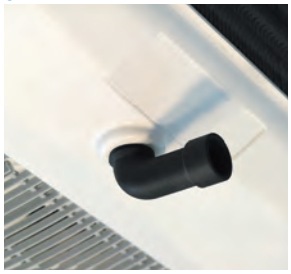

4.

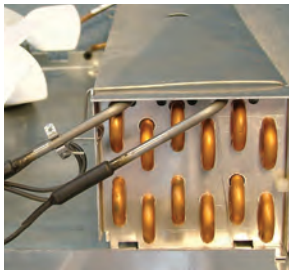

## Advantages

| Installation |
|---|
| EMA kit on MF1 and MF2 for wall mounting (not to be used on MFE 1-2). |
| Flexible, directional and compact drain fitting (photo n°3). |
| Motor wired to terminal block as standard. |
| **Servicing / Maintenance** |
| Totally removable casing for easy cleaning; direct access to all components mounted on the top board. |
| The electric heating elements are fitted in slots for easy front removal (model MFE) (photo n°4). |

## Options

| | Kit | Factory |
|---|---|---|
| EMA | | |

Wall kit

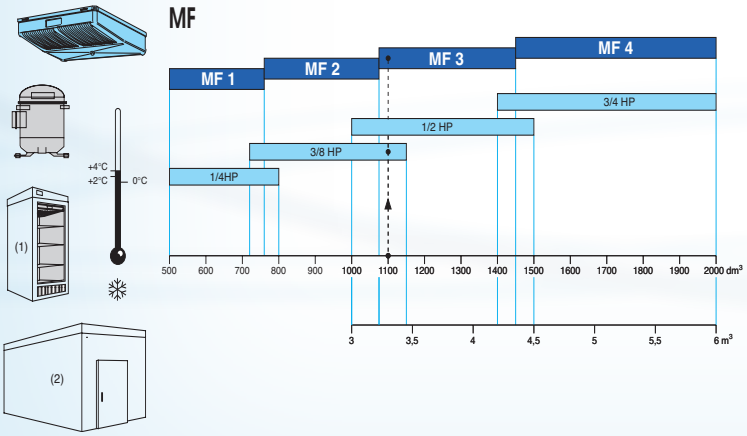


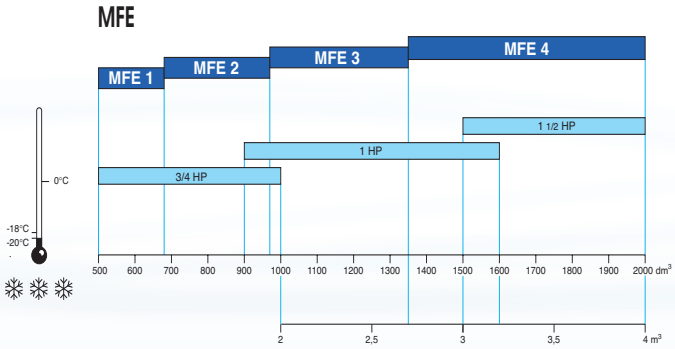


(1) Heavy-duty cabinet
(2) Standard chamber

Data given for information only.

## Example

Volume of unit to be cooled: 1100 dm3/ Temperature: +2°C/Heavy duty
**Selection**: MF 3 (and compressor 3/8 HP)

## MF ...

| | | MF ... | 1 | 2 | 3 | 4 |
|---|---|---|---|---|---|---|
| Capacity R404A (1) | DT1 = 8K - SC 2 | W | 350 | 400 | 750 | 790 |
| Surface | | $m^2$ | 1,10 | 1,38 | 2,32 | 2,79 |
| Circuit volume | | $dm^3$ | 0,265 | 0,335 | 0,530 | 0,640 |
| Fan (3) 230 V/1/50-60 Hz 1,500 rpm. | Air flow | $m^3/h$ | 270 | 250 | 460 | 430 |
| | Air throw (2) | m | 3,5 | 3,0 | 6,0 | 5,5 |
| | Ø 200 mm | Nb | 1 | 1 | 2 | 2 |
| | 230 V/1/50 Hz | W total | 38 | 38 | 76 | 76 |
| | | A total | 0,33 | 0,33 | 0,66 | 0,66 |
| Net weight | | kg | 3,9 | 4,1 | 8,3 | 8,6 |
| **Kit :** Wall mounting kit | | EMA | O | O | - | - |

## MFE ...

| | | MFE ... | 1 | 2 | 3 | 4 |
|---|---|---|---|---|---|---|
| Capacity R404A (1) | DT1 = 7K - SC 3 | W | 270 | 320 | 580 | 640 |
| | DT1 = 6K - SC 4 | W | 190 | 240 | 430 | 450 |
| Surface | | $m^2$ | 1,10 | 1,38 | 2,32 | 2,79 |
| Circuit volume | | $dm^3$ | 0,265 | 0,335 | 0,530 | 0,640 |
| Fan (3) 230 V/1/50-60 Hz 1,500 rpm. | Air flow | $m^3/h$ | 270 | 250 | 460 | 430 |
| | Air throw (2) | m | 3,5 | 3,0 | 6,0 | 5,5 |
| | Ø 200 mm | Nb | 1 | 1 | 2 | 2 |
| | 230 V/1/50 Hz | W total | 38 | 38 | 76 | 76 |
| | | A total | 0,33 | 0,33 | 0,66 | 0,66 |
| Electric defrost | 230V/1/50 Hz | W | 140 | 160 | 330 | 330 |
| Net weight | | kg | 3,9 | 4,1 | 8,3 | 8,6 |
| **Kit :** Wall mounting kit | | EMA | - | - | - | - |

* Recommended with electric defrost (> MFE).

(1) See page 10.
(2) When the chamber size allows air circulation.
(3) Enclosed motor, class B, impedance-protected, permanently lubricated.

## MF 1-2 / MFE 1-2

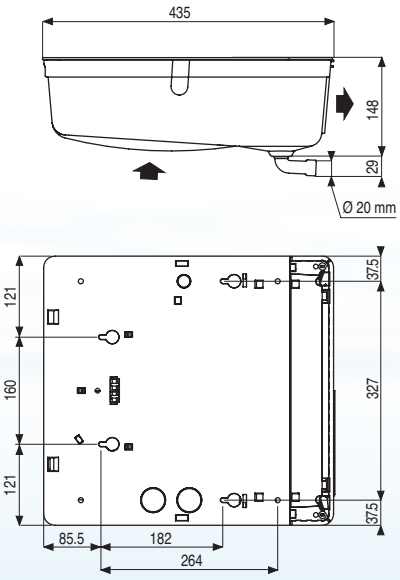


## MF 1-2

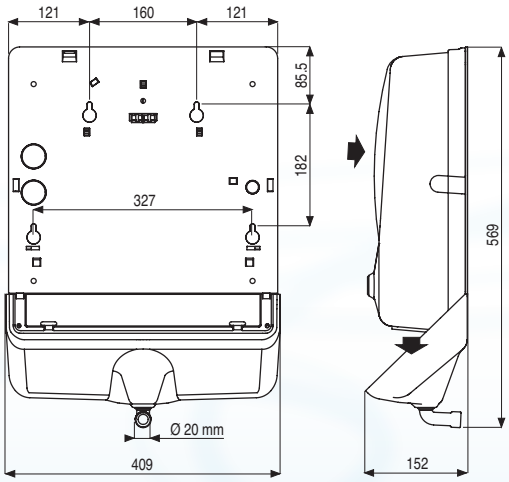


Wall mounting with **EMA** kit for **MF 1-2**

## MF 3-4 / MFE 3-4

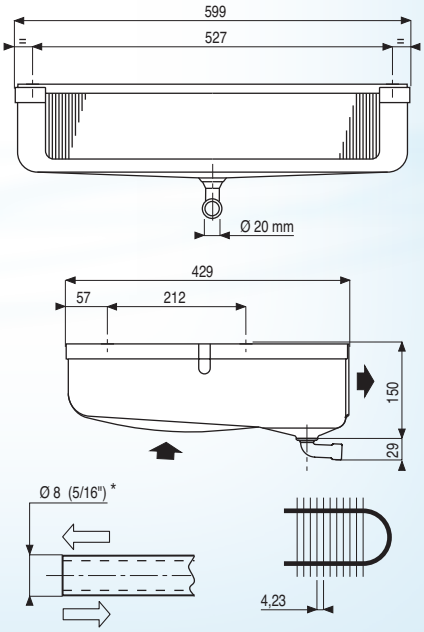

HEATCRAFT™
Worldwide Refrigeration

EUROVENT CERTIFIED PERFORMANCE
www.eurovent-certification.com

E Solutions
Efficiency • Environment

# Ceiling unit cooler

## MR/MRE commercial range

- The 28 models in the MR range meet the requirements of small storage cold rooms.
- Low depth of only 209 mm enabling optimum use of storage space in the cold room.
- Sturdy and corrosion-resistant unit, coils totally anti-corrosion treated as standard, ABS casing and stainless steel screws.

*Natural fluids:*
*Glycol water*
*$CO_2$ (R744)**

ABS
7

** Chill applications - Operating pressure 50 bar*

380 ▁▂▃▅▆ 2620 W

FRIGA-BOHN

HYFRA® PEDIA

HK® REFRIGERATION

Heatcraft reserves itself the right to make changes at any time without preliminary notice - Photos non-contractual

## Market segments

*FFS* *Bars - Restaurants – Corner shops – Mini-markets*
*FSM* *Hard Discount - Supermarkets - Hypermarkets*

## Designation

**MRE**(1) **210**(2) **E**(3)

(1) **MR** = chill temp. models without defrost
**MRE** = low temp. models with defrost
(2) Model
(3) Fin spacing: **R / E** = 4.23 mm - **L / C** = 6.35 mm

## Certifications

## Description

### Casing

- The ABS recyclable casing guarantees a high quality with regard to:
- **Sturdyness**: high thermal (at low and high temperatures) and mechanical shock resistance.
- **Aesthetics**: the design, finish and granulated white casing enable perfect integration of the unit into the surrounding environment.
- **Hygiene**: no condensate retention zones favouring the development of harmful germs thanks to the casing with rounded corners and no corrosive elements (for example: stainless steel fastening screws).
- **Safety**: no sharp or cutting edges.

### Ventilation

- The MR and MRE models are equipped with a 50-60 Hz, Ø 200 mm fan with an enclosed motor, class B, impedance protected, permanently lubricated, connected in a junction box (except for MR 75/65) (photo n°1).
- Fan guards compliant with safety standards.

### Coil

- The highly efficient and compact MR range finned coils are designed with corrugated surface aluminium fins (fin spacing 4.23 or 6.35 mm) and internally grooved copper tubes.
- The coils are supplied via Venturi distributors for models MR 160/140 to MR 270/250 and MRE 135/120 to MRE 270/250.
- The entire MR coil has a polyester paint protection coating, particularly important for corrosive environments (photo n°2).

### Defrost

- The electric heating element is fitted in slots under the coil. This layout considerably simplifies maintenance and guarantees homogenous dispersion of heat over the entire coil. This enables perfect defrosting.
- Condensate is collected in an intermediate drain pan then drained through a large condensation drain fitting (Ø 1" G).

1.

2.

3.

## Advantages

### Installation

The expansion valve may be supplied factory pre-fitted (option DM), as well as fully equipped (option EEC) to help reduce installation time (photo n°3).

### Servicing / Maintenance

The MR range has been designed for easy commissioning, maintenance and cleaning. Casing fitted with polyamide hinges to provide total access to all unit cooler elements (coil, electric fan, defrost heater, connections,...).
These hinges also enable removal of the casing.

The electric heating elements are fitted in slots under the coil offering unimpeded front access which considerably simplify maintenance (MRE).

## Options

| Kit | Factory | |
|---|---|---|
| | | **Coil** |
| | **WCO** | Glycol water, coolant (please contact us for details). |
| | **CO2** | R744 optimization (please contact us for details). |
| | | **Defrost** |
| **E1K** | **E1U** | Light electric defrost: MR...R and MR...L. |
| | **THD** (MRE) | For low temperature cold storage rooms with end of defrost thermostat with single-pole, reversing switch at +12°C (±3 K) and delayed fan start up +2°C (±3 K), supplied with a sensor and fastening bracket. |
| | | **Fully equipped unit coolers** |
| | **DM** | Expansion valve fitted. |
| | **EEC** | Fully equipped unit cooler:<br>- Expansion valve fitted.<br>- Solenoid valve fitted.<br>- Ball valve fitted<br>- Piping pre-fitted with a ball valve (siphoning function provided by the collector). |

## MR ... 4,23 mm

| | | MR ... R | 75 | 110 | 135 | 160 | 180 | 210 | 270 |
|---|---|---|---|---|---|---|---|---|---|
| Capacity R404A (1) | DT1 = 8K - SC 2 | W | 680 | 1070 | 1270 | 1550 | 1860 | 2060 | 2620 |
| Capacity CO2 | DT1 = 8K - SC 2 | W | 575 | 851 | 1139 | 1254 | 1564 | 1783 | 2381 |
| Surface | | $m^2$ | 3,35 | 3,66 | 6,10 | 8,04 | 8,04 | 10,05 | 13,40 |
| Circuit volume | | $dm^3$ | 0,58 | 0,63 | 1,05 | 1,1 | 1,38 | 1,73 | 2,30 |
| Air flow | | $m^3/h$ | 290 | 650 | 580 | 880 | 880 | 870 | 1160 |

## MR ... 6,35 mm

| | | MR ... L | 65 | 100 | 120 | 140 | 170 | 190 | 250 |
|---|---|---|---|---|---|---|---|---|---|
| Capacity R404A (1) | DT1 = 8K - SC 2 | W | 620 | 890 | 1180 | 1370 | 1680 | 1890 | 2440 |
| Capacity CO2 | DT1 = 8K - SC 2 | W | 506 | 702 | 1001 | 1095 | 1369 | 1576 | 2105 |
| Capacity W (4) | DT1 = 8K | W | - | - | 1220 | 1150 | - | 1790 | 2380 |
| Surface | | $m^2$ | 2,32 | 2,53 | 4,22 | 5,56 | 5,56 | 6,96 | 9,27 |
| Circuit volume | | $dm^3$ | 0,58 | 0,63 | 1,05 | 1,10 | 1,38 | 1,73 | 2,30 |
| Air flow | | $m^3/h$ | 310 | 660 | 620 | 960 | 960 | 930 | 1240 |

| | | | | | | | | | |
|---|---|---|---|---|---|---|---|---|---|
| Fan 230 V/1/50-60 Hz 1,500 rpm. | Air throw (2) | m | 3 | 3,7 | 3,5 | 4,1 | 4,1 | 4 | 4,5 |
| | Ø 200 mm | Nb | 1 | 2 | 2 | 3 | 3 | 3 | 4 |
| | 230 V/1/50 Hz | W max | 1 x 38 | 2 x 38 | 2 x 38 | 3 x 38 | 3 x 38 | 3 x 38 | 4 x 38 |
| | | A max (3) | 1 x 0,24 | 2 x 0,24 | 2 x 0,24 | 3 x 0,24 | 3 x 0,24 | 3 x 0,24 | 4 x 0,24 |
| Net weight | | kg | 3 | 8 | 10 | 15 | 15 | 15 | 20 |
| Dimensions | A | mm | 514 | 784 | 784 | 1174 | 1174 | 1174 | 1504 |
| | B | mm | 326 | 596 | 596 | 493 | 493 | 493 | 658 |
| | H | mm | 209 | 227 | 227 | 227 | 227 | 227 | 209 |
| | G | Ø | 1" G | Ø 32 | Ø 32 | Ø 32 | Ø 32 | Ø 32 | 1" G |
| Connections R404A | Inlet | Ø ODF * | 3/8" - 10mm** | 3/8" - 10mm** | 3/8" - 10mm** | D 1/2" *** | D 1/2" *** | D 1/2" *** | D 1/2" *** |
| | Outlet | Ø ODF * | 3/8" - 10mm | 3/8" - 10mm | 3/8" - 10mm | 1/2" - 12 mm | 1/2" - 12 mm | 1/2" - 12 mm | 1/2" - 12 mm |
| Connections CO2 | Inlet | Ø ODF * | 3/8" - 10mm | 3/8" - 10mm | 3/8" - 10mm | 3/8" - 10mm | 3/8" - 10mm | 3/8" - 10mm | 3/8" - 10mm |
| | Outlet | Ø ODF * | 3/8" - 10mm | 3/8" - 10mm | 3/8" - 10mm | 3/8" - 10mm | 3/8" - 10mm | 3/8" - 10mm | 3/8" - 10mm |

*(1) See page 10.*
*(2) When the size allows circulation of air (see CECOMAF GT 6001, DIN8955, ENV328).*
*(3) Setting of overload protection levels. For air temperatures "ti" other than +20 °C, multiply the currents in relation to 293/(273 + "ti") in order to obtain an approximate current value after the chamber temperature is attained.*
*(4) Glycol water: Percentage of glycol = 30% - Fluid inlet temp. = -8°C - Fluid outlet temp. = -4°C - Inlet dry temp. = +2°C - Relative humidity = 85%*

** ODF: Female to receive a tube of the same diameter.*
*** Unions provided for expansion valve to be brazed Ø 1/2" or Ø 12 mm.*
**** Distributor: Ø 1/2" male to be brazed.*

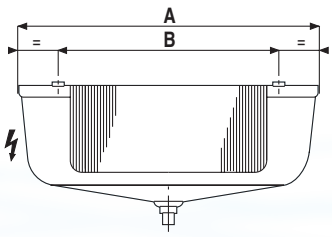


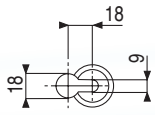


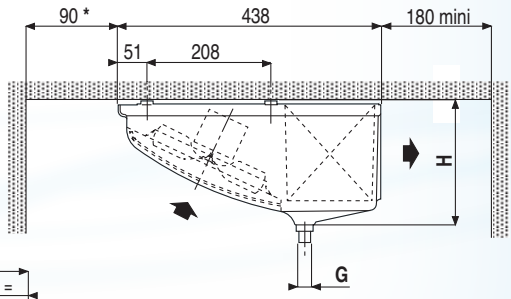


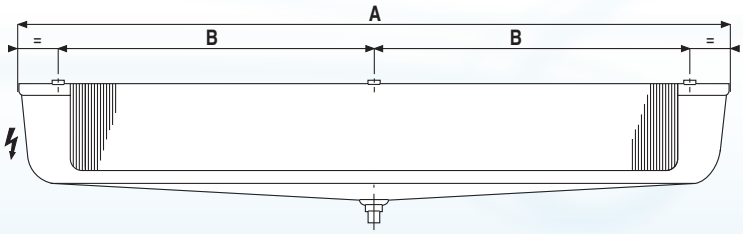


* 90 mini: Casing opening
160 mini: Casing removal

| WCO | CO2 | E1K | E1U | THD | DM | EEC |
|---|---|---|---|---|---|---|
| +👤 | +👤 | O | O | - | O | O |

## MRE ... 4,23 mm

| | | MRE ... E | 75 | 110 | 135 | 160 | 180 | 210 | 270 |
|---|---|---|---|---|---|---|---|---|---|
| Capacity R404A (1) | DT1 = 7K - SC 3 | W | 530 | 820 | 1070 | 1210 | 1440 | 1660 | 2230 |
| | DT1 = 6K - SC 4 | W | 420 | 640 | 840 | 960 | 1140 | 1320 | 1780 |
| Surface | | $m^2$ | 3,35 | 3,66 | 6,10 | 8,04 | 8,04 | 10,05 | 13,40 |
| Circuit volume | | $dm^3$ | 0,58 | 0,63 | 1,05 | 1,1 | 1,38 | 1,73 | 2,30 |
| Air flow | | $m^3/h$ | 290 | 650 | 580 | 880 | 880 | 870 | 1160 |

## MRE ... 6,35 mm

| | | MRE ... C | 65 | 100 | 120 | 140 | 170 | 190 | 250 |
|---|---|---|---|---|---|---|---|---|---|
| Capacity R404A (1) | DT1 = 7K - SC 3 | W | 480 | 670 | 950 | 1080 | 1310 | 1510 | 2030 |
| | DT1 = 6K - SC 4 | W | 380 | 540 | 760 | 850 | 1040 | 1210 | 1630 |
| Surface | | $m^2$ | 2,32 | 2,53 | 4,22 | 5,56 | 5,56 | 6,96 | 9,27 |
| Circuit volume | | $dm^3$ | 0,58 | 0,63 | 1,05 | 1,10 | 1,38 | 1,73 | 2,30 |
| Air flow | | $m^3/h$ | 310 | 660 | 620 | 960 | 960 | 930 | 1240 |

| | | | | | | | | | |
|---|---|---|---|---|---|---|---|---|---|
| Fan 230 V/1/50-60 Hz 1,500 rpm. | Air throw (2) | m | 3 | 3,7 | 3,5 | 4,1 | 4,1 | 4 | 4,5 |
| | Ø 200 mm | Nb | 1 | 2 | 2 | 3 | 3 | 3 | 4 |
| | 230 V/1/50 Hz | W max | 1 x 38 | 2 x 38 | 2 x 38 | 3 x 38 | 3 x 38 | 3 x 38 | 4 x 38 |
| | | A max (3) | 1 x 0,24 | 2 x 0,24 | 2 x 0,24 | 3 X 0,24 | 3 X 0,24 | 3 x 0,24 | 4 x 0,24 |
| Electric defrost | 230 V/1/50 Hz | Nb | 1 | 1 | 1 | 1 | 1 | 1 | 1 |
| | | W | 400 | 440 | 730 | 960 | 960 | 1200 | 1600 |
| | | A | 1,8 | 2,0 | 3,3 | 4,4 | 4,4 | 5,5 | 7,3 |
| Net weight | | kg | 3 | 8 | 10 | 15 | 15 | 15 | 20 |
| Dimensions | A | mm | 514 | 784 | 784 | 1174 | 1174 | 1174 | 1504 |
| | B | mm | 326 | 596 | 596 | 493 | 493 | 493 | 658 |
| | H | mm | 209 | 227 | 227 | 227 | 227 | 227 | 209 |
| | G | Ø | 1" G | Ø 32 | Ø 32 | Ø 32 | Ø 32 | Ø 32 | 1" G |
| Connections R404A | Inlet | Ø ODF * | 3/8" (10 mm)** | 3/8" (10 mm)** | D 1/2" *** | D 1/2" *** | D 1/2" *** | D 1/2" *** | D 1/2" *** |
| | Outlet | Ø ODF * | 3/8" (10 mm) | 3/8" (10 mm) | 1/2" (12 mm) | 5/8" (16 mm) | 5/8" (16 mm) | 5/8" (16 mm) | 3/4" (18 mm) |

*(1) See page 10.*
*(2) When the size allows circulation of air (see CECOMAF GT 6001, DIN8955, ENV328).*
*(3) Setting of overload protection levels. For air temperatures "ti" other than +20 °C, multiply the currents in relation to 293/(273 + "ti") in order to obtain an approximate current value after the chamber temperature is attained.*

** ODF: Female to receive a tube of the same diameter.*
*** Unions provided for expansion valve to be brazed Ø 1/2" or Ø 12 mm.*
**** Distributor: Ø 1/2" male to be brazed.*

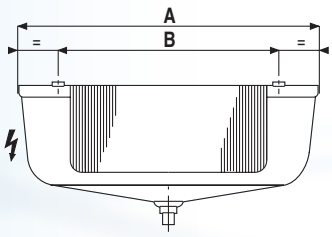


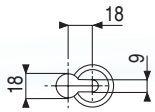


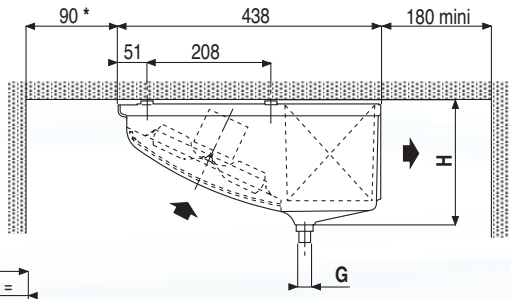


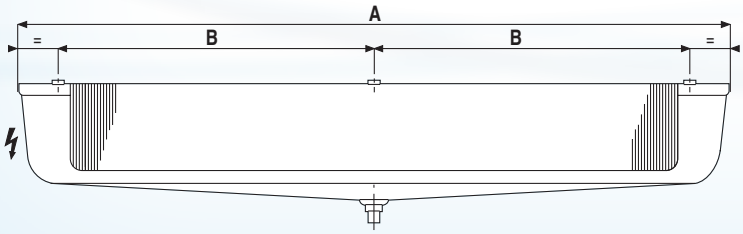


* 90 mini: Casing opening
160 mini: Casing removal

| WCO | CO2 | E1K | E1U | THD | DM | EEC |
|---|---|---|---|---|---|---|
| - | - | - | - | O | O | O |

HEATCRAFT™
Worldwide Refrigeration

EUROVENT CERTIFIED PERFORMANCE
www.eurovent-certification.com

E Solutions
Efficiency • Environment

# Ceiling unit cooler

## MH/MHE commercial range

- The 24 models in the MH range meet the requirements of small storage cold rooms.
- Sturdy casing made of sheet steel with a low depth (228 to 260 mm) enabling optimum use of space in the cold room.
- Excellent air throw up to 17 m.

*Natural fluids:*
*Glycol water*
*$CO_2$ (R744)**

** Chill applications - Operating pressure 50 bar*

1500 ▁▂▃▅▆ 7700 W

FRIGA-BOHN

HYFRA® PEDIA

HK® REFRIGERATION

Heatcraft reserves itself the right to make changes at any time without preliminary notice - Photos non-contractual

# MH / MHE - Commercial ceiling unit cooler

## Market segments

*FFS Bars - Restaurants – Corner shops – Mini-markets*
*FSM Hard Discount - Supermarkets - Hypermarkets*

## Description

### Casing

- Sturdy and sober casing made of white pre-painted sheet steel.
- Its low depth enables optimum use of storage space in the cold room.

### Ventilation

- The MH range is fitted with factory wired axial fans:
Ø 300 mm: 230V 50-60 Hz, single-phase, IP42, class B.
- The fan guards are compliant with safety standards (photo n°1).
- 2 to 4 fans are necessary to cover the requirements of the entire range of capacities.

### Coil

- The highly efficient and compact MH range finned coils are designed with corrugated aluminium fins (fin spacing 4.23 or 6.35 mm) and internally grooved copper tubes.
- The coils are supplied via a Venturi distributor.

### Defrost

- Shielded electric heating elements are inserted in slots both on the front and rear coil faces.
- One of these shielded heating elements is also fastened in slots under the coil.
- The defrost heating elements are factory connected to a terminal block (MHE range only).
230V/1 power supply for all models MHE 320E, 380E and 250C, 310C.
400V/3 power supply for models MHE 460E, 550E, 640E, 770E and 370C, 450C, 510C, 630C.
- This slot assembly guarantees homogenous dispersion of heat over the entire coil.

## Certifications

## Advantages

### Installation

The expansion valve may be supplied factory pre-fitted (option DM), as well as fully equipped (option EEC) to help reduce installation time (photo n°2).

### Servicing / Maintenance

The MH range has been designed for easy commissioning, maintenance and cleaning. The casing is fitted with hinges offering total access to all elements of the ceiling unit cooler (coil, fan, defrost heater, connections,...).

The electric heating elements are fitted in slots under the coil offering unimpeded front access which considerably simplified maintenance.

## Designation

**MHE**(1) **250**(2) **C**(3)

(1) **MH** = chill temp. models without defrost
**MHE** = low temp. models with defrost
(2) Model
(3) Fin spacing: **R / E** = 4.23 mm - **L / C** = 6.35 mm

1.

2.

| Kit | Factory | Options |
|---|---|---|
| | | **Ventilation** |
| | MM6 | Fan 230 V/1/60 (contact us for details). |
| | | **Coil** |
| | BAE | Paint coil protection. |
| | WCO | Glycol water, coolant (please contact us for details). |
| | CO2 | R744 optimization (please contact us for details). |
| | | **Defrost** |
| E1K | E1U | Light electric defrost |
| | THD (MHE) | For low temperature cold storage rooms with end of defrost thermostat with single-pole, reversing switch at +12°C (±3 K) and delayed fan start up +2°C (±3 K), supplied with a sensor and fastening bracket. |
| | | **Fully equipped unit coolers** |
| | DM | Expansion valve fitted. |
| | EEC | Fully equipped unit cooler:<br>- Expansion valve fitted.<br>- Solenoid valve fitted.<br>- Ball valve fitted<br>- Piping pre-fitted with a ball valve (siphoning function provided by the collector). |

## MH ... 4,23 mm

| | | MH ... R | 320 | 380 | 460 | 550 | 640 | 770 |
|---|---|---|---|---|---|---|---|---|
| Capacity R404A (1) | DT1 = 8K - SC 2 | W | 2882 | 3397 | 4365 | 5047 | 6016 | 6937 |
| Capacity CO2 | DT1 = 8K - SC 2 | W | 2818 | 3393 | 4198 | 4945 | 5520 | 6958 |
| Surface | | $m^2$ | 9,73 | 12,98 | 14,60 | 19,47 | 19,61 | 26,15 |
| Circuit volume | | $dm^3$ | 1,67 | 2,23 | 2,51 | 3,34 | 3,37 | 4,49 |
| Air flow | | $m^3/h$ | 2290 | 2070 | 3430 | 3110 | 4600 | 4160 |
| Fan 230 V/1/50-60 Hz 1,500 rpm. | Air throw (2) | m | 16 | 16 | 16 | 16 | 16 | 16 |
| | Ø 300 mm | Nb | 2 | 2 | 3 | 3 | 4 | 4 |
| | 230 V/1/50 Hz | W max | 2x 117 | 2x 117 | 3x 117 | 3x 117 | 4x 117 | 4x 117 |
| | | A max (3) | 2x 0.77 | 2x 0.77 | 3x 0.77 | 3x 0.77 | 4x 0.77 | 4x 0.77 |
| Net weight | | kg | 34 | 35 | 46 | 48 | 54 | 57 |
| Dimensions | A | mm | 1531 | 1531 | 2197 | 2197 | 2499 | 2499 |
| | B | mm | 1372 | 1372 | 2038 | 2038 | 2340 | 2340 |
| | C | mm | 228 | 228 | 228 | 228 | 260 | 260 |
| Connections R404A | Inlet | Ø ODF (4) | D 1/2" | D 1/2" | D 1/2" | D 1/2" | D 5/8" | D 5/8" |
| | Outlet | Ø ODF (4) | 5/8" | 5/8" | 3/4" | 3/4" | 7/8" | 7/8" |
| Connections CO2 | Inlet | Ø ODF (4) | 3/8" | 3/8" | 3/8" | 3/8" | 3/8" | 1/2" (5) |
| | Outlet | Ø ODF (4) | 3/8" | 3/8" | 3/8" | 3/8" | 3/8" | 1/2" |

## MH ... 6,35 mm

| | | MH ... L | 250 | 310 | 370 | 450 | 510 | 630 |
|---|---|---|---|---|---|---|---|---|
| Capacity R404A (1) | DT1 = 8K - SC 2 | W | 2344 | 2846 | 3540 | 4270 | 4748 | 5175 |
| Capacity CO2 | DT1 = 8K - SC 2 | W | 2404 | 2956 | 3588 | 4347 | 4750 | 5635 |
| Capacity W* | DT1 = 8K | W | - | 2660 | - | 3990 | - | 4810 |
| Surface | | $m^2$ | 6,74 | 8,98 | 10,10 | 13,47 | 13,57 | 18,09 |
| Circuit volume | | $dm^3$ | 1,67 | 2,23 | 2,51 | 3,34 | 3,37 | 4,49 |
| Air flow | | $m^3/h$ | 2450 | 2290 | 3680 | 3430 | 4920 | 4590 |
| Fan 230 V/1/50-60 Hz 1,500 rpm. | Air throw (2) | m | 17 | 17 | 17 | 17 | 17 | 17 |
| | Ø 300 mm | Nb | 2 | 2 | 3 | 3 | 4 | 4 |
| | 230 V/1/50 Hz | W max | 2x 117 | 2x 117 | 3x 117 | 3x 117 | 4x 117 | 4x 117 |
| | | A max (3) | 2x 0.77 | 2x 0.77 | 3x 0.77 | 3x 0.77 | 4x 0.77 | 4x 0.77 |
| Net weight | | kg | 34 | 35 | 46 | 48 | 54 | 57 |
| Dimensions | A | mm | 1531 | 1531 | 2197 | 2197 | 2499 | 2499 |
| | B | mm | 1372 | 1372 | 2038 | 2038 | 2340 | 2340 |
| | C | mm | 228 | 228 | 228 | 228 | 260 | 260 |
| Connections R404A | Inlet | Ø ODF (4) | D 1/2" | D 1/2" | D 1/2" | D 1/2" | D 5/8" | D 5/8" |
| | Outlet | Ø ODF (4) | 5/8" | 5/8" | 3/4" | 3/4" | 7/8" | 7/8" |
| Connections CO2 | Inlet | Ø ODF (4) | 3/8" | 3/8" | 3/8" | 3/8" | 3/8" | 3/8" |
| | Outlet | Ø ODF (4) | 3/8" | 3/8" | 3/8" | 3/8" | 3/8" | 3/8" |

*(1) See page 10.*
*(2) Residual air speed: 0.25 m/s, in compliance with standard.*
*(3) Setting of overload protection levels. For air temperatures "ti" other than +20 °C, multiply the currents in relation to 293/(273 + "ti") in order to obtain an approximate current value after the chamber temperature is attained.*
*(4) ODF: Female to receive a tube of the same diameter.*
*(5) Distributor: Male to be brazed.*

** Glycol water: Percent. glycol = 30% - Fluid inlet temp. = -8°C – Fluid outlet temp. = -4°C -Inlet dry temp. = +2°C – relative humidity = 85%.*

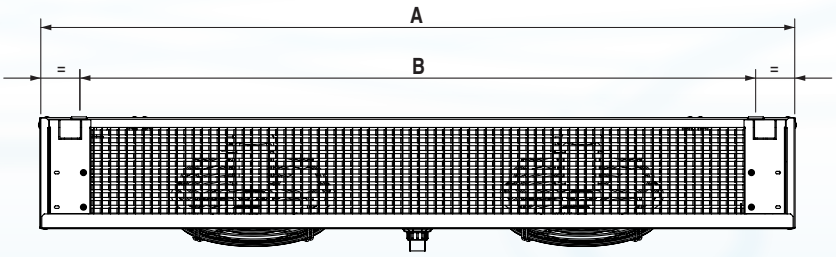


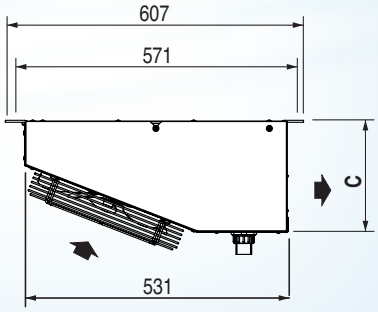


| MM6 | BAE | WCO | CO2 | E1K | E1U | THD | DM | EEC |
|---|---|---|---|---|---|---|---|---|
| +👤 | O | +👤 | +👤 | O | O | - | O | O |

## MHE ... 4,23 mm

| | | MHE ... E | 320 | 380 | 460 | 550 | 640 | 770 |
|---|---|---|---|---|---|---|---|---|
| Capacity R404A (1) | DT1 = 7K - SC 3 | W | 2228 | 2588 | 3123 | 3909 | 4444 | 5220 |
| | DT1 = 6K - SC 4 | W | 1765 | 2069 | 2426 | 3130 | 3508 | 4160 |
| Surface | | $m^2$ | 9,73 | 12,98 | 14,60 | 19,47 | 19,61 | 26,15 |
| Circuit volume | | $dm^3$ | 1,67 | 2,23 | 2,51 | 3,34 | 3,37 | 4,49 |
| Air flow | | $m^3/h$ | 2290 | 2070 | 3430 | 3110 | 4600 | 4160 |
| Fan 230 V/1/50-60 Hz 1,500 rpm. | Air throw (2) | m | 16 | 16 | 16 | 16 | 16 | 16 |
| | Ø 300 mm | Nb | 2 | 2 | 3 | 3 | 4 | 4 |
| | 230 V/1/50 Hz | W max | 2x 117 | 2x 117 | 3x 117 | 3x 117 | 4x 117 | 4x 117 |
| | | A max (3) | 2x 0.77 | 2x 0.77 | 3x 0.77 | 3x 0.77 | 4x 0.77 | 4x 0.77 |
| Electric defrost | Coil | Nb | 2 | 2 | 2 | 2 | 2 | 2 |
| | Drain pan | Nb | 1 | 1 | 1 | 1 | 1 | 1 |
| | | W total | 1800 | 1800 | 2700 | 2700 | 3600 | 3600 |
| | 230 V/1/50Hz | A total | 7,83 (5) | 7,83 (5) | 11,70 | 11,70 | 15,70 | 15,70 |
| | 400 V/3/50Hz | A total | - | - | 3,90 (5) | 3,90 (5) | 5,20 (5) | 5,20 (5) |
| Net weight | | kg | 34 | 35 | 46 | 48 | 54 | 57 |
| Dimensions | A | mm | 1531 | 1531 | 2197 | 2197 | 2499 | 2499 |
| | B | mm | 1372 | 1372 | 2038 | 2038 | 2340 | 2340 |
| | C | mm | 228 | 228 | 228 | 228 | 260 | 260 |
| Connections R404A | Inlet | Ø ODF (4) | D 1/2" | D 1/2" | D 1/2" | D 1/2" | D 5/8" | D 5/8" |
| | Outlet | Ø ODF (4) | 5/8" | 5/8" | 3/4" | 3/4" | 7/8" | 7/8" |

## MHE ... 6,35 mm

| | | MHE ... C | 250 | 310 | 370 | 450 | 510 | 630 |
|---|---|---|---|---|---|---|---|---|
| Capacity R404A (1) | DT1 = 7K - SC 3 | W | 1791 | 2140 | 2610 | 3178 | 3615 | 4401 |
| | DT1 = 6K - SC 4 | W | 1439 | 1702 | 2059 | 2637 | 2889 | 3529 |
| Surface | | $m^2$ | 6,74 | 8,98 | 10,10 | 13,47 | 13,57 | 18,09 |
| Circuit volume | | $dm^3$ | 1,67 | 2,23 | 2,51 | 3,34 | 3,37 | 4,49 |
| Air flow | | $m^3/h$ | 2450 | 2290 | 3680 | 3430 | 4920 | 4590 |
| Fan 230 V/1/50-60 Hz 1,500 rpm. | Air throw (2) | m | 17 | 17 | 17 | 17 | 17 | 17 |
| | Ø 300 mm | Nb | 2 | 2 | 3 | 3 | 4 | 4 |
| | 230 V/1/50 Hz | W max | 2x 117 | 2x 117 | 3x 117 | 3x 117 | 4x 117 | 4x 117 |
| | | A max (3) | 2x 0.77 | 2x 0.77 | 3x 0.77 | 3x 0.77 | 4x 0.77 | 4x 0.77 |
| Electric defrost | Coil | Nb | 2 | 2 | 2 | 2 | 2 | 2 |
| | Drain pan | Nb | 1 | 1 | 1 | 1 | 1 | 1 |
| | | W total | 1800 | 1800 | 2700 | 2700 | 3600 | 3600 |
| | 230 V/1/50Hz | A total | 7,83 (5) | 7,83 (5) | 11,70 | 11,70 | 15,70 | 15,70 |
| | 400 V/3/50Hz | A total | - | - | 3,90 (5) | 3,90 (5) | 5,20 (5) | 5,20 (5) |
| Net weight | | kg | 34 | 35 | 46 | 48 | 54 | 57 |
| Dimensions | A | mm | 1531 | 1531 | 2197 | 2197 | 2499 | 2499 |
| | B | mm | 1372 | 1372 | 2038 | 2038 | 2340 | 2340 |
| | C | mm | 228 | 228 | 228 | 228 | 260 | 260 |
| Connections R404A | Inlet | Ø ODF (4) | D 1/2" | D 1/2" | D 1/2" | D 1/2" | D 5/8" | D 5/8" |
| | Outlet | Ø ODF (4) | 5/8" | 5/8" | 3/4" | 3/4" | 7/8" | 7/8" |

*(1) See page 10.*
*(2) Residual air speed: 0.25 m/s, in compliance with standard.*
*(3) Setting of overload protection levels. For air temperatures "ti" other than +20 °C, multiply the currents in relation to 293/(273 + "ti") in order to obtain an approximate current value after the chamber temperature is attained.*
*(4) ODF: Female to receive a tube of the same diameter.*

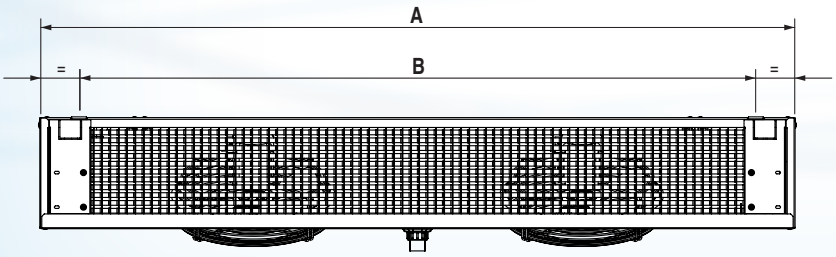


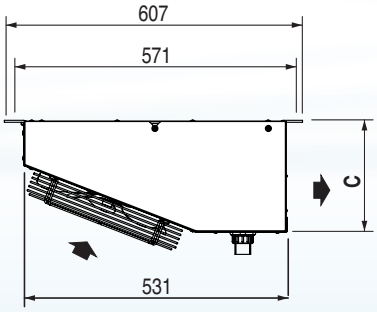


| MM6 | BAE | WCO | CO2 | E1K | E1U | THD | DM | EEC |
|---|---|---|---|---|---|---|---|---|
| +👤 | - | - | - | - | - | O | O | O |

HEATCRAFT™
Worldwide Refrigeration

# Refrigeration cassette

E Solutions
Efficiency • Environment

## KRS/KRS-W commercial range

- KRS direct expansion and glycol water (KRS-W) refrigeration cassettes are compliant with workplace requirements: noise level, hygiene, ventilation and aesthetic quality.
- Vibration damper pads placed under the motor help reduce the noise level.
- Drip tray under the coil and condensate discharge pump.
- 6 motor speeds with 3 pre-wired as standard enabling precise setting of the air flow-rate.
- 4 adjustable deflectors guarantee smooth air distribution in all directions.
- Unit body totally encased in the false ceiling.

Heatcraft reserves itself the right to make changes at any time without preliminary notice - Photos non-contractual

*Low noise level*
*Natural fluids:*
*Glycol water*

ABS
7

1.5 9 kW

FRIGA-BOHN

HYFRA® PEDIA

HK® REFRIGERATION

# KRS / KRS-W - Commercial refrigeration cassette

## Market segments

***FFS*** *Bars - Restaurants – Corner shops – Mini-markets*
***FSM*** *Hard Discount - Supermarkets - Hypermarkets*
***Other:*** *Central kitchens*

## Designation

**KRS**(1)**-W**(2) **1**(3)

(1) Silent refrigeration cassette
(2) **KRS** = direct expansion
**KRS-W** = glycol water
(3) **KRS 1** = casing 600 x 600 mm
**KRS 2** = casing 800 x 800 mm

## Certifications

*Range not concerned by Eurovent certification.*

## Description

### Casing

- The casing of the KRS range is made of double-insulated galvanized sheet steel: inside with a polyurethane shell and on the outside with a thick, closed cell, foam insulating layer.
- Equipped with a drip tray under the coil.

### Diffuser

- Its high aesthetic quality is perfectly adapted to all environments.
- Made of smooth ABS, colour RAL 9003, it has an interior insulation lining to eliminate the risk of condensation.
- A manually adjustable deflector system enables distribution of air in four directions.

### Ventilation

- The KRS range is equipped with 6-speed centrifugal fans with high static pressure and air flow efficiency.
- 3 speeds are factory pre-wired on each model. It is possible to select 3 other intermediate speeds depending on noise level requirements (refer to the table opposite).
- The motors are of the type, single-phase, 230V, 50Hz- Hz, class B with internal thermal overload protection.
- The fan blades are specially designed for this range and provide a high air flow-rate while guaranteeing a low noise level.

### Coil

- The high-performance and compact finned coils are composed of aluminium fins crimped onto copper tubes:

| Aluminium fins | KRS | KRS-W |
|---|---|---|
| Spacing | 2,81 mm | 2,1 mm (KRS-W1)<br>1,81 mm (KRS-W2) |
| Epoxy protection | yes | no |
| Grooved copper tubes | yes | no |

### Condensate discharge pump

- The maximum discharge height is 650 mm in relation to the pump height.

1.
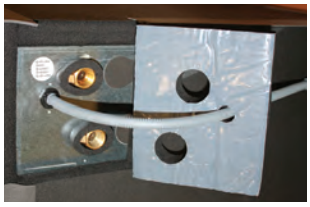

2.

3.

4.

5.

## Advantages

### Installation

The KRS cassettes are delivered with a condensate discharge pump with float switching device.

The pre-cut insulation foam is easy to fit and guarantees total isolation of the casing once all tubes have been connected (photo n°5).

### Servicing / Maintenance

The casing is designed to offer complete access to all components rendering maintenance tasks easier (photo n° 1).

The washable filter clipped onto the diffuser is easily accessible and has a stand-by position for cleaning (photo n° 3).

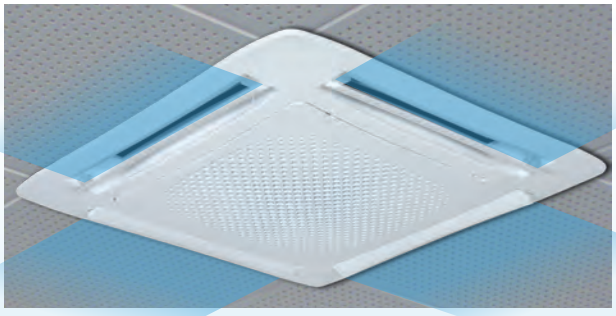

*KRS 1 refrigeration cassette encased in the false ceiling.*

## KRS / KRS-W

| Motor speeds* | | | V1 | - | - | V2 | - | V3 | V1 | - | V2 | - | - | V3 |
|---|---|---|---|---|---|---|---|---|---|---|---|---|---|---|
| | | | ST | NC | NC | ST | NC | ST | ST | NC | ST | NC | NC | ST |
| **Direct expansion** | | | | | | KRS 1 | | | | | KRS 2 | | | |
| Capacity R404A (1) Q0m - HR = 85 % | DT1 = 10K - tA1 = 8°C | kW | 1,5 | 2,0 | 2,1 | 2,4 | 2,7 | 3,3 | 3,3 | 4,0 | 4,9 | 5,5 | 6,1 | 6,6 |
| | DT1 = 12K - tA1 = 12°C | kW | 2,1 | 2,6 | 2,8 | 3,2 | 3,5 | 4,3 | 4,3 | 5,2 | 6,4 | 7,2 | 8,1 | 8,7 |
| Air flow | | $m^3/h$ | 300 | 409 | 453 | 530 | 620 | 850 | 700 | 900 | 1200 | 1400 | 1680 | 1880 |
| Connections | inlet | Ø OD | 3/8" | 3/8" | 3/8" | 3/8" | 3/8" | 3/8" | 3/8" | 3/8" | 3/8" | 3/8" | 3/8" | 3/8" |
| | outlet | Ø OD | 1/2" | 1/2" | 1/2" | 1/2" | 1/2" | 1/2" | 1/2" | 1/2" | 1/2" | 1/2" | 1/2" | 1/2" |
| **Glycol water** (2) | | | | | | KRS-W 1 | | | | | KRS-W 2 | | | |
| Capacity W (1) | DT1 = 10K - tA1 = 12°C | kW | 1,6 | 1,9 | 2,1 | 2,3 | 2,5 | 2,8 | 3,3 | 3,9 | 4,5 | 4,8 | 5,1 | 5,2 |
| Air flow | | $m^3/h$ | 320 | 430 | 500 | 610 | 710 | 880 | 710 | 970 | 1280 | 1500 | 1675 | 1820 |
| Connections | inlet | Ø OD | 1/2" | 1/2" | 1/2" | 1/2" | 1/2" | 1/2" | 3/4" | 3/4" | 3/4" | 3/4" | 3/4" | 3/4" |
| | outlet | Ø OD | 1/2" | 1/2" | 1/2" | 1/2" | 1/2" | 1/2" | 3/4" | 3/4" | 3/4" | 3/4" | 3/4" | 3/4" |
| | | | | | | KRS 1 / KRS-W 1 | | | | | KRS 2 / KRS-W 2 | | | |
| *Acoustic* | Lp (2) | dB(A) | 26 | 33 | 35 | 38 | 42 | 49 | 25 | 31 | 37 | 41 | 44 | 47 |
| | Lw(A) | dB(A) | 40 | 47 | 49 | 52 | 56 | 63 | 39 | 45 | 51 | 55 | 58 | 61 |
| Circuit volume | | $dm^3$ | 2 | 2 | 2 | 2 | 2 | 2 | 4 | 4 | 4 | 4 | 4 | 4 |
| Fans 230V/1/50 Hz | | Num. | 1 | 1 | 1 | 1 | 1 | 1 | 1 | 1 | 1 | 1 | 1 | 1 |
| | | W max | 100 | 100 | 100 | 100 | 100 | 100 | 170 | 170 | 170 | 170 | 170 | 170 |
| | | A max | 0,45 | 0,45 | 0,45 | 0,45 | 0,45 | 0,45 | 0,74 | 0,74 | 0,74 | 0,74 | 0,74 | 0,74 |
| Net weight | casing + diffuser | kg | 28 | 28 | 28 | 28 | 28 | 28 | 46 | 46 | 46 | 46 | 46 | 46 |

* *ST: Motor speeds pre-wired as standard*
*NC: Intermediate motor speeds not wired (for selection of a non-wired speed, an installation technician must make the corresponding connections > refer to installation instructions).*

*(1) The evaporation temperature must not be less than -3°C.*
*(2) Glycol water operating conditions (glycol ethylene 30%) = 0/+4°C.*
*(3) Sound pressure level in dB(A) measured at 2 m, hemispherical measurement surface, line of sight, on a reflective surface, given as an indication only.*

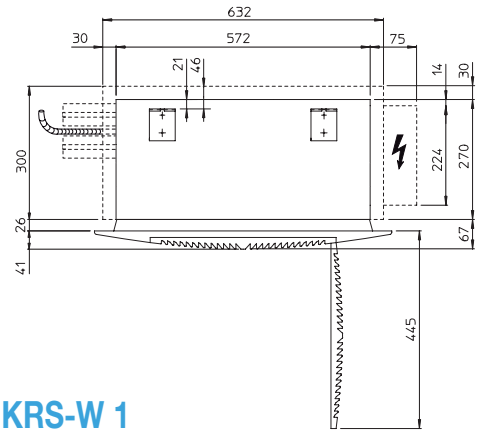


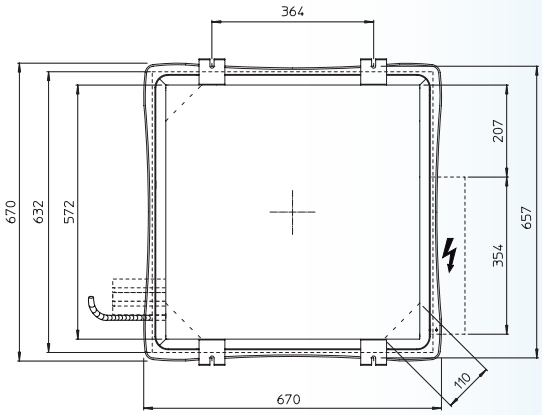


## KRS 1 / KRS-W 1

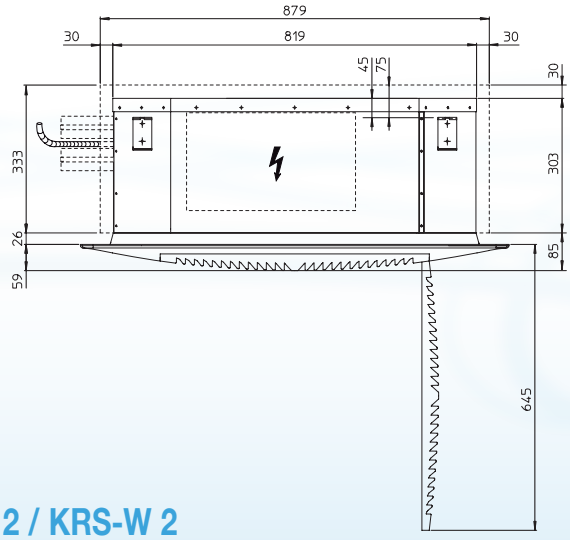


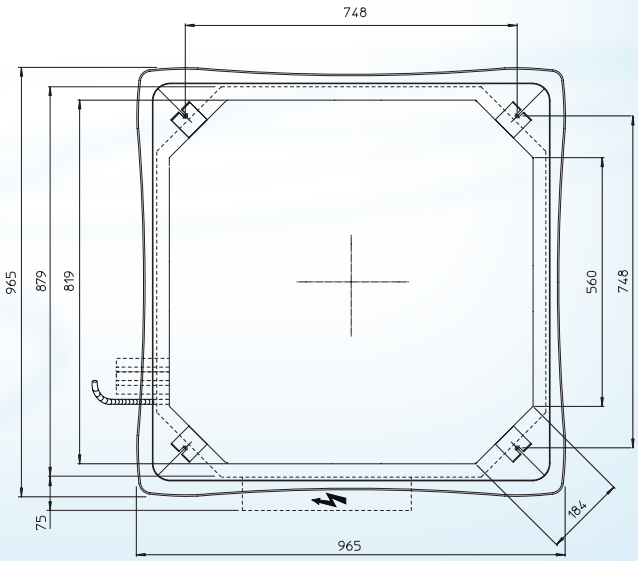


## KRS 2 / KRS-W 2

HEATCRAFT™
Worldwide Refrigeration

# Dual-discharge unit cooler

EUROVENT CERTIFIED PERFORMANCE
www.eurovent-certification.com

E Solutions
Efficiency • Environment

## TA commercial range

- The 40 models in the TA range meet the requirements of laboratories, cutting and work areas, air locks, etc...
- Exceptionally low noise levels with the 6 or 8-pole models.
- The low air flow speed guarantees comfort as well as accurate control of both temperature and hygrometry.
- Optimised air throw up to 12 m.
- Sturdy and corrosion-resistant unit, coils totally anti-corrosion treated as standard, ABS casing and stainless steel screws.
- An intermediate drain pan avoids condensation on the casing.

*Reduced sound*
*Natural fluids:*
*Glycol water, $CO_2$ (R744)**

ABS
7

* Chill applications - Operating pressure 50 bar

2 ... 22 kW

FRIGA-BOHN

HYFRA® PEDIA

HK® REFRIGERATION

Heatcraft reserves itself the right to make changes at any time without preliminary notice - Photos non-contractual

# TA - Commercial dual-discharge unit cooler

## Market segments

*FFS* *Bars - Restaurants – Corner shops – Mini-markets*
*FSM* *Hard Discount - Supermarkets - Hypermarkets*

## Designation

**TA 5**(1) **R**(2) **6P**(3)

(1) Model
(2) Fin spacing: **R** = 3.63 mm – **L** = 6.35 mm
(3) **4P** = 1,500 rpm, **6P** = 1,000 rpm or **8P** = 750 rpm

## Description

### Casing

#### Aesthetics and accessibility

The recyclable ABS casing of the TA guarantees a high level of quality and finish.

#### Sturdiness

Highly resistant to thermal shocks.

#### Aesthetics

The TA unit blends easily into its surroundings thanks to the casing with integrated fan guard.

#### Hygiene

Rounded corners eliminate condensate retention zones which favour the development of harmful germ, use of protected steel sheets and stainless steel screws.
Internal drain pans to avoid condensation on the casing.

#### Safety

No sharp or cutting edges.

### Ventilation

- The TA range is equipped with bell mounted electric fans Ø 350 mm.
- The motors are of the enclosed type, single-phase with a capacitor, 230 V, 50-60 Hz, IP 55, class F and internal overload protection.
- Available in the following versions: 4-pole = 1,500 rpm, 6-pole = 1,000 rpm or 8-pole = 750 rpm, depending upon the admissible noise level.
- The fan guards, incorporated into the casing, are compliant with safety standards.

### Coil

- The highly efficient and compact TA range finned coils are designed with corrugated aluminium fins (fin spacing 3.63 or 6.35 mm) and internally grooved copper tubes.
- The coils are supplied via a Venturi distributor.

## Certifications

## Advantages

### Installation

Simple installation and commissioning with easy access to the expansion valve (see photo).

A condensation evacuation pump may be provided factory-mounted in the casing to help reduce installation time (option **PRK**).

Evacuation of condensation on left or right side.

### Servicing / Maintenance

Hinged drain pan offering easy access to all components (see photo).

The electric heating elements fitted in slots under the coil considerably simplify maintenance tasks (see photo).

## Options

| Kit | Factory | |
|---|---|---|
| | | **Coil** |
| | **BAE** | Paint coil protection. |
| | **BXT** | Blygold Polual XT coil protection. |
| | **WCO** | Glycol water, coolant (please contact us for details). |
| | **CO2** | R744 optimization (please contact us for details). |
| | | **Defrost** |
| | **HGB** | Hot gas coils. |
| **E1K** | **E1U** | Light electric defrost. |
| **2TH** | | **TH 5709L**: end of defrost thermostat with single-pole, reversing switch at +12 °C (±3 °C) and delayed fan start up +2 °C (±3 °C). **THS 5708L**: single-pole thermostat for overheating protection set at +24 °C (±3 °C). Recommended with electric defrost. |
| | | **Fully equipped unit coolers** |
| **PRK** | | Condensate discharge pump. |
| | **DM** | Expansion valve fitted. |
| | **EEC** | Fully equipped unit cooler:<br>- Expansion valve fitted.<br>- Solenoid valve fitted.<br>- Ball valve fitted.<br>- Piping pre-fitted with a ball valve (siphoning function provided by the collector). |

## TA ... R 4P - 1,500 rpm — 3,63 mm

| | | TA ... R 4P | 1 | 2 | 3 | 4 | 5 | 6 | 7 |
|---|---|---|---|---|---|---|---|---|---|
| Capacity R404A (1) | DT1 = 10 K - SC 1 | kW | 5,20 | 7,97 | 9,87 | 10,78 | 14,97 | 18,34 | 21,86 |
| | DT1 = 8 K - SC 2 | kW | 3,38 | 5,31 | 6,53 | 7,00 | 9,93 | 12,18 | 14,42 |
| Acoustic | Lp 4 m (2) | dB(A) | 39 | 42 | 42 | 42 | 44 | 44 | 45 |
| Surface | | $m^2$ | 15,23 | 15,23 | 22,84 | 30,45 | 34,26 | 57,10 | 60,91 |
| Circuit volume | | $dm^3$ | 2,23 | 2,23 | 3,35 | 4,46 | 5,02 | 8,36 | 8,92 |
| Fan Ø 350 mm 230 V/1/50-60 Hz | | Nb | 1 | 2 | 2 | 2 | 3 | 3 | 4 |
| | Air flow | $m^3/h$ | 1995 | 4390 | 4170 | 3985 | 6255 | 5755 | 7975 |
| | Air throw (3) | m | 2 x 10 | 2 x 12 | 2 x 11 | 2 x 10 | 2 x 11 | 2 x 10 | 2 x 10 |
| | 230 V/1/50 Hz | W max | 1 x 220 | 2 x 220 | 2 x 220 | 2 x 220 | 3 x 220 | 3 x 220 | 4 x 220 |
| | | A max | 1 x 1,10 | 2 x 1,10 | 2 x 1,10 | 2 x 1,10 | 3 x 1,10 | 3 x 1,10 | 4 x 1,10 |
| Electric defrost E1K (4) | 230 V/1/50 Hz | W total | 800 | 800 | 1200 | 1600 | 1800 | 3000 | 3200 |
| | | A total | 3,5 | 3,5 | 5,2 | 7,0 | 7,8 | 13,0 | 14,0 |
| | 400 V/3/50 Hz | W total | - | - | - | - | - | 3000 | 3200 |
| | | A total | - | - | - | - | - | 6,5 | 6,9 |
| Net weight | | kg | 22,6 | 24,5 | 27,6 | 32,9 | 36,4 | 45,3 | 54,7 |

## TA ... L 4P - 1,500 rpm — 6,35 mm

| | | TA ... L 4P | 1 | 2 | 3 | 4 | 5 | 6 | 7 |
|---|---|---|---|---|---|---|---|---|---|
| Capacity R404A (1) | DT1 = 10 K - SC 1 | kW | 4,48 | 7,30 | 8,53 | 9,27 | 10,26 | 14,92 | 18,84 |
| | DT1 = 8 K - SC 2 | kW | 2,92 | 4,89 | 5,66 | 6,08 | 6,75 | 10,01 | 12,45 |
| Capacity W* | DT1 = 10 K (a) | kW | 4,83 | - | - | 9,84 | - | 15,62 | 20,02 |
| | DT1 = 8 K (b) | kW | 3,14 | - | - | 6,50 | - | 10,53 | 13,20 |
| Acoustic | Lp 4 m (2) | dB(A) | 39 | 42 | 42 | 42 | 44 | 44 | 45 |
| Surface | | $m^2$ | 11,33 | 13,60 | 18,13 | 22,66 | 20,40 | 33,99 | 45,32 |
| Circuit volume | | $dm^3$ | 2,79 | 3,35 | 4,46 | 5,58 | 5,02 | 8,36 | 11,15 |
| Fan Ø 350 mm 230 V/1/50-60 Hz | | Nb | 1 | 2 | 2 | 2 | 3 | 3 | 4 |
| | Air flow | $m^3/h$ | 2025 | 4345 | 4185 | 4045 | 6515 | 6070 | 8095 |
| | Air throw (3) | m | 2 x 11 | 2 x 12 | 2 x 11 | 2 x 11 | 2 x 12 | 2 x 11 | 2 x 11 |
| | 230 V/1/50 Hz | W max | 1 x 220 | 2 x 220 | 2 x 220 | 2 x 220 | 3 x 220 | 3 x 220 | 4 x 220 |
| | | A max | 1 x 1,10 | 2 x 1,10 | 2 x 1,10 | 2 x 1,10 | 3 x 1,10 | 3 x 1,10 | 4 x 1,10 |
| Electric defrost E1K (4) | 230 V/1/50 Hz | W total | 800 | 800 | 1200 | 1600 | 1800 | 3000 | 3200 |
| | | A total | 3,5 | 3,5 | 5,2 | 7,0 | 7,8 | 13,0 | 14,0 |
| | 400 V/3/50 Hz | W total | - | - | - | - | - | 3000 | 3200 |
| | | A total | - | - | - | - | - | 6,5 | 6,9 |
| Net weight | | kg | 21,1 | 26,9 | 29,6 | 32,2 | 35,3 | 43,6 | 58,1 |

| | | TA ... 4P | 1 | 2 | 3 | 4 | 5 | 6 | 7 |
|---|---|---|---|---|---|---|---|---|---|
| Dimensions | A | mm | 872 | 1372 | 1372 | 1372 | 1872 | 1872 | 2372 |
| | H | mm | 17,5 | 17,5 | 17,5 | 17,5 | 35 | 35 | 35 |
| | X | mm | 560 | 1060 | 1060 | 1060 | 1560 | 1560 | 2060 |
| Connections R404A | Inlet | Ø (5) | D 5/8" | D 5/8" | D 5/8" | D 5/8" | D 5/8" | D 5/8" | D 5/8" |
| | Outlet | Ø ODF (6) | 5/8" | 5/8" | 7/8" | 7/8" | 7/8" | 1 1/8" | 1 1/8" |

*(1) See page 10.*
*(2) Average sound pressure level in dB(A) measured at 4 m, at fan height, in direct line of sight on a reflective surface, given for information only..*
*(3) Residual air speed: 0.25 m/s, in compliance with standard.*
*(4) Electric defrost option.*
*(5) Distributor: 5/8" to be brazed.*
*(6) ODF: Female to receive a tube of the same diameter.*

** Glycol water:*
*(a) EG Percent. glycol = 30% - Fluid inlet temp. = -2°C – Fluid outlet temp. = +2°C*
*Inlet dry temp. = +10°C - relative humidity = 85%*
*(b) EG Percent. glycol = 30% - Fluid inlet temp. = -8°C – Fluid outlet temp. = -4°C*
*Inlet dry temp. = +2°C - relative humidity = 85%*
*Other conditions: please contact us.*

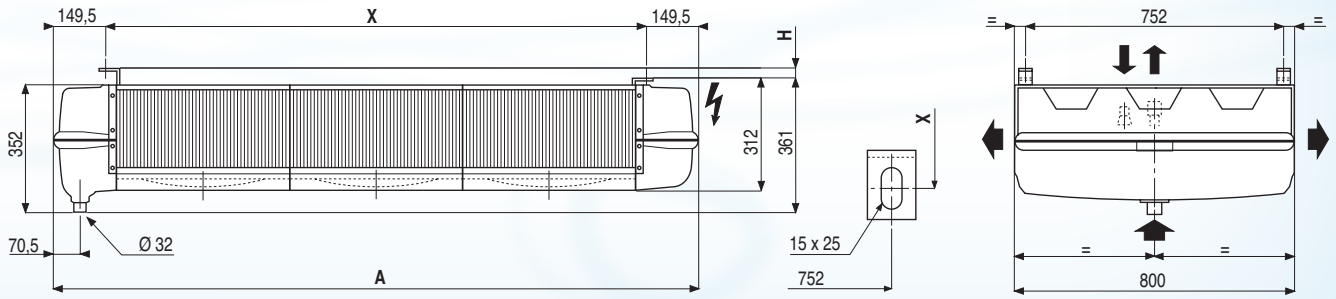


| BAE | BXT | WCO | CO2 | PRC | HGB | E1K | E1U | 2TH | DM | EEC |
|---|---|---|---|---|---|---|---|---|---|---|
| O | O | | - | O | O | O | O | O | O | O |

## TA ... R 6P - 1,000 rpm — 3,63 mm

| | | TA ... R 6P | 1 | 2 | 3 | 4 | 5 | 6 | 7 |
|---|---|---|---|---|---|---|---|---|---|
| Capacity R404A (1) | DT1 = 10 K - SC 1 | kW | 3,93 | 6,09 | 7,46 | 8,06 | 11,26 | 13,21 | 16,32 |
| | DT1 = 8 K - SC 2 | kW | 2,61 | 4,09 | 4,99 | 5,37 | 7,55 | 8,89 | 10,90 |
| Acoustic | Lp 4 m (2) | dB(A) | 29 | 32 | 32 | 32 | 34 | 34 | 35 |
| Surface | | $m^2$ | 15,23 | 15,23 | 22,84 | 30,43 | 34,26 | 57,10 | 60,91 |
| Circuit volume | | $dm^3$ | 2,23 | 2,23 | 3,35 | 4,46 | 5,02 | 8,36 | 8,92 |
| Fan Ø 350 mm 230 V/1/50-60 Hz | | Nb | 1 | 2 | 2 | 2 | 3 | 3 | 4 |
| | Air flow | $m^3/h$ | 1310 | 2910 | 2750 | 2615 | 4125 | 3765 | 5230 |
| | Air throw (3) | m | 2 x 7 | 2 x 7 | 2 x 7 | 2 x 7 | 2 x 7 | 2 x 6 | 2 x 7 |
| | 230 V/1/50 Hz | W max | 1 x 120 | 2 x 120 | 2 x 120 | 2 x 120 | 3 x 120 | 3 x 120 | 4 x 120 |
| | | A max | 1 x 0,60 | 2 x 0,60 | 2 x 0,60 | 2 x 0,60 | 3 x 0,60 | 3 x 0,60 | 4 x 0,60 |
| Electric defrost E1K (4) | 230 V/1/50 Hz | W total | 800 | 800 | 1200 | 1600 | 1800 | 3000 | 3200 |
| | | A total | 3,5 | 3,5 | 5,2 | 7,0 | 7,8 | 13,0 | 14,0 |
| | 400 V/3/50 Hz | W total | - | - | - | - | - | 3000 | 3200 |
| | | A total | - | - | - | - | - | 6,5 | 6,9 |
| Net weight | | kg | 22,6 | 24,5 | 27,6 | 32,9 | 36,4 | 45,3 | 54,7 |

## TA ... L 6P - 1,000 rpm — 6,35 mm

| | | TA ... L 6P | 1 | 2 | 3 | 4 | 5 | 6 | 7 |
|---|---|---|---|---|---|---|---|---|---|
| Capacity R404A (1) | DT1 = 10 K - SC 1 | kW | 3,43 | 5,55 | 6,47 | 7,01 | 8,02 | 10,98 | 14,18 |
| | DT1 = 8 K - SC 2 | kW | 2,28 | 3,76 | 4,35 | 4,67 | 5,35 | 7,45 | 9,53 |
| Capacity W* | DT1 = 10 K (a) | kW | 3,30 | - | - | 8,09 | - | 12,48 | 16,40 |
| | DT1 = 8 K (b) | kW | 2,60 | - | - | 5,30 | - | 8,36 | 10,76 |
| Acoustic | Lp 4 m (2) | dB(A) | 29 | 32 | 32 | 32 | 34 | 34 | 35 |
| Surface | | $m^2$ | 11,33 | 13,60 | 18,13 | 22,66 | 20,40 | 33,99 | 45,32 |
| Circuit volume | | $dm^3$ | 2,79 | 3,35 | 4,46 | 5,58 | 5,02 | 8,36 | 11,15 |
| Fan Ø 350 mm 230 V/1/50-60 Hz | | Nb | 1 | 2 | 2 | 2 | 3 | 3 | 4 |
| | Air flow | $m^3/h$ | 1330 | 2875 | 2760 | 2660 | 4315 | 3990 | 5315 |
| | Air throw (3) | m | 2 x 7 | 2 x 7 | 2 x 7 | 2 x 7 | 2 x 7 | 2 x 7 | 2 x 7 |
| | 230 V/1/50 Hz | W max | 1 x 120 | 2 x 120 | 2 x 120 | 2 x 120 | 3 x 120 | 3 x 120 | 4 x 120 |
| | | A max | 1 x 0,60 | 2 x 0,60 | 2 x 0,60 | 2 x 0,60 | 3 x 0,60 | 3 x 0,60 | 4 x 0,60 |
| Electric defrost E1K (4) | 230 V/1/50 Hz | W total | 800 | 800 | 1200 | 1600 | 1800 | 3000 | 3200 |
| | | A total | 3,5 | 3,5 | 5,2 | 7,0 | 7,8 | 13,0 | 14,0 |
| | 400 V/3/50 Hz | W total | - | - | - | - | - | 3000 | 3200 |
| | | A total | - | - | - | - | - | 6,5 | 6,9 |
| Net weight | | kg | 21,1 | 26,9 | 29,6 | 32,2 | 35,3 | 43,6 | 58,1 |

| | | TA ... 6P | 1 | 2 | 3 | 4 | 5 | 6 | 7 |
|---|---|---|---|---|---|---|---|---|---|
| Dimensions | A | mm | 872 | 1372 | 1372 | 1372 | 1872 | 1872 | 2372 |
| | H | mm | 17,5 | 17,5 | 17,5 | 17,5 | 35 | 35 | 35 |
| | X | mm | 560 | 1060 | 1060 | 1060 | 1560 | 1560 | 2060 |
| Connections R404A | Inlet | Ø (5) | D 5/8" | D 5/8" | D 5/8" | D 5/8" | D 5/8" | D 5/8" | D 5/8" |
| | Outlet | Ø ODF (6) | 5/8" | 5/8" | 7/8" | 7/8" | 7/8" | 1 1/8" | 1 1/8" |

*(1) See page 10.*
*(2) Average sound pressure level in dB(A) measured at 4 m, at fan height, in direct line of sight on a reflective surface, given for information only..*
*(3) Residual air speed: 0.25 m/s, in compliance with standard.*
*(4) Electric defrost option.*
*(5) Distributor: 5/8" to be brazed.*
*(6) ODF: Female to receive a tube of the same diameter.*

** Glycol water:*
*(a) EG Percent. glycol = 30% - Fluid inlet temp. = -2°C – Fluid outlet temp. = +2°C*
*Inlet dry temp. = +10°C - relative humidity = 85%*
*(b) EG Percent. glycol = 30% - Fluid inlet temp. = -8°C – Fluid outlet temp. = -4°C*
*Inlet dry temp. = +2°C - relative humidity = 85%*
*Other conditions: please contact us.*

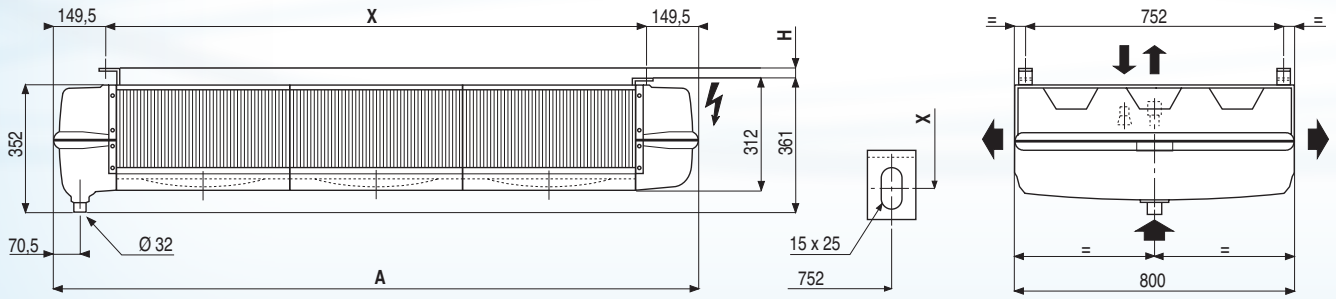


| BAE | BXT | WCO | CO2 | PRC | HGB | E1K | E1U | 2TH | DM | EEC |
|---|---|---|---|---|---|---|---|---|---|---|
| O | O | | - | O | O | O | O | O | O | O |

## TA ... R 8P - 750 rpm — 3,63 mm

| | | TA ... R 8P | 1 | 2 | 3 | 4 | 5 | 6 | 7 |
|---|---|---|---|---|---|---|---|---|---|
| Capacity R404A (1) | DT1 = 10 K - SC 1 | kW | 3,29 | 5,08 | 6,21 | 6,70 | 9,35 | 10,69 | 13,49 |
| | DT1 = 8 K - SC 2 | kW | 2,20 | 3,42 | 4,18 | 4,50 | 6,32 | 7,33 | 9,13 |
| Capacity CO2 | DT1 = 8 K - SC 2 | kW | 2,04 | 2,77 | 3,58 | 4,12 | 5,37 | 6,54 | 7,94 |
| Acoustic | Lp 4 m (2) | dB(A) | 22 | 25 | 25 | 25 | 27 | 27 | 28 |
| Surface | | $m^2$ | 15,23 | 15,23 | 22,84 | 30,45 | 34,26 | 57,10 | 60,91 |
| Circuit volume | | $dm^3$ | 2,23 | 2,23 | 3,35 | 4,46 | 5,02 | 8,36 | 8,92 |
| Fan Ø 350 mm 230 V/1/50-60 Hz | | Nb | 1 | 2 | 2 | 2 | 3 | 3 | 4 |
| | Air flow | $m^3/h$ | 945 | 2100 | 1980 | 1895 | 2975 | 2730 | 3785 |
| | Air throw (3) | m | 2 x 5 | 2 x 6 | 2 x 5 | 2 x 5 | 2 x 5 | 2 x 5 | 2 x 5 |
| | 230 V/1/50 Hz | W max | 1 x 90 | 2 x 90 | 2 x 90 | 2 x 90 | 3 x 90 | 3 x 90 | 4 x 90 |
| | | A max | 1 x 0,40 | 2 x 0,40 | 2 x 0,40 | 2 x 0,40 | 3 x 0,40 | 3 x 0,40 | 4 x 0,40 |
| Electric defrost E1K (4) | 230 V/1/50 Hz | W total | 800 | 800 | 1200 | 1600 | 1800 | 3000 | 3200 |
| | | A total | 3,5 | 3,5 | 5,2 | 7,0 | 7,8 | 13,0 | 14,0 |
| | 400 V/3/50 Hz | W total | - | - | - | - | - | 3000 | 3200 |
| | | A total | - | - | - | - | - | 6,5 | 6,9 |
| Net weight | | kg | 22,6 | 24,5 | 27,6 | 32,9 | 36,4 | 45,3 | 54,7 |

## TA ... L 8P - 750 rpm — 6,35 mm

| | | TA ... L 8P | 1 | - | 3 | 4 | 5 | 6 | 7 |
|---|---|---|---|---|---|---|---|---|---|
| Capacity R404A (1) | DT1 = 10 K - SC 1 | kW | 2,88 | - | 5,40 | 5,86 | 6,79 | - | 11,84 |
| | DT1 = 8 K - SC 2 | kW | 1,93 | - | 3,66 | 3,96 | 4,55 | - | 8,00 |
| Capacity CO2 | DT1 = 8 K - SC 2 | kW | 1,83 | - | 3,28 | 3,69 | 4,12 | - | 7,12 |
| Capacity W* | DT1 = 10 K (a) | kW | 3,34 | - | - | 6,77 | - | 8,51 | 13,66 |
| | DT1 = 8 K (b) | kW | 2,20 | - | - | 4,50 | - | 7,27 | 9,06 |
| Acoustic | Lp 4 m (2) | dB(A) | 22 | - | 25 | 25 | 27 | 27 | 28 |
| Surface | | $m^2$ | 11,33 | - | 18,13 | 22,66 | 20,40 | 33,99 | 45,32 |
| Circuit volume | | $dm^3$ | 2,79 | - | 4,46 | 5,58 | 5,02 | 8,36 | 11,15 |
| Fan Ø 350 mm 230 V/1/50-60 Hz | | Nb | 1 | - | 2 | 2 | 3 | 3 | 4 |
| | Air flow | $m^3/h$ | 960 | - | 1990 | 1920 | 3110 | 2890 | 3845 |
| | Air throw (3) | m | 2 x 5 | - | 2 x 5 | 2 x 5 | 2 x 6 | 2 x 5 | 2 x 5 |
| | 230 V/1/50 Hz | W max | 1 x 90 | - | 2 x 90 | 2 x 90 | 3 x 90 | 3 x 90 | 4 x 90 |
| | | A max | 1 x 0,40 | - | 2 x 0,40 | 2 x 0,40 | 3 x 0,40 | 3 x 0,40 | 4 x 0,40 |
| Electric defrost E1K (4) | 230 V/1/50 Hz | W total | 800 | - | 1200 | 1600 | 1800 | 3000 | 3200 |
| | | A total | 3,5 | - | 5,2 | 7,0 | 7,8 | 13,0 | 14,0 |
| | 400 V/3/50 Hz | W total | - | - | - | - | - | 3000 | 3200 |
| | | A total | - | - | - | - | - | 6,5 | 6,9 |
| Net weight | | kg | 21,1 | - | 29,6 | 32,2 | 35,3 | 43,6 | 58,1 |

| | | TA ... 8P | 1 | 2 | 3 | 4 | 5 | 6 | 7 |
|---|---|---|---|---|---|---|---|---|---|
| Dimensions | A | mm | 872 | 1372 | 1372 | 1372 | 1872 | 1872 | 2372 |
| | H | mm | 17,5 | 17,5 | 17,5 | 17,5 | 35 | 35 | 35 |
| | X | mm | 560 | 1060 | 1060 | 1060 | 1560 | 1560 | 2060 |
| Connections R404A | Inlet | Ø (5) | D 5/8" | D 5/8" | D 5/8" | D 5/8" | D 5/8" | D 5/8" | D 5/8" |
| | Outlet | Ø ODF (6) | 5/8" | 5/8" | 7/8" | 7/8" | 7/8" | 1 1/8" | 1 1/8" |
| Connections CO2 | Inlet | Ø (5) | 1/2" | 1/2" | 1/2" | 1/2" | 1/2" | 1/2" | 1/2" |
| | Outlet | Ø ODF (6) | 1/2" | 1/2" | 1/2" | 1/2" | 1/2" | 1/2" | 1/2" |

*(1) See page 10.*
*(2) Average sound pressure level in dB(A) measured at 4 m, at fan height, in direct line of sight on a reflective surface, given for information only..*
*(3) Residual air speed: 0.25 m/s, in compliance with standard.*
*(4) Electric defrost option.*
*(5) Distributor: Male to be brazed.*
*(6) ODF: Female to receive a tube of the same diameter.*

** Glycol water:*
*(a) EG Percent. glycol = 30% - Fluid inlet temp. = -2°C – Fluid outlet temp. = +2°C Inlet dry temp. = +10°C - relative humidity = 85%*
*(b) EG Percent. glycol = 30% - Fluid inlet temp. = -8°C – Fluid outlet temp. = -4°C Inlet dry temp. = +2°C - relative humidity = 85%*
*Other conditions: please contact us.*

| BAE | BXT | WCO | CO2 | PRC | HGB | E1K | E1U | 2TH | DM | EEC |
|---|---|---|---|---|---|---|---|---|---|---|
| O | O | +👤 | +👤 | O | O | O | O | O | O | O |

HEATCRAFT™
Worldwide Refrigeration

# Cubic unit cooler

EUROVENT CERTIFIED PERFORMANCE
www.eurovent-certification.com

E Solutions
Efficiency • Environment

## MUC/LUC commercial range

- The MUC-LUC range meets the requirements of medium size cold rooms (up to 70 $m^3$).
- New guard design with air stream straighteners guaranteeing excellent air flow up to 30 m.
- The drain pan is designed with rounded corners and a base sloping toward the drain pipe o ensure maximum safety and hygiene.
- Supplied with factory wired fans as standard.

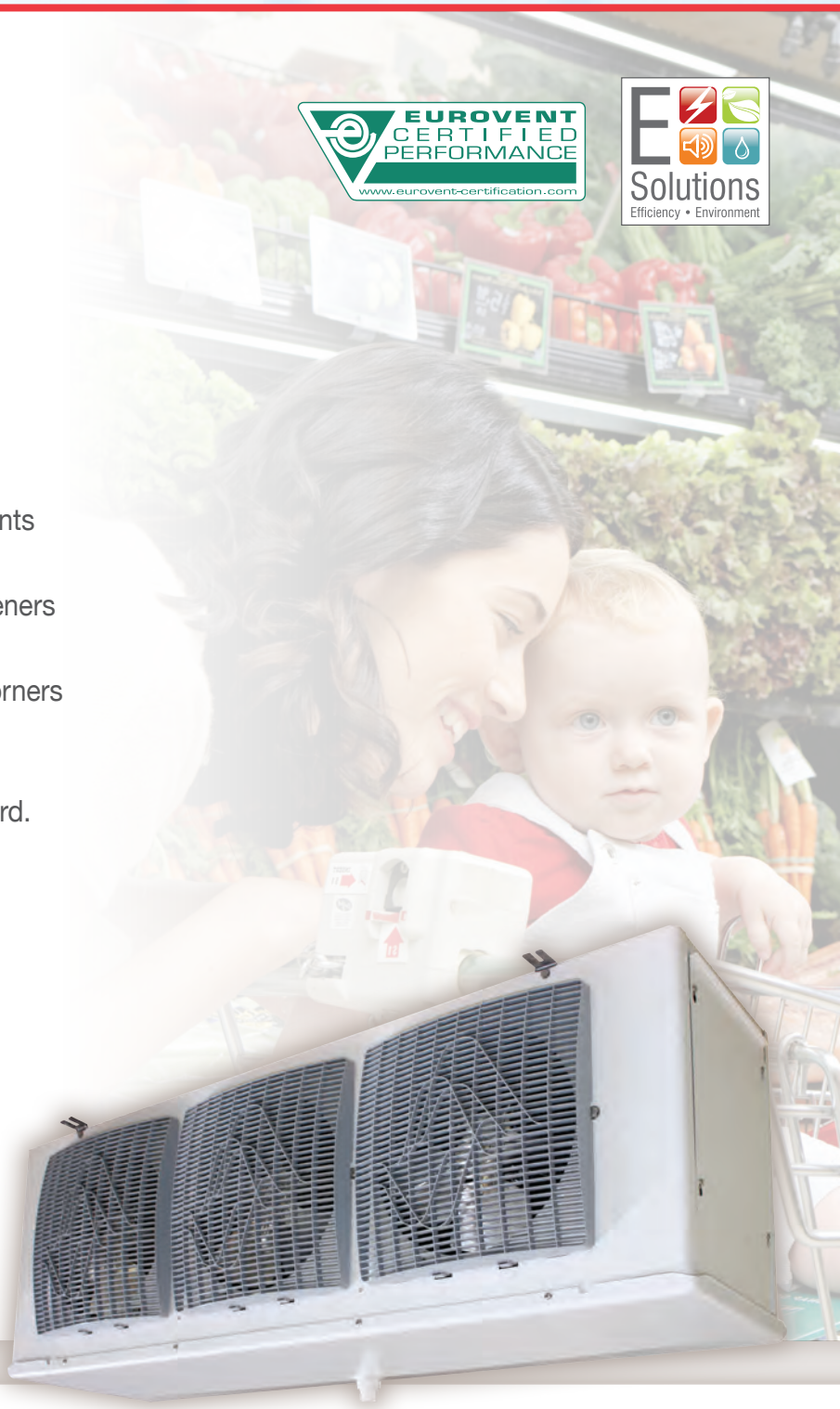

*Natural fluids:*
*Glycol water*
*$CO_2$ (R744)**

** Chill applications - Operating pressure 50 bar*

1 ▁▂▃▅▆ 13.7 kW

FRIGA-BOHN

HYFRA® PEDIA

HK® REFRIGERATION

Heatcraft reserves itself the right to make changes at any time without preliminary notice - Photos non-contractual

# MUC / LUC - Cubic commercial unit cooler

## Market segments

*FFS Bars - Restaurants – Corner shops – Mini-markets*
*FSM Hard Discount - Supermarkets - Hypermarkets*

## Description

### Casing

- Sturdy and aesthetic casing made of white pre-painted sheet steel.
- Drain pan with rounded corners (photo n°1) to eliminate condensate retention zones which favour the development of harmful germs and no sharp or cutting edges to guarantee total safety.

### Ventilation

- MUC-LUC range is fitted with permanently lubricated, axial fans, factory wired:
  **- Ø 300 mm**: standard type, 230 V 50-60 Hz, single-phase, enclosed motor, class B, internal overload protection. New design (photo n°2): plastic fan guard with air stream straighteners guaranteeing maximum air throw in compliance with safety standards.
  **- Ø 450 mm**: standard type, 230-400 V 50-60 Hz, three-phase, enclosed motors with drain holes, IP54, class F, internal overload protections to be connected.
- The plastic guards (Ø 450 mm) are compliant with safety standards.

### Coil

- The highly efficient and compact MUC-LUC range finned coils are designed with corrugated surface aluminium fins (fin spacing 4.23 or 6.35 mm) and internally grooved copper tubes.
- The coils are supplied via a factory fitted diaphragm distributor.

### Defrost

- Shielded electric heating elements are inserted in slots both on the front and rear coil faces (photo n°3).
- One of these elements is fastened in the drain pan.
- The heaters are factory wired on a terminal block in a sealed junction box. 230V /1 power supply for LUC 155 E, 210 E, 295 E and 150 C, 205 C models. 230-400V/3 power supply for LUC 350 E to 841 E and 290 C to 836 C models.
- Condensation is collected in the drain pan then evacuated through a large drain fitting (Ø 1" G).

## Certifications

## Advantages

### Installation

Large space available for easy installation of the expansion valve.

The expansion valve may be supplied factory pre-fitted (option DM), as well as fully equipped (option EEC) to help reduce installation time.

### Servicing / Maintenance

Side panels and drain pan may be easily removed offering fast and easy access to all unit cooler elements (coil, fans, defrost heaters, connections…).

The electric heating elements are fitted in slots under the coil offering unimpeded front access (LUC) (photo n°3).

Large electrical enclosure rendering maintenance tasks easier.

## Designation

# MUC 320(1) R(2)

(2) Model
(3) Fin spacing: **R/E** = 4,23 mm - **L/C** = 6,35 mm

1.
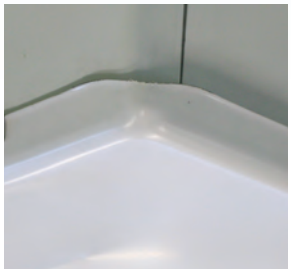

2.

3.
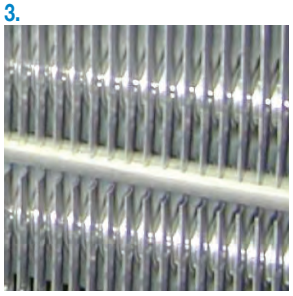

4.

| Kit | Factory | Options |
|---|---|---|
| | | **Ventilation** |
| | M60 | Special-purpose fans for 60 Hz application. |
| | MM5 | Single-phase 230 V 50 Hz fan. |
| | | **Batterie** |
| | BAE | Paint coil protection. |
| | BXT | Blygold Polual XT coil protection. |
| | WCO | Glycol water, coolant (please contact us for details). |
| | CO2 | R744 optimization (please contact us for details). |
| | | **Defrost** |
| | 2TH | 2TH TH 5709L: end of defrost thermostat with single-pole, reversing switch at +12 °C (±3 °C) and delayed fan start up +2 °C (±3 °C). THS 5708L: single-pole thermostat for overheating protection set at +24 °C (±3 °C). Recommended with electric defrost. |
| | HG1 | Defrost with hot gas (LUC) (coil: hot gas, drain pan: electric heating elements). |
| ECK | ECU | Additional electric defrost (drain pan) (LUC). |
| E1K | E1U | Light electric defrost (MUC): heating elements fitted in sleeves (photo n°4) (requiring side space for fitting). |
| ERK | ERU | Reinforced drip tray electrical defrost (recommended for intensive-use, low-temperature applications). |
| | | **Fully equipped unit coolers** |
| | DM | Expansion valve fitted. |
| | EEC | Fully equipped unit cooler:<br>- Expansion valve fitted.<br>- Solenoid valve fitted.<br>- Ball valve fitted.<br>- Copper siphon equipped with a ball valve delivered not fitted. |

## MUC ... R

4,23 mm

| | | MUC ... R | 145 | 200 | 285 | 320 | 420 | 520 | 620 | 640 | 660 | 670 | 781 |
|---|---|---|---|---|---|---|---|---|---|---|---|---|---|
| Capacity R404A (1) | DT1 = 8 K - SC2 | kW | 1,44 | 2,31 | 3,48 | 3,83 | 4,94 | 5,89 | 7,17 | 8,23 | 9,56 | 10,89 | 12,01 |
| Capacity CO2 | DT1 = 8 K - SC2 | kW | 1,52 | 2,00 | 2,85 | 3,27 | 4,12 | 4,93 | 6,00 | 6,73 | 7,35 | 8,29 | 10,75 |
| Surface | | $m^2$ | 5,5 | 8,7 | 10 | 13,4 | 18,2 | 21,4 | 25,8 | 40,2 | 48,7 | 48,7 | 38,6 |
| Circuit volume | | $dm^3$ | 1,1 | 1,8 | 1,9 | 2,6 | 3,5 | 4,0 | 4,8 | 6,9 | 8,3 | 8,3 | 7,2 |
| Air flow | | $m^3/h$ | 1246 | 1239 | 2336 | 2076 | 2562 | 3252 | 3696 | 3264 | 3486 | 4168 | 7895 |
| Fan 50-60 Hz 1500 r.p.m. | Air throw (2) | m | 12 | 12 | 12 | 12 | 12 | 12 | 12 | 12 | 12 | 12 | 30 |
| | Num. x Ø | mm | 1 x 300 | 1 x 300 | 2 x 300 | 2 x 300 | 2 x 300 | 3 x 300 | 3 x 300 | 3 x 300 | 3 x 300 | 4 x 300 | 2 x 450 |
| | 230 V/1/50 Hz | W Total | 145 | 145 | 290 | 290 | 290 | 435 | 435 | 435 | 435 | 580 | - |
| | | A Total | 0,85 | 0,85 | 1,70 | 1,70 | 1,70 | 2,55 | 2,55 | 2,55 | 2,55 | 3,40 | - |
| | 400 V/3/50 Hz | W max | - | - | - | - | - | - | - | - | - | - | 2 x 360 |
| | | A max (3) | - | - | - | - | - | - | - | - | - | - | 2 x 1,0 |
| Electric defrost E1K (4) | | Nb | 3 | 3 | 3 | 3 | 3 | 3 | 3 | 3 | 3 | 3 | 3/6 |
| | | W Total | 420 | 630 | 780 | 960 | 1320 | 1560 | 1860 | 2550 | 3150 | 3150 | 1740/3480 |
| | 230 V/1/50 Hz | A Total | 1,8 | 2,8 | 3,4 | 4,2 | 5,8 | 6,8 | 8,1 | - | - | - | - |
| | 400 V/3/50 Hz | A Total | - | - | - | - | - | - | - | 3,7 | 4,6 | 4,6 | 2,5/5,0 |
| Net weight | | kg | 16 | 18 | 22 | 27 | 32 | 43 | 44 | 56 | 68 | 70 | 73 |
| Dimensions | A | mm | 575 | 575 | 981 | 981 | 1235 | 1355 | 1665 | 1998 | 2348 | 2348 | 1657 |
| | B | mm | 400 | 464 | 400 | 400 | 400 | 464 | 400 | 400 | 400 | 400 | 590 |
| | C | mm | 365 | 365 | 365 | 365 | 365 | 365 | 365 | 365 | 365 | 365 | 482 |
| | D | mm | 355 | 419 | 355 | 355 | 355 | 419 | 352 | 350 | 350 | 350 | 538 |
| | E | mm | 42 | 39 | 89 | 89 | 89 | 89 | 110 | 110 | 110 | 110 | 110 |
| | H | mm | 53 | 53 | 53 | 53 | 53 | 53 | 53 | 53 | 53 | 53 | 78 |
| | K | mm | 456 | 456 | 456 | 456 | 456 | 456 | 456 | 456 | 456 | 456 | 606 |
| | R | mm | 72 | 72 | 122 | 122 | 122 | 182 | 147 | 147 | 147 | 147 | 147 |
| | X | mm | 416 | 416 | 722 | 722 | 976 | 976 | 1356 | 1686 | 2036 | 2036 | 1356 |
| | Y | mm | 412 | 412 | 412 | 412 | 412 | 412 | 412 | 412 | 412 | 412 | 536 |
| Connections R404A | Inlet | Ø (5) | D 1/2" | D 1/2" | D 1/2" | D 1/2" | D 1/2" | D 1/2" | D 1/2" | D 1/2" | D 7/8" | D 7/8" | D 1 1/8'' |
| | Outlet | Ø ODF (6) | 1/2" | 1/2" | 5/8" | 5/8" | 3/4" | 3/4" | 7/8" | 7/8" | 7/8" | 7/8" | 1 3/8" |
| Connections CO2 | Entrée | Ø | 3/8" (6) | 3/8" (6) | 3/8" (6) | 3/8" (6) | 3/8" (6) | 3/8" (6) | 1/2" (5) | 1/2" (5) | 1/2" (5) | 1/2" (5) | 1/2" (5) |
| | Sortie | Ø ODF (6) | 3/8" | 3/8" | 3/8" | 3/8" | 3/8" | 3/8" | 1/2" | 1/2" | 1/2" | 1/2" | 1/2" |

*(1) See page 10.*
*(2) Residual air speed: 0.25 m/s, in compliance with standard.*
*(3) Setting of overload protection levels. For air temperatures "ti" other than +20 °C, multiply the currents in relation to 293/(273 + "ti") in order to obtain an approximate current value after the chamber temperature is attained.*
*(4) Electric defrost option.*
*(5) Distributor: Male to be brazed.*
*(6) ODF: Female to receive a tube of the same diameter.*

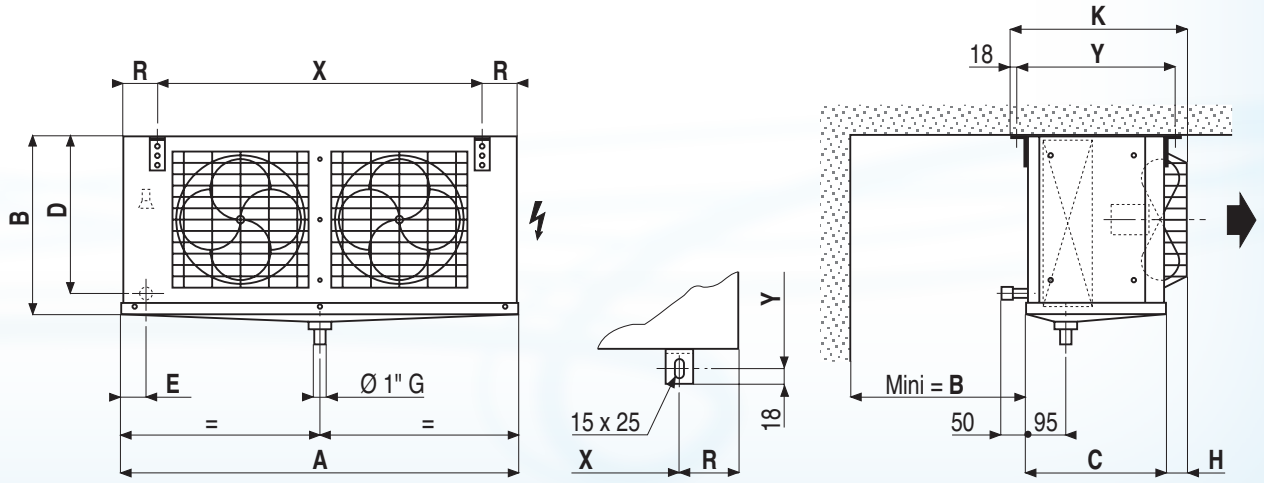


| M60* | MM5* | BAE | BXT | WCO | CO2 | 2TH | HG1 | ECK | ECU | E1K | E1U | ERK | DM | EEC |
|---|---|---|---|---|---|---|---|---|---|---|---|---|---|---|
| O | O | O | O | - | +👤 | O | - | - | - | O | O | - | O | O |

* Only three-phase motors

## MUC ... L

**6,35 mm**

| | | MUC ... L | 140 | 195 | 280 | 315 | 415 | 515 | 615 | 635 | 655 | 665 | 776 |
|---|---|---|---|---|---|---|---|---|---|---|---|---|---|
| Capacity R404A (1) | DT1 = 8 K - SC2 | kW | 1,70 | 2,07 | 3,17 | 3,46 | 4,52 | 5,49 | 6,42 | 6,89 | 7,41 | 9,00 | 10,61 |
| Capacity CO2 | DT1 = 8 K - SC2 | kW | 1,55 | 1,96 | 2,88 | 3,17 | 3,97 | 4,75 | 5,84 | 5,92 | 6,45 | 7,39 | 10,45 |
| Capacity W* | DT1 = 8 K | kW | 1,62 | - | 3,33 | - | 4,53 | - | 6,88 | - | - | 8,38 | - |
| Surface | | $m^2$ | 5,17 | 7,54 | 9,33 | 11,66 | 15,98 | 18,64 | 22,43 | 27,80 | 33,70 | 33,70 | 33,65 |
| Circuit volume | | $dm^3$ | 1,5 | 2,3 | 2,5 | 3,3 | 4,4 | 5,0 | 6,0 | 6,9 | 8,4 | 8,4 | 9 |
| Air flow | | $m^3/h$ | 1217 | 1239 | 2267 | 2075 | 2561 | 3250 | 3694 | 3435 | 3624 | 4436 | 7893 |
| Fan 50-60 Hz 1500 r.p.m. | Air throw (2) | m | 12 | 12 | 12 | 12 | 12 | 12 | 12 | 12 | 12 | 12 | 30 |
| | Num. x Ø | mm | 1 x 300 | 1 x 300 | 2 x 300 | 2 x 300 | 2 x 300 | 3 x 300 | 3 x 300 | 3 x 300 | 3 x 300 | 4 x 300 | 2 x 450 |
| | 230 V/1/50 Hz | W Total | 145 | 145 | 290 | 290 | 290 | 435 | 435 | 435 | 435 | 580 | - |
| | | A Total | 0,85 | 0,85 | 1,70 | 1,70 | 1,70 | 2,55 | 2,55 | 2,55 | 2,55 | 3,40 | - |
| | 400 V/3/50 Hz | W max | - | - | - | - | - | - | - | - | - | - | 2 x 360 |
| | | A max (3) | - | - | - | - | - | - | - | - | - | - | 2 x 1,0 |
| Electric defrost E1K (4) | | Nb | 3 | 3 | 3 | 3 | 3 | 3 | 3 | 3 | 3 | 3 | 3/6 |
| | | W Total | 420 | 630 | 780 | 960 | 1320 | 1560 | 1860 | 2550 | 3150 | 3150 | 1740/3480 |
| | 230 V/1/50 Hz | A Total | 1,8 | 2,8 | 3,4 | 4,2 | 5,8 | 6,8 | 8,1 | - | - | - | - |
| | 400 V/3/50 Hz | A Total | - | - | - | - | - | - | - | 3,7 | 4,6 | 4,6 | 2,5/5,0 |
| Net weight | | kg | 16 | 18 | 22 | 27 | 32 | 43 | 44 | 56 | 68 | 70 | 73 |
| Dimensions | A | mm | 575 | 575 | 981 | 981 | 1235 | 1355 | 1665 | 1998 | 2348 | 2348 | 1657 |
| | B | mm | 400 | 464 | 400 | 400 | 400 | 464 | 400 | 400 | 400 | 400 | 590 |
| | C | mm | 365 | 365 | 365 | 365 | 365 | 365 | 365 | 365 | 365 | 365 | 482 |
| | D | mm | 355 | 419 | 355 | 355 | 355 | 419 | 352 | 350 | 350 | 350 | 538 |
| | E | mm | 42 | 39 | 89 | 89 | 89 | 89 | 110 | 110 | 110 | 110 | 110 |
| | H | mm | 53 | 53 | 53 | 53 | 53 | 53 | 53 | 53 | 53 | 53 | 78 |
| | K | mm | 456 | 456 | 456 | 456 | 456 | 456 | 456 | 456 | 456 | 456 | 606 |
| | R | mm | 72 | 72 | 122 | 122 | 122 | 182 | 147 | 147 | 147 | 147 | 147 |
| | X | mm | 416 | 416 | 722 | 722 | 976 | 976 | 1356 | 1686 | 2036 | 2036 | 1356 |
| | Y | mm | 412 | 412 | 412 | 412 | 412 | 412 | 412 | 412 | 412 | 412 | 536 |
| Connections R404A | Inlet | Ø (5) | D 1/2" | D 1/2" | D 1/2" | D 1/2" | D 1/2" | D 1/2" | D 1/2" | D 1/2" | D 7/8" | D 7/8" | D 1 1/8'' |
| | Outlet | Ø ODF (6) | 1/2" | 1/2" | 5/8" | 5/8" | 3/4" | 3/4" | 7/8" | 7/8" | 7/8" | 7/8" | 1 1/8" |
| Connections CO2 | Inlet | Ø | 3/8" (6) | 3/8" (6) | 3/8" (6) | 3/8" (6) | 3/8" (6) | 3/8" (6) | 1/2" (5) | 1/2" (5) | 1/2" (5) | 1/2" (5) | 1/2" (5) |
| | Outlet | Ø ODF (6) | 3/8" | 3/8" | 3/8" | 3/8" | 3/8" | 3/8" | 1/2" | 1/2" | 1/2" | 1/2" | 1/2" |

*(1) See page 10.*
*(2) Residual air speed: 0.25 m/s, in compliance with standard.*
*(3) Setting of overload protection levels. For air temperatures "ti" other than +20 °C, multiply the currents in relation to 293/(273 + "ti") in order to obtain an approximate current value after the chamber temperature is attained.*
*(4) Electric defrost option.*
*(5) Distributor: Male to be brazed.*
*(6) ODF: Female to receive a tube of the same diameter.*

** Glycol water: Fluid: Percentage of glycol = 30 % - Fluid inlet temperature = -8 °C – Fluid outlet temperature = -4 °C*
*Inlet dry temperature = +2 °C - relative humidity = 85 % - Other conditions: please contact us.*

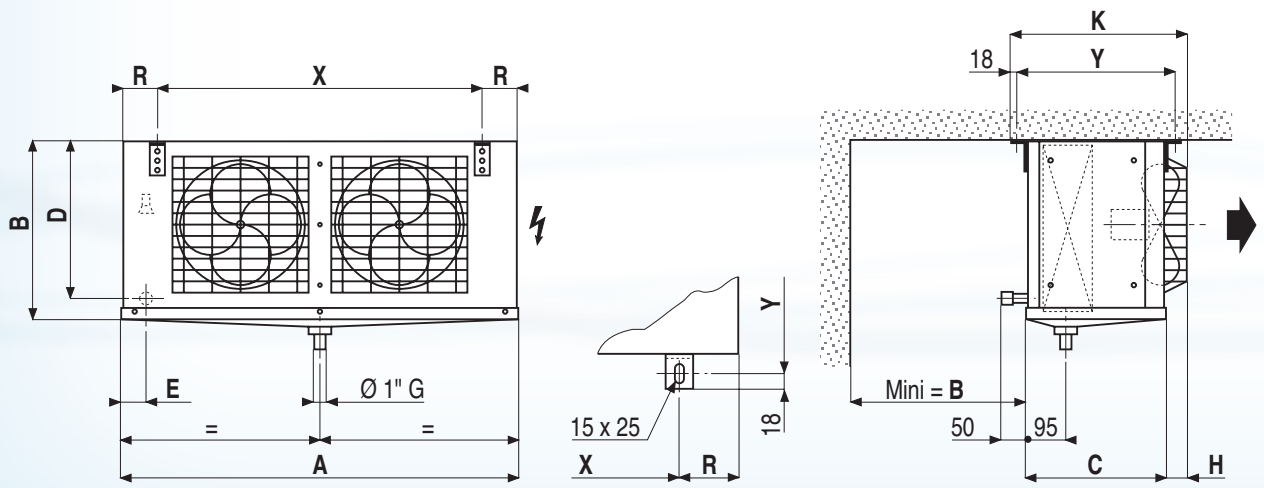


| M60* | MM5* | BAE | BXT | WCO | CO2 | 2TH | HG1 | ECK | ECU | E1K | E1U | ERK | DM | EEC |
|---|---|---|---|---|---|---|---|---|---|---|---|---|---|---|
| O | O | O | O | +👤 | +👤 | O | - | - | - | O | O | - | O | O |

* Only three-phase motors

## LUC ... E

4,23 mm

| | | LUC ... E | 155 | 210 | 295 | 350 | 440 | 550 | 650 | 700 | 710 | 720 | 841 |
|---|---|---|---|---|---|---|---|---|---|---|---|---|---|
| Capacity R404A (1) | DT1 = 7 K - SC3 | kW | 1,42 | 1,84 | 2,69 | 3,03 | 3,96 | 4,86 | 5,68 | 6,92 | 7,51 | 8,47 | 9,24 |
| | DT1 = 6 K - SC4 | kW | 1,10 | 1,44 | 2,04 | 2,37 | 3,12 | 3,82 | 4,48 | 5,73 | 6,22 | 6,94 | 7,26 |
| Surface | | $m^2$ | 5,5 | 8,7 | 10 | 13,4 | 18,2 | 21,4 | 25,8 | 40,2 | 48,7 | 48,7 | 38,6 |
| Circuit volume | | $dm^3$ | 1,1 | 1,8 | 1,9 | 2,6 | 3,5 | 4,0 | 4,8 | 6,9 | 8,4 | 8,4 | 7,2 |
| Air flow | | $m^3/h$ | 1246 | 1239 | 2336 | 2076 | 2562 | 3252 | 3696 | 3264 | 3486 | 4168 | 7895 |
| Fan 50-60 Hz 1500 r.p.m. | Air throw (2) | m | 12 | 12 | 12 | 12 | 12 | 12 | 12 | 12 | 12 | 12 | 30 |
| | Num. x Ø | mm | 1 x 300 | 1 x 300 | 2 x 300 | 2 x 300 | 2 x 300 | 3 x 300 | 3 x 300 | 3 x 300 | 3 x 300 | 4 x 300 | 2 x 450 |
| | 230 V/1/50 Hz | W Total | 145 | 145 | 290 | 290 | 290 | 435 | 435 | 435 | 435 | 580 | - |
| | | A Total | 0,85 | 0,85 | 1,70 | 1,70 | 1,70 | 2,55 | 2,55 | 2,55 | 2,55 | 3,40 | - |
| | 400 V/3/50 Hz | W max | - | - | - | - | - | - | - | - | - | - | 2 x 360 |
| | | A max (3) | - | - | - | - | - | - | - | - | - | - | 2 x 1,0 |
| Electric defrost | Coil | Nb | 1 | 2 | 3 | 5 | 5 | 5 | 5 | 5 | 5 | 5 | 8 |
| | Drain pan | Nb | 1 | 1 | 1 | 1 | 1 | 1 | 1 | 1 | 1 | 1 | 1 |
| | | W Total | 1300 | 2150 | 2000 | 3000 | 3600 | 3600 | 5640 | 6900 | 8400 | 8400 | 8460 |
| | 230 V/1/50 Hz | A Total | 5,7 | 9,4 | 8,7 | - | - | - | - | - | - | - | - |
| | 400 V/3/50 Hz | A Total | - | - | - | 4,4 | 5,2 | 5,2 | 8,2 | 9,9 | 12,1 | 12,1 | 12,2 |
| Net weight | | kg | 16 | 18 | 22 | 27 | 32 | 43 | 44 | 57 | 69 | 71 | 73 |
| Dimensions | A | mm | 575 | 575 | 981 | 981 | 1235 | 1355 | 1665 | 1998 | 2348 | 2348 | 1657 |
| | B | mm | 400 | 464 | 400 | 400 | 400 | 464 | 400 | 400 | 400 | 400 | 590 |
| | C | mm | 365 | 365 | 365 | 365 | 365 | 365 | 365 | 365 | 365 | 365 | 482 |
| | D | mm | 355 | 419 | 355 | 355 | 355 | 419 | 342 | 340 | 340 | 340 | 538 |
| | E | mm | 42 | 39 | 89 | 89 | 89 | 89 | 110 | 110 | 110 | 110 | 110 |
| | H | mm | 53 | 53 | 53 | 53 | 53 | 53 | 53 | 53 | 53 | 53 | 78 |
| | K | mm | 456 | 456 | 456 | 456 | 456 | 456 | 456 | 456 | 456 | 456 | 606 |
| | R | mm | 72 | 72 | 122 | 122 | 122 | 182 | 147 | 147 | 147 | 147 | 147 |
| | X | mm | 416 | 416 | 722 | 722 | 976 | 976 | 1356 | 1686 | 2036 | 2036 | 1356 |
| | Y | mm | 412 | 412 | 412 | 412 | 412 | 412 | 412 | 412 | 412 | 412 | 536 |
| Connections R404A | Inlet | Ø (5) | D 1/2" | D 1/2" | D 1/2" | D 1/2" | D 1/2" | D 1/2" | D 1/2" | D 7/8" | D 7/8" | D 7/8" | D 1 1/8'' |
| | Outlet | Ø ODF (6) | 1/2" | 5/8" | 3/4" | 3/4" | 7/8" | 7/8" | 1 1/8" | 1 1/8" | 1 1/8" | 1 1/8" | 1 3/8" |

*(1) See page 10.*
*(2) Residual air speed: 0.25 m/s, in compliance with standard.*
*(3) Setting of overload protection levels. For air temperatures "ti" other than +20 °C, multiply the currents in relation to 293/(273 + "ti") in order to obtain an approximate current value after the chamber temperature is attained.*
*(5) Distributor: Male to be brazed.*
*(6) ODF: Female to receive a tube of the same diameter.*

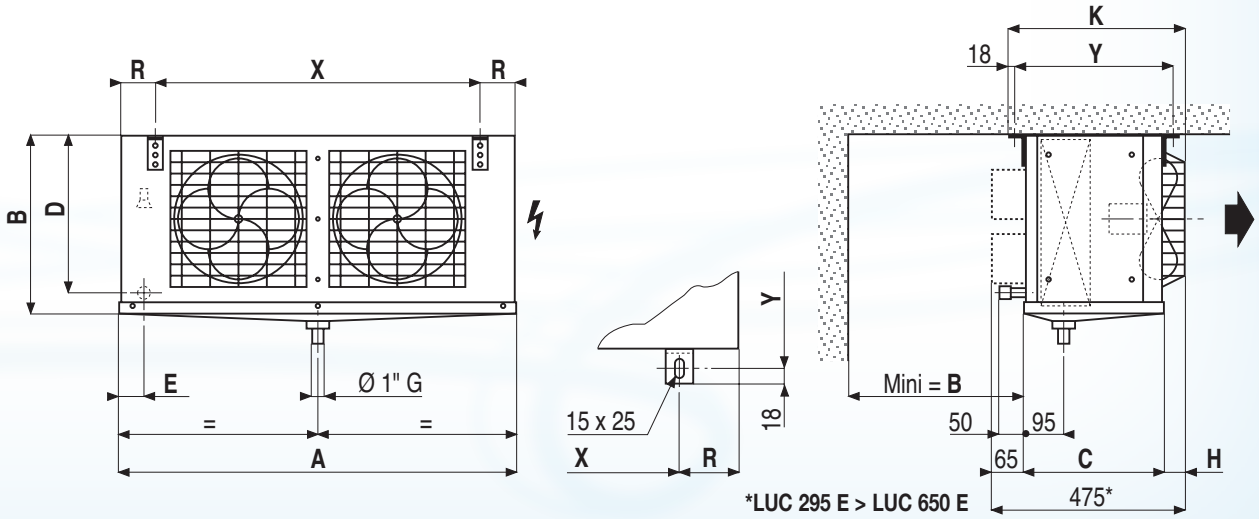


| M60* | MM5* | BAE | BXT | WCO | CO2 | 2TH | HG1 | ECK | ECU | E1K | E1U | ERK | DM | EEC |
|---|---|---|---|---|---|---|---|---|---|---|---|---|---|---|
| O | O | - | - | - | - | O | O | O | O | - | - | O | O | O |

* Only three-phase motors

## LUC ... C

6,35 mm

| | | LUC ... C | 150 | 205 | 290 | 345 | 435 | 545 | 645 | 695 | 705 | 715 | 836 |
|---|---|---|---|---|---|---|---|---|---|---|---|---|---|
| Capacity R404A (1) | DT1 = 7 K - SC3 | kW | 1,30 | 1,67 | 2,48 | 2,78 | 3,58 | 4,39 | 5,17 | 5,68 | 6,21 | 7,08 | 8,38 |
| | DT1 = 6 K - SC4 | kW | 1,03 | 1,31 | 1,96 | 2,20 | 2,83 | 3,48 | 4,11 | 4,76 | 5,18 | 5,89 | 6,61 |
| Capacity CO2* | DT1 = 7 K - SC3 | kW | 1,18 | 1,50 | 2,17 | 2,44 | 3,14 | 3,86 | 4,50 | 4,61 | 5,06 | 5,81 | - |
| | DT1 = 6 K - SC4 | kW | 1,00 | 1,28 | 1,83 | 2,08 | 2,68 | 3,29 | 3,83 | 3,94 | 4,33 | 4,97 | - |
| Surface | | $m^2$ | 5,17 | 7,54 | 9,33 | 11,66 | 15,98 | 18,64 | 22,43 | 27,80 | 33,70 | 33,70 | 33,65 |
| Circuit volume | | $dm^3$ | 1,5 | 2,3 | 2,5 | 3,3 | 4,4 | 5,0 | 6,0 | 6,9 | 8,4 | 8,4 | 9 |
| Air flow | | $m^3/h$ | 1217 | 1239 | 2267 | 2075 | 2561 | 3250 | 3694 | 3435 | 3624 | 4436 | 7893 |
| Fan 50-60 Hz 1500 r.p.m. | Air throw (2) | m | 12 | 12 | 12 | 12 | 12 | 12 | 12 | 12 | 12 | 12 | 30 |
| | Num. x Ø | mm | 1 x 300 | 1 x 300 | 2 x 300 | 2 x 300 | 2 x 300 | 3 x 300 | 3 x 300 | 3 x 300 | 3 x 300 | 4 x 300 | 2 x 450 |
| | 230 V/1/50 Hz | W Total | 145 | 145 | 290 | 290 | 290 | 435 | 435 | 435 | 435 | 580 | - |
| | | A Total | 0,85 | 0,85 | 1,70 | 1,70 | 1,70 | 2,55 | 2,55 | 2,55 | 2,55 | 3,40 | - |
| | 400 V/3/50 Hz | W max | - | - | - | - | - | - | - | - | - | - | 2 x 360 |
| | | A max (3) | - | - | - | - | - | - | - | - | - | - | 2 x 1,0 |
| Electric defrost | Coil | Nb | 2 | 2 | 5 | 5 | 5 | 5 | 5 | 5 | 5 | 5 | 8 |
| | Drain pan | Nb | 1 | 1 | 1 | 1 | 1 | 1 | 1 | 1 | 1 | 1 | 1 |
| | | W Total | 2150 | 2150 | 3000 | 3000 | 3600 | 3600 | 5640 | 6900 | 8400 | 8400 | 8460 |
| | 230 V/1/50 Hz | A Total | 5,7 | 9,4 | - | - | - | - | - | - | - | - | - |
| | 400 V/3/50 Hz | A Total | - | - | 4,4 | 4,4 | 5,2 | 5,2 | 8,2 | 9,9 | 12,1 | 12,1 | 12,2 |
| Net weight | | kg | 16 | 18 | 22 | 27 | 32 | 43 | 44 | 57 | 69 | 71 | 73 |
| Dimensions | A | mm | 575 | 575 | 981 | 981 | 1235 | 1355 | 1665 | 1998 | 2348 | 2348 | 1657 |
| | B | mm | 400 | 464 | 400 | 400 | 400 | 464 | 400 | 400 | 400 | 400 | 590 |
| | C | mm | 365 | 365 | 365 | 365 | 365 | 365 | 365 | 365 | 365 | 365 | 482 |
| | D | mm | 355 | 419 | 355 | 355 | 355 | 419 | 342 | 340 | 340 | 340 | 538 |
| | E | mm | 42 | 39 | 89 | 89 | 89 | 89 | 110 | 110 | 110 | 110 | 110 |
| | H | mm | 53 | 53 | 53 | 53 | 53 | 53 | 53 | 53 | 53 | 53 | 78 |
| | K | mm | 456 | 456 | 456 | 456 | 456 | 456 | 456 | 456 | 456 | 456 | 606 |
| | R | mm | 72 | 72 | 122 | 122 | 122 | 182 | 147 | 147 | 147 | 147 | 147 |
| | X | mm | 416 | 416 | 722 | 722 | 976 | 976 | 1356 | 1686 | 2036 | 2036 | 1356 |
| | Y | mm | 412 | 412 | 412 | 412 | 412 | 412 | 412 | 412 | 412 | 412 | 536 |
| Connections R404A | Inlet | Ø (5) | D 1/2" | D 1/2" | D 1/2" | D 1/2" | D 1/2" | D 1/2" | D 1/2" | D 7/8" | D 7/8" | D 7/8" | D 1 1/8'' |
| | Outlet | Ø ODF (6) | 5/8" | 5/8" | 3/4" | 3/4" | 7/8" | 7/8" | 1 1/8" | 1 1/8" | 1 1/8" | 1 1/8" | 1 3/8" |
| Connections CO2 | Inlet | Ø (5) | 3/8" | 3/8" | 5/8" | 5/8" | 5/8" | 5/8" | 5/8" | 5/8" | 5/8" | 5/8" | 5/8" |
| | Outlet | Ø ODF (6) | 3/8" | 3/8" | 1/2" | 1/2" | 5/8" | 5/8" | 3/4" | 3/4" | 3/4" | 3/4" | 7/8" |

** Tube diameter to define the order.*

*(1) See page 10.*
*(2) Residual air speed: 0.25 m/s, in compliance with standard.*
*(3) Setting of overload protection levels. For air temperatures "ti" other than +20 °C, multiply the currents in relation to 293/(273 + "ti") in order to obtain an approximate current value after the chamber temperature is attained.*
*(5) Distributor: Male to be brazed.*
*(6) ODF: Female to receive a tube of the same diameter.*

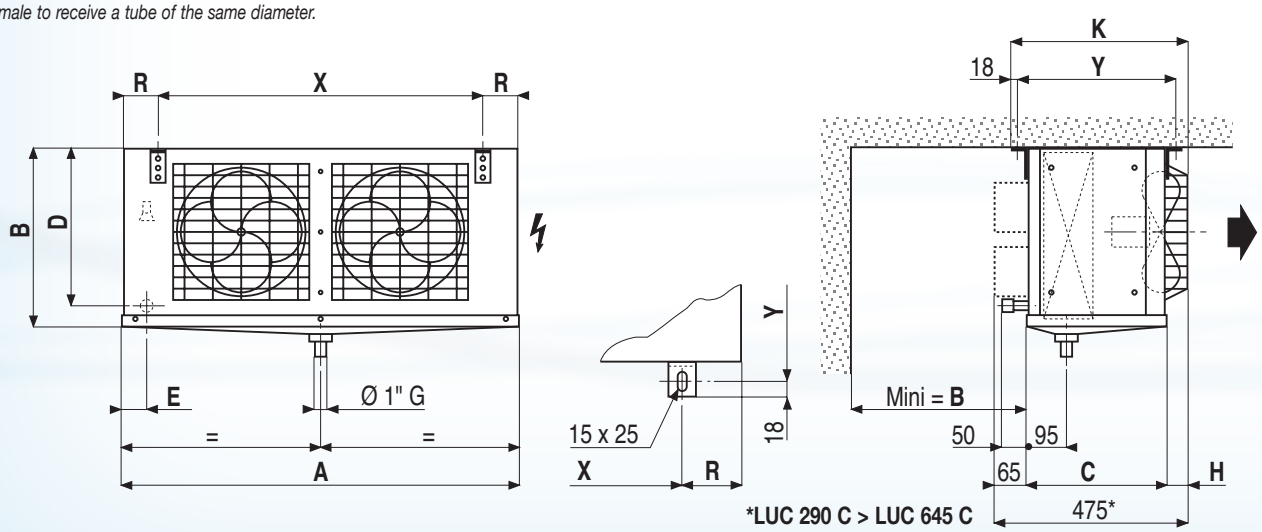


| M60* | MM5* | BAE | BXT | WCO | CO2 | 2TH | HG1 | ECK | ECU | E1K | E1U | ERK | DM | EEC |
|---|---|---|---|---|---|---|---|---|---|---|---|---|---|---|
| O | O | - | - | - | +👤 | O | O | O | O | - | - | O | O | O |

* Only three-phase motors

HEATCRAFT™
Worldwide Refrigeration

EUROVENT CERTIFIED PERFORMANCE
www.eurovent-certification.com

E Solutions
Efficiency • Environment

# Cubic unit cooler

## SD commercial range

- The SD range meets the requirements of medium size cold rooms (up to 70 $m^3$).
- ABS casing with rounded corner resistant to aggressive environments and anti-corrosion treatment of the coil fins.
- An intermediate drain pan avoids condensation on the casing.
- Electric fans with a single diameter of 300 mm, supplied factory wired as standard.

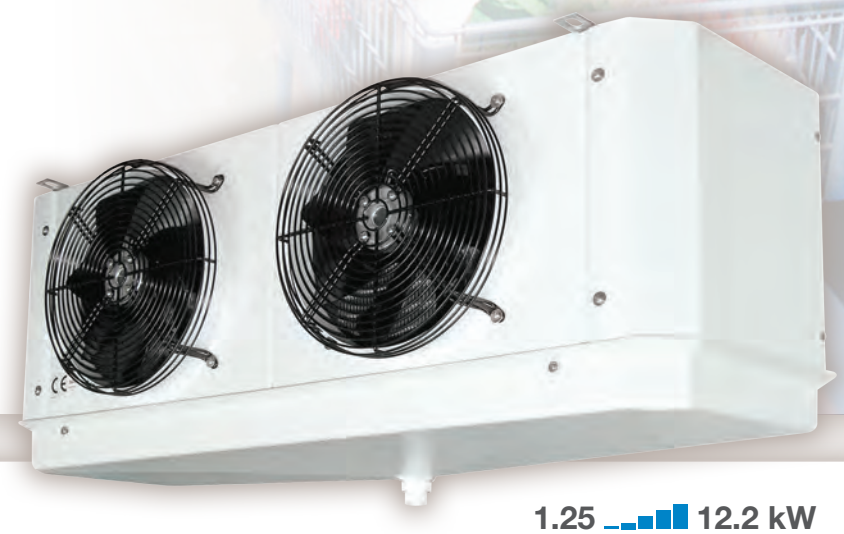

*Natural fluids: Glycol water*

ABS 7

1.25 – 12.2 kW

FRIGA-BOHN

HYFRA® PEDIA

HK® REFRIGERATION

Heatcraft reserves itself the right to make changes at any time without preliminary notice - Photos non-contractual

## Market segments

*FFS* *Bars - Restaurants – Corner shops – Mini-markets*
*FSM* *Hard Discount - Supermarkets - Hypermarkets*

## Description

### Casing

• The ABS recyclable casing guarantees a high quality with regard to:

**Sturdiness**

High thermal (at low and high temperatures) and mechanical shock resistance.

**Aesthetics**

The design, finish and granulated white casing enable perfect integration of the unit into the surrounding environment.

**Hygiene**

No water retention zones (photo n°3) favouring the development of harmful germs thanks to the casing with rounded corners and no corrosive elements (for example: stainless steel screws).

**Safety**

No sharp or cutting edges.

### Ventilation

• The SD range is equipped with factory wired, permanently lubricated, high-output axial fans: Ø 300 mm external rotor, 230 V single-phase, 50-60 Hz, IP44 with thermal overload protection incorporated.
• Fan guards are compliant with safety standards (photo n°2).

### Coil

• The finned coils of the SD range are designed with corrugated aluminium fins (fin spacing 4.23 or 6.35 mm) and internally grooved copper tubes.
• The coils are supplied via a Venturi distributor.

### Defrost

• The shielded electric heaters are inserted in the finned sleeve.
• One of the heaters is fastened under the intermediate drain pan (photo n°3).
This facility enables homogenous heat distribution for fast and efficient defrosting.
• The heaters are factory wired to a terminal block in a sealed junction box.

## Certifications

## Designation

# SD 062(1) R(2)

(1) Model
(2) Fin spacing: **R** = 3,63 mm - **L/C** = 6,35 mm

## Advantages

### Installation

Large space available for easy installation of the expansion valve.

The expansion valve may be supplied factory pre-fitted (option DM), as well as fully equipped (option EEC) to help reduce installation time.

### Servicing / Maintenance

Easily removable side panels offer comfortable access to all unit cooler components (photo n°4).

1.

3.

2.

4.

## Options

| Kit | Factory | |
|---|---|---|
| | | **Coil** |
| | BAE | Paint coil protection. |
| | BXT | Blygold Polual XT coil protection. |
| | WCO | Glycol water, coolant (please contact us for details). |
| | | **Defrost** |
| ELK | ELU | Electric defrost (SD-R and SD-L): 3 coil heaters + 1 drain pan heater. |
| ECK | ECU | Additional coil electric defrost. |
| RVK | RVU | Sleeve defrost heaters. |
| | | **Fully equipped unit coolers** |
| | DM | Expansion valve fitted. |
| | EEC | Fully equipped unit cooler:<br>- Expansion valve fitted.<br>- Solenoid valve fitted.<br>- Ball valve fitted.<br>- Copper siphon equipped with a ball valve delivered not fitted. |

## SD ... R

**4,23 mm**

| | | SD ... R | 024 | 030 | 038 | 052 | 062 | 082 | 104 | 118 | 148 | 158 |
|---|---|---|---|---|---|---|---|---|---|---|---|---|
| Capacity R404A (1) | DT1 = 8K - SC 2 | kW | **2,10** | **2,41** | **2,86** | **3,69** | **5,04** | **6,31** | **7,58** | **9,05** | **10,79** | **12,18** |
| Surface | | $m^2$ | 6,3 | 8,4 | 12,7 | 19,9 | 17,5 | 26,5 | 39,8 | 39,8 | 53,3 | 53,3 |
| Circuit volume | | $dm^3$ | 1,23 | 1,64 | 2,46 | 3,64 | 3,22 | 4,78 | 7,18 | 7,18 | 9,52 | 9,52 |
| Air flow | | $m^3/h$ | 1530 | 1470 | 1330 | 1570 | 2990 | 3260 | 3200 | 4090 | 4560 | 5470 |
| Fan 230 V/1/50-60 Hz 1,500 rpm. | Air throw (2) | m | 13 | 13 | 12 | 14 | 13 | 15 | 14 | 13 | 14 | 13 |
| | Ø 300 mm | Nb | 1 | 1 | 1 | 1 | 2 | 2 | 2 | 3 | 3 | 4 |
| | 230V/1/50Hz | W max | 1 x 102 | 1 x 102 | 1 x 102 | 1 x 102 | 2 x 102 | 2 x 102 | 2 x 102 | 3 x 102 | 3 x 102 | 4 x 102 |
| | | A max (3) | 1 x 0,44 | 1 x 0,44 | 1 x 0,44 | 1 x 0,44 | 2 x 0,44 | 2 x 0,44 | 2 x 0,44 | 3 x 0,44 | 3 x 0,44 | 4 x 0,44 |
| Electric defrost ELK (4) | 230V/1/50Hz | W total | 1000 | 1000 | 1000 | 1600 | 2160 | 3280 | 3280 | 3280 | 4400 | 4400 |
| | | A total | 4,3 | 4,3 | 4,3 | 7,0 | 9,4 | 14,3 | 14,3 | 14,3 | 19,1 | 19,1 |
| Electric defrost ELK + ECK (5) | | W total | 1500 | 1500 | 1500 | 2400 | 3240 | 4920 | 4920 | 4920 | 6600 | 6600 |
| | 230V/1/50Hz | A total | 6,5 | 6,5 | 6,5 | 10,4 | - | - | - | - | - | - |
| | 400V/3/50Hz | A total | - | - | - | - | 4,7 | 7,1 | 7,1 | 7,1 | 9,5 | 9,5 |
| Net weight | | kg | 13 | 14 | 16 | 21 | 25 | 34 | 38 | 42 | 53 | 57 |
| Dimensions | A | mm | 710 | 710 | 710 | 940 | 1170 | 1630 | 1630 | 1630 | 2090 | 2090 |
| | B | mm | 460 | 460 | 460 | 690 | 920 | 1380 | 1380 | 1380 | 1840 | 1840 |
| | C | mm | - | - | - | - | - | - | - | - | 920 | 920 |
| | H | mm | 458 | 458 | 458 | 460 | 463 | 468 | 468 | 468 | 473 | 473 |
| Connections | Inlet | Ø (6) | D1/2" | D1/2" | D1/2" | D1/2" | D1/2" | D5/8" | D5/8" | D5/8" | D5/8" | D5/8" |
| R404A | Outlet | Ø OD (7) | 1/2" | 1/2" | 1/2" | 5/8" | 5/8" | 7/8" | 7/8" | 7/8" | 1 1/8" | 1 1/8" |

*(1) See page 10.*
*(2) Residual air speed: 0.25 m/s, in compliance with standard.*
*(3) Setting of overload protection levels.*
*For air temperatures "ti" other than +20 °C, multiply the currents in relation to 293/(273 + "ti") in order to obtain an approximate current value after the chamber temperature is attained.*
*(4) Electric defrost kit.*
*(5) Additional electric defrosting kit.*
*(6) Distributor: Male to be brazed.*
*(7) OD: Male connector*

| BAE | BXT | WCO | ELK | ELU | ECK | ECU | RVK | RVU | DM | EEC |
|---|---|---|---|---|---|---|---|---|---|---|
| O | O | - | O | O | O | O | O | O | O | O |

## SD ... L

**6,35 mm**

| | | SD ... L | 021 | 027 | 035 | 048 | 055 | 073 | 095 | 110 | 136 | 148 |
|---|---|---|---|---|---|---|---|---|---|---|---|---|
| Capacity R404A (1) | DT1 = 8K - SC 2 | kW | **1,62** | **1,97** | **2,46** | **3,12** | **4,06** | **5,10** | **6,36** | **7,76** | **9,10** | **10,43** |
| Capacity W* | DT1 = 8K | kW | **-** | **-** | **2,78** | **-** | **-** | **5,53** | **-** | **7,99** | **-** | **10,16** |
| Surface | | $m^2$ | 4,4 | 5,8 | 8,7 | 13,7 | 12,1 | 18,1 | 27,5 | 27,5 | 36,8 | 36,8 |
| Circuit volume | | $dm^3$ | 1,23 | 1,64 | 2,46 | 3,64 | 3,22 | 4,78 | 7,18 | 7,18 | 9,52 | 9,52 |
| Air flow | | $m^3/h$ | 1580 | 1550 | 1430 | 1620 | 3140 | 2910 | 3230 | 4390 | 4740 | 5870 |
| Fan 230 V/1/50-60 Hz 1,500 rpm. | Air throw (2) | m | 14 | 13 | 12 | 14 | 14 | 13 | 14 | 14 | 15 | 14 |
| | Ø 300 mm | Nb | 1 | 1 | 1 | 1 | 2 | 2 | 2 | 3 | 3 | 4 |
| | 230V/1/50Hz | W max | 1 x 102 | 1 x 102 | 1 x 102 | 1 x 102 | 2 x 102 | 2 x 102 | 2 x 102 | 3 x 102 | 3 x 102 | 4 x 102 |
| | | A max (3) | 1 x 0,44 | 1 x 0,44 | 1 x 0,44 | 1 x 0,44 | 2 x 0,44 | 2 x 0,44 | 2 x 0,44 | 3 x 0,44 | 3 x 0,44 | 4 x 0,44 |
| Electric defrost ELK (4) | 230V/1/50Hz | W total | 1000 | 1000 | 1000 | 1600 | 2160 | 2160 | 3280 | 3280 | 4400 | 4400 |
| | | A total | 4,3 | 4,3 | 4,3 | 7,0 | 9,4 | 9,4 | 14,3 | 14,3 | 19,1 | 19,1 |
| Electric defrost ELK + ECK (5) | | W total | 1500 | 1500 | 1500 | 2400 | 3240 | 3240 | 4920 | 4920 | 6600 | 6600 |
| | 230V/1/50Hz | A total | 6,5 | 6,5 | 6,5 | 10,4 | - | - | - | - | - | - |
| | 400V/3/50Hz | A total | - | - | - | - | 4,7 | 4,7 | 7,1 | 7,1 | 9,5 | 9,5 |
| Net weight | | kg | 15 | 16 | 18 | 23 | 28 | 32 | 42 | 46 | 58 | 62 |
| Dimensions | A | mm | 710 | 710 | 710 | 940 | 1170 | 1170 | 1630 | 1630 | 2090 | 2090 |
| | B | mm | 460 | 460 | 460 | 690 | 920 | 920 | 1380 | 1380 | 1840 | 1840 |
| | C | mm | - | - | - | - | - | - | - | - | 920 | 920 |
| | H | mm | 458 | 458 | 458 | 460 | 463 | 463 | 468 | 468 | 473 | 473 |
| Connections | Inlet | Ø (6) | D1/2" | D1/2" | D1/2" | D1/2" | D1/2" | D5/8" | D5/8" | D5/8" | D5/8" | D5/8" |
| R404A | Outlet | Ø OD (7) | 1/2" | 1/2" | 1/2" | 5/8" | 5/8" | 7/8" | 7/8" | 7/8" | 1 1/8" | 1 1/8" |

*(1) See page 10.*
*(2) Residual air speed: 0.25 m/s, in compliance with standard.*
*(3) Setting of overload protection levels.*
*For air temperatures "ti" other than +20 °C, multiply the currents in relation to 293/(273 + "ti") in order to obtain an approximate current value after the chamber temperature is attained.*
*(4) Electric defrost kit.*
*(5) Additional electric defrosting kit.*
*(6) Distributor: Male to be brazed.*
*(7) OD: Male connector*

** Glycol water:*
*Fluid: Percentage of glycol = 30 %*
*Fluid inlet temp. = -8°C - Fluid outlet temp. = -4°C*
*Air: Inlet dry temp. = +2°C - relative humidity = 85 %*
*Other conditions: please contact us.*

| BAE | BXT | WCO | ELK | ELU | ECK | ECU | RVK | RVU | DM | EEC |
|---|---|---|---|---|---|---|---|---|---|---|
| O | O | +👤 | O | O | O | O | O | O | O | O |

## SD ... C

**6,35 mm**

| | | SD ... C | 021 | 027 | 035 | 048 | 055 | 073 | 095 | 110 | 136 | 148 |
|---|---|---|---|---|---|---|---|---|---|---|---|---|
| Capacity R404A (1) | DT1 = 7K - SC 3 | kW | **1,25** | **1,49** | **1,55** | **2,44** | **3,13** | **4,01** | **5,05** | **6,08** | **7,21** | **8,18** |
| Surface | | $m^2$ | 4,4 | 5,8 | 8,7 | 13,7 | 12,1 | 18,1 | 27,5 | 27,5 | 36,8 | 36,8 |
| Circuit volume | | $dm^3$ | 1,23 | 1,64 | 2,46 | 3,64 | 3,22 | 4,78 | 7,18 | 7,18 | 9,52 | 9,52 |
| Air flow | | $m^3/h$ | 1580 | 1550 | 1430 | 1620 | 3140 | 2910 | 3230 | 4390 | 4740 | 5870 |
| Fan 230 V/1/50-60 Hz 1,500 rpm. | Air throw (2) | m | 14 | 13 | 12 | 14 | 14 | 13 | 14 | 14 | 15 | 14 |
| | Ø 300 mm | Nb | 1 | 1 | 1 | 1 | 2 | 2 | 2 | 3 | 3 | 4 |
| | 230V/1/50Hz | W max | 1 x 102 | 1 x 102 | 1 x 102 | 1 x 102 | 2 x 102 | 2 x 102 | 2 x 102 | 3 x 102 | 3 x 102 | 4 x 102 |
| | | A max (3) | 1 x 0,44 | 1 x 0,44 | 1 x 0,44 | 1 x 0,44 | 2 x 0,44 | 2 x 0,44 | 2 x 0,44 | 3 x 0,44 | 3 x 0,44 | 4 x 0,44 |
| Electric defrost | 230V/1/50Hz | W total | 1000 | 1000 | 1000 | 1600 | 2160 | 2160 | 3280 | 3280 | 4400 | 4400 |
| | | A total | 4,3 | 4,3 | 4,3 | 7,0 | 9,4 | 9,4 | 14,3 | 14,3 | 19,1 | 19,1 |
| Electric defrost + ECK (3) | | W total | 1500 | 1500 | 1500 | 2400 | 3240 | 3240 | 4920 | 4920 | 6600 | 6600 |
| | 230V/1/50Hz | A total | 6,5 | 6,5 | 6,5 | 10,4 | - | - | - | - | - | - |
| | 400V/3/50Hz | A total | - | - | - | - | 4,7 | 4,7 | 7,1 | 7,1 | 9,5 | 9,5 |
| Sleeve defrost | 230V/1/50Hz | W total | 1 x 50 | 1 x 50 | 1 x 50 | 1 x 50 | 2 x 50 | 2 x 50 | 2 x 50 | 3 x 50 | 3 x 50 | 4 x 50 |
| | | A total | 1 x 0,22 | 1 x 0,22 | 1 x 0,22 | 1 x 0,22 | 2 x 0,22 | 2 x 0,22 | 2 x 0,22 | 3 x 0,22 | 3 x 0,22 | 4 x 0,22 |
| Net weight | | kg | 15 | 16 | 18 | 23 | 28 | 32 | 42 | 46 | 58 | 62 |
| Dimensions | A | mm | 710 | 710 | 710 | 940 | 1170 | 1170 | 1630 | 1630 | 2090 | 2090 |
| | B | mm | 460 | 460 | 460 | 690 | 920 | 920 | 1380 | 1380 | 1840 | 1840 |
| | C | mm | - | - | - | - | - | - | - | - | 920 | 920 |
| | H | mm | 458 | 458 | 458 | 460 | 463 | 463 | 468 | 468 | 473 | 473 |
| Connections R404A | Inlet | Ø (6) | D1/2" | D1/2" | D1/2" | D1/2" | D1/2" | D5/8" | D5/8" | D5/8" | D5/8" | D5/8" |
| | Outlet | Ø OD (7) | 1/2" | 1/2" | 1/2" | 5/8" | 5/8" | 7/8" | 7/8" | 7/8" | 1 1/8" | 1 1/8" |

*(1) See page 10.*
*(2) Residual air speed: 0.25 m/s, in compliance with standard.*
*(3) Setting of overload protection levels.*
*For air temperatures "ti" other than +20 °C, multiply the currents in relation to 293/(273 + "ti") in order to obtain an approximate current value after the chamber temperature is attained.*
*(4) Electric defrost kit.*
*(5) Additional electric defrosting kit.*
*(6) Distributor: Male to be brazed.*
*(7) OD: Male connector*

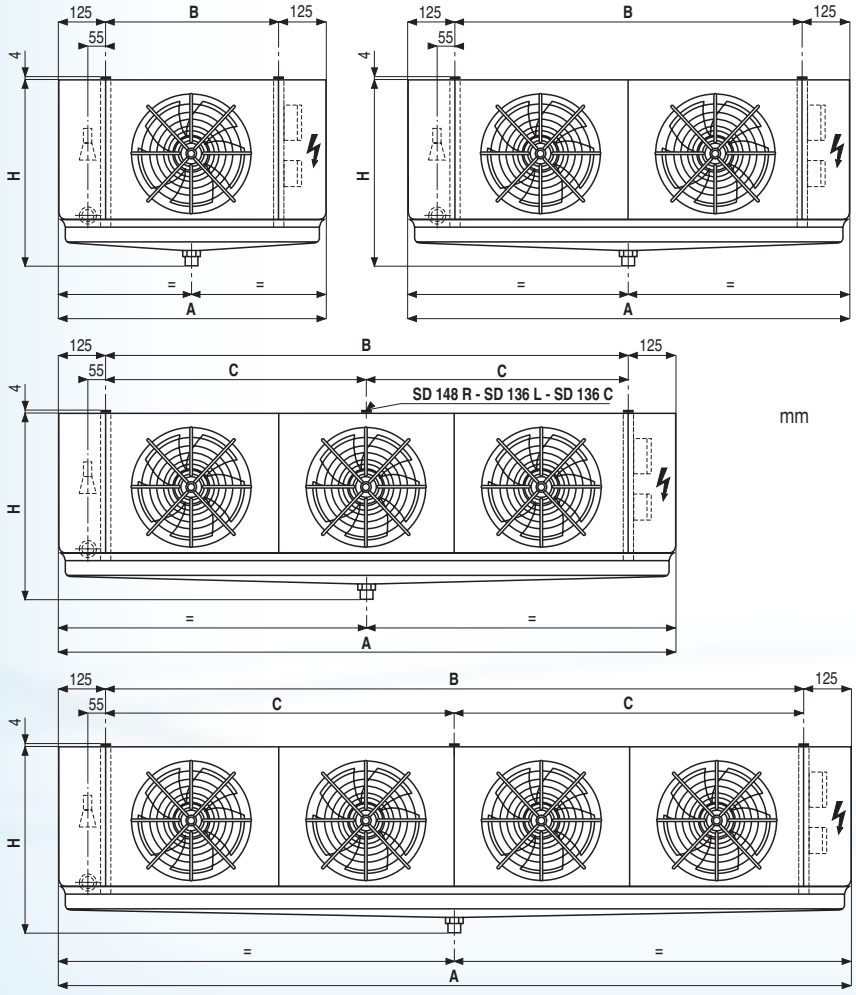


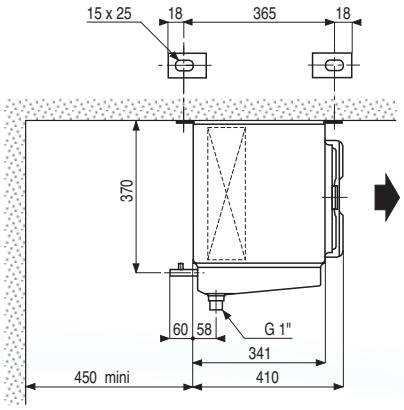


| BAE | BXT | WCO | ELK | ELU | ECK | ECU | RVK | RVU | DM | EEC |
|---|---|---|---|---|---|---|---|---|---|---|
| - | - | - | - | - | O | O | O | O | O | O |

HEATCRAFT™
Worldwide Refrigeration

EUROVENT CERTIFIED PERFORMANCE
www.eurovent-certification.com

E Solutions
Efficiency • Environment

# Cubic unit cooler

## SKB semi-industrial range

- The SKB range is designed for commercial refrigeration applications or low temperature storage.
- Numerous electric or hot gas defrost possibilities.
- Wide choice of options for specific semi-industrial applications (streamer, …).
- The 2-speed fan (optional) enables adaptation of noise level and ventilation.

*Natural fluids:*
*Glycol water*
*$CO_2$ (R744)**

** Low temperature applications*

4 ▁▂▃▅▆ 30.5 kW

FRIGA-BOHN

HYFRA® PEDIA

HK® REFRIGERATION

Heatcraft reserves itself the right to make changes at any time without preliminary notice - Photos non-contractual

# SKB - Cubic semi-industrial unit cooler

## Market segments

*FSM Hard Discount - Supermarkets - Hypermarkets*
*FCS Refrigerated storage and transit stocking - Dispatch centres – Food processing*

## Description

### Casing

- The aesthetic, white pre-painted galvanized sheet steel casing enables easy cleaning of the unit.
- The SKB-E and SKB-C models are equipped with an intermediate drain pan to help limit condensation.

### Ventilation

- The SKB unit cooler range is equipped with axial fans Ø 450 mm, 4 P =1,500 rpm, 230-400 V, 3-phase, 50 Hz, mono-block, IP 54, class F, requiring no routine maintenance and an independently connected thermal overload protection incorporated.
- The high-efficiency, profiled fan blades turn at a very low noise level.
- Fan guards are compliant with safety standards.
- The 2V5 option offers a low speed setting which is ideal for applications in which noise level is a key consideration. Refer to the correction chart for selection of a low-speed unit.

### Coil

- The highly efficient and compact SKB range finned coils are designed with corrugated surface aluminium fins (fin spacing 4.23 or 6.35 mm) and internally grooved copper tubes.
- The coils are supplied via a factory pre-fitted diaphragm distributor.

### Defrost

- The shielded (electric) heaters are inserted in the sleeved tubes in the finned coil.
- One of the heaters is fastened under the intermediate drain pan. This facility enables homogenous heat distribution for fast and efficient defrosting.
- The heaters are factory wired to a terminal block and connected for 400V/3.
- 230 V 3-phase or 230 V 1-phase connection possible.
- The condensate is recovered in an intermediate drain pan and then drained via a large drain fitting (Ø 1" G).

## Certifications

EUROVENT CERTIFIED PERFORMANCE www.eurovent-certification.com

## Designation

# SKB 19(1) R(2)

(1) Model
(2) Fin spacing: **R / E** = 4.23 mm - **L / C** = 6.35 mm

## Advantages

### Installation

Large space available for easy installation of the expansion valve.

Possibility of providing factory pre-wired motors (CMU option) to help reduce installation time.

### Servicing / Maintenance

Easily removable side panels and exterior hinged drain pan swivelling down offering comfortable access to all unit cooler components.

The hinged drain pan enables simple removal rendering maintenance work easier (see photo).

## Application of options

**Homogenous distribution of air flow**

**RFA option:**
Provides increased air throw, optimized air flow and efficient distribution of air in the cold room.

**Application requiring installation of a textile duct**

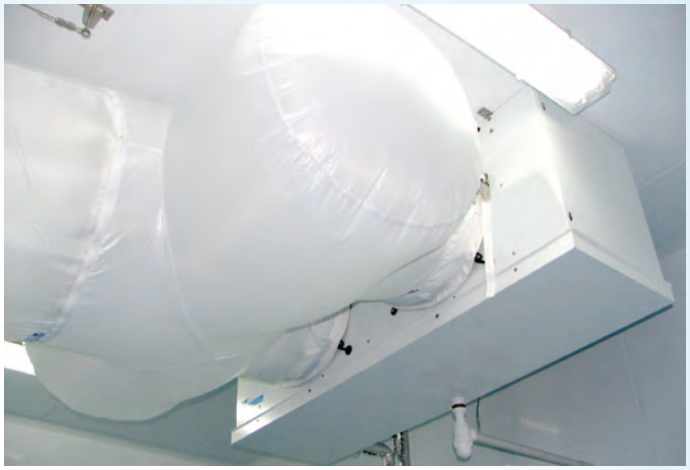

**VGT and MP5 option:**
Shell used to fasten the textile duct (not supplied), the special-purpose fan ensures the ventilation air pressure of 50 Pa available.

**Adapted ventilation and noise level.**

**2V5 option:**
The fan motor may be wired for high or low speed:
**High speed** during the charging phase requiring high capacity.
**Low speed** during a long storage period or in case of presence of employees for reduced noise level.

**Defrost for low-temperature applications**

**VPM option:**
Avoid circulation of hot air during defrost cycles.
Reduction of defrost cycle time for energy saving.

| Kit | Factory | Options |
|---|---|---|
| | | **Ventilation** |
| | 2V5 | Two-speed fan 400V/3/50Hz. |
| | M60 | Fan 230-400V/3/60Hz. |
| | MM5 | Fan 230V/1/50Hz. |
| | MP5 | High air pressure fan 400V/3/50Hz. |
| | CMU | Motor factory wired. |
| RFA | | Air stream deflector. |
| VGT | | Textile duct shell with guard* for forced ventilation. |
| VPM | | Flexible defrost sleeve, shell + streamer |
| | | **Coil** |
| | BAE | Paint coil protection. |
| | BXT | Blygold Polual XT coil protection. |
| | WCO | Glycol water, coolant (please contact us for details). |
| | CO2 | R744 optimization (please contact us for details). |
| | | **Defrost** |
| | HG1 | Hot gas (coil: hot gas, drain pan: electric heating elements). |
| | HGT | Hot gas (coil and drain pan). |
| E1K | E1U | Light electric defrost: SKB-R and SKB-L: light electric defrost (3 coil heaters). SKB-E and SKB-C: light electric defrost (3 additional heaters in the coil). |
| ELK | ELU | Complete electric defrost (SKB-R and SKB-L): 5 coil heaters + 1 drain pan heater). |
| RVK | RVU | Shell defrost heaters. |
| 2TH | | Defrost and safety thermostats (5709L + 5708L). |
| THD | | Defrost thermostat (5709L). |
| THS | | Safety thermostat (5708L). |
| | | **Fully equipped unit coolers** |
| | DM | Expansion valve fitted. |
| | EEC | Fully equipped unit cooler: - Expansion valve fitted. - Solenoid valve fitted. - Ball valve fitted. - Copper siphon equipped with a ball valve delivered not fitted. |

## SKB ... R

**4,23 mm**

| D connection | | SKB ... R | 06 | 10 | 12 | 16 | 19 | 24 |
|---|---|---|---|---|---|---|---|---|
| Capacity R404A (1) | DT1 = 8K - SC 2 | kW | **7,62** | **13,17** | **15,77** | **19,87** | **23,51** | **30,48** |
| Air flow | | $m^3/h$ | 3900 | 8600 | 7800 | 12900 | 11700 | 15000 |
| Air throw (2) | | m | 19 | 21 | 21 | 23 | 23 | 25 |
| Air throw with **RFA** option | | m | 35 | 37 | 37 | 39 | 39 | 41 |
| Sound power level - **Lp 4m** (3) | | dB(A) | 50 | 53 | 53 | 55 | 55 | 56 |

| Y connection (2V5 option) | | SKB ... R | 06 | 10 | 12 | 16 | 19 | 24 |
|---|---|---|---|---|---|---|---|---|
| Capacity R404A (1) | DT1 = 8K - SC 2 | kW | **6,40** | **11,19** | **13,25** | **16,89** | **19,75** | **25,30** |
| Air flow | | $m^3/h$ | 2964 | 6622 | 5928 | 9933 | 8892 | 11400 |
| Air throw (2) | | m | 15 | 17 | 17 | 18 | 18 | 20 |
| Air throw with **RFA** option | | m | 31 | 33 | 33 | 34 | 34 | 36 |
| Sound power level - **Lp 4m** (3) | | dB(A) | 47 | 50 | 50 | 52 | 52 | 53 |

| | | SKB ... R | 06 | 10 | 12 | 16 | 19 | 24 |
|---|---|---|---|---|---|---|---|---|
| Surface | | $m^2$ | 28,5 | 38 | 57 | 57 | 86 | 105 |
| Circuit volume | | $dm^3$ | 4,85 | 6,57 | 9,69 | 9,58 | 14,36 | 17,48 |
| Fan 230-400 V/3/50 Hz 1,500 rpm. | Ø 450 mm | Nb | 1 | 2 | 2 | 3 | 3 | 4 |
| | 400 V/3/50 Hz | W max | 1 x 499 | 2 x 499 | 2 x 499 | 3 x 499 | 3 x 499 | 4 x 499 |
| | | A max (4) | 1 x 1 | 2 x 1 | 2 x 1 | 3 x 1 | 3 x 1 | 4 x 1 |
| Electric defrost **E1K** (5) | 400 V/3/50 Hz | W total | 1050 | 1500 | 2100 | 2100 | 3000 | 3600 |
| | | A total | 1,56 | 2,28 | 3,19 | 3,19 | 4,56 | 5,47 |
| Electric defrost **ELK** (5) | 400 V/3/50 Hz | W total | 2100 | 3000 | 4200 | 4200 | 6000 | 7200 |
| | | A total | 3,19 | 4,56 | 6,38 | 6,38 | 9,12 | 10,94 |
| Connections R404A | Inlet | Ø (6) | D 5/8" | D 1 1/8" | D 1 1/8" | D 1 1/8" | D 1 1/8" | D 1 5/8" |
| | Outlet | Ø ODF (7) | 7/8" | 1 3/8" | 1 3/8" | 1 5/8" | 1 5/8" | 1 5/8" |
| Net weight | | kg | 52 | 90 | 100 | 115 | 132 | 149 |

*(1) See page 10.*
*(2) Residual air speed: 0.25 m/s, in compliance with standard.*
*(3) Average sound pressure level in dB(A) measured at 4 m, at fan height, in direct line of sight on a reflective surface, given for information only..*
*(4) Setting of overload protection levels. For air temperatures "ti" other than +20°C, multiply the currents in relation to 293/(273 + "ti") in order to obtain an approximate current value after the chamber temperature is attained.*
*(5) Electric defrost option.*
*(6) Distributor: Male to be brazed.*
*(7) ODF: Female to receive a tube of the same diameter.*

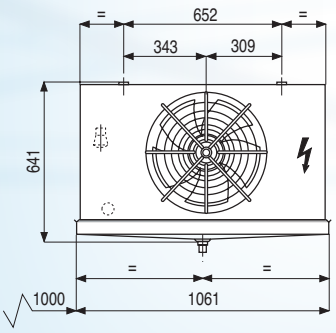


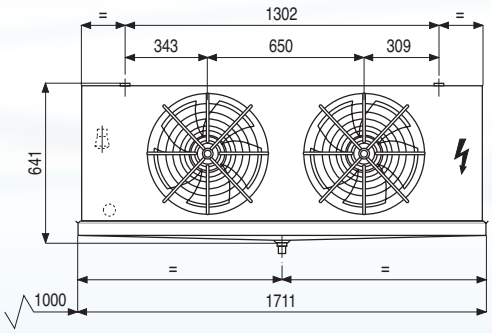


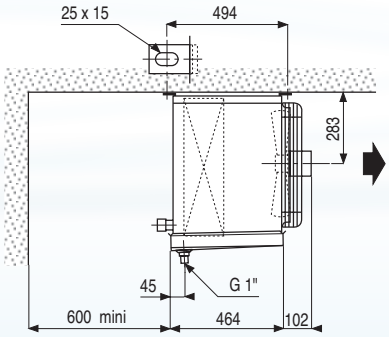


| 2V5 | MM5 | MP5 | CMU | RFA | VGT | VPM | BAE | BXT | WCO | CO2 | HG1 | HGT | E1K | E1U | ELK | ELU | RVK | RVU | 2TH | THD | THS | DM | EEC |
|---|---|---|---|---|---|---|---|---|---|---|---|---|---|---|---|---|---|---|---|---|---|---|---|
| O | O | O | O | +👤 | O | O | O | O | +👤 | - | O | - | O | O | O | O | O | O | O | O | O | O | O |

## SKB ... L

**6,35 mm**

| D connection | | SKB ... L | 06 | 09 | 11 | 14 | 18 | 22 |
|---|---|---|---|---|---|---|---|---|
| Capacity R404A (1) | DT1 = 8K - SC 2 | kW | **6,56** | **10,42** | **13,43** | **15,54** | **20,14** | **25,92** |
| Capacity W* | DT1 = 8K | kW | **5,87** | **-** | **13,04** | **-** | **17,07** | **26,21** |
| Air flow | | $m^3/h$ | 4150 | 9000 | 8300 | 13500 | 12450 | 16000 |
| Air throw (2) | | m | 19 | 21 | 21 | 23 | 23 | 25 |
| Air throw with **RFA** option | | m | 35 | 37 | 37 | 39 | 39 | 41 |
| Sound power level - **Lp 4m** (3) | | dB(A) | 50 | 53 | 53 | 55 | 55 | 56 |

| Y connection (2V5 option) | | SKB ... L | 06 | 09 | 11 | 14 | 18 | 22 |
|---|---|---|---|---|---|---|---|---|
| Capacity R404A (1) | DT1 = 8K - SC 2 | kW | **5,44** | **8,86** | **11,15** | **13,21** | **16,72** | **21,77** |
| Capacity W* | DT1 = 8K | kW | **5,17** | **-** | **11,48** | **-** | **15,02** | **23,33** |
| Air flow | | $m^3/h$ | 3196 | 6930 | 6391 | 10395 | 9587 | 12160 |
| Air throw (2) | | m | 15 | 17 | 17 | 18 | 18 | 20 |
| Air throw with **RFA** option | | m | 31 | 33 | 33 | 34 | 34 | 36 |
| Sound power level - **Lp 4m** (3) | | dB(A) | 47 | 50 | 50 | 52 | 52 | 53 |

| | | SKB ... L | 06 | 09 | 11 | 14 | 18 | 22 |
|---|---|---|---|---|---|---|---|---|
| Surface | | $m^2$ | 19,5 | 26 | 39 | 39 | 60 | 73 |
| Circuit volume | | $dm^3$ | 4,85 | 6,57 | 9,69 | 9,58 | 14,36 | 17,48 |
| Fan 230-400 V/3/50 Hz 1,500 rpm. | Ø 450 mm | Nb | 1 | 2 | 2 | 3 | 3 | 4 |
| | 400 V/3/50 Hz | W max | 1 x 499 | 2 x 499 | 2 x 499 | 3 x 499 | 3 x 499 | 4 x 499 |
| | | A max (4) | 1 x 1 | 2 x 1 | 2 x 1 | 3 x 1 | 3 x 1 | 4 x 1 |
| Electric defrost **E1K** (5) | 400 V/3/50 Hz | W total | 1050 | 1500 | 2100 | 2100 | 3000 | 3600 |
| | | A total | 1,56 | 2,28 | 3,19 | 3,19 | 4,56 | 5,47 |
| Electric defrost **ELK** (5) | 400 V/3/50 Hz | W total | 2100 | 3000 | 4200 | 4200 | 6000 | 7200 |
| | | A total | 3,19 | 4,56 | 6,38 | 6,38 | 9,12 | 10,94 |
| Connections R404A | Inlet | Ø (6) | D 5/8" | D 7/8" | D 1 1/8" | D 1 1/8" | D 1 1/8" | D 1 5/8" |
| | Outlet | Ø ODF (7) | 7/8" | 1 1/8" | 1 3/8" | 1 3/8" | 1 5/8" | 1 5/8" |
| Net weight | | kg | 51 | 90 | 100 | 115 | 132 | 149 |

*(1) See page 10.*
*(2) Residual air speed: 0.25 m/s, in compliance with standard.*
*(3) Average sound pressure level in dB(A) measured at 4 m, at fan height, in direct line of sight on a reflective surface, given for information only..*
*(4) Setting of overload protection levels. For air temperatures "ti" other than +20°C, multiply the currents in relation to 293/(273 + "ti") in order to obtain an approximate current value after the chamber temperature is attained.*
*(5) Electric defrost option.*
*(6) Distributor: Male to be brazed.*
*(7) ODF: Female to receive a tube of the same diameter.*

** Glycol water:*
*Fluid: Percentage of glycol = 30% - Fluid inlet temperature = -8°C – Fluid outlet temperature = -4°C – Air: Inlet dry temp. = +2°C - Relative humidity = 85%*
*Other conditions: please contact us.*

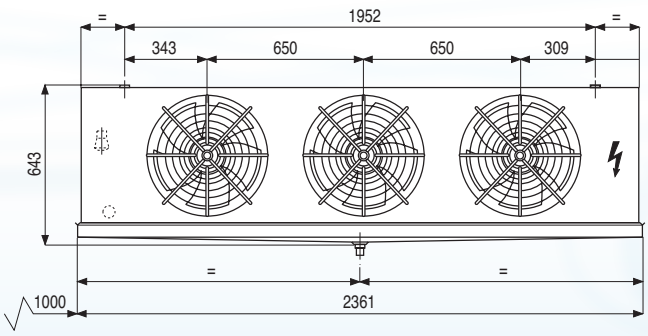


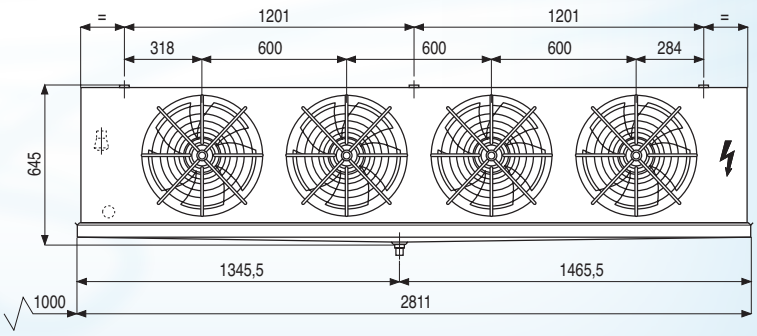


| 2V5 | MM5 | MP5 | CMU | RFA | VGT | VPM | BAE | BXT | WCO | CO2 | HG1 | HGT | E1K | E1U | ELK | ELU | RVK | RVU | 2TH | THD | THS | DM | EEC |
|---|---|---|---|---|---|---|---|---|---|---|---|---|---|---|---|---|---|---|---|---|---|---|---|
| O | O | O | O | +👤 | O | O | O | O | +👤 | - | O | - | O | O | O | O | O | O | O | O | O | O | O |

## SKB ... E

4,23 mm

| D connection | | SKB ... E | 06 | 09 | 11 | 13 | 16 | 21 |
|---|---|---|---|---|---|---|---|---|
| Capacity R404A (1) | DT1 = 7K - SC 3 | kW | 6,15 | 10,11 | 12,56 | 15,29 | 18,95 | 23,47 |
| | DT1 = 6K - SC 4 | kW | 4,86 | 8,00 | 10,00 | 12,09 | 15,13 | 18,59 |
| Air flow | | $m^3/h$ | 3900 | 8600 | 7800 | 12900 | 11700 | 15000 |
| Air throw (2) | | m | 19 | 21 | 21 | 23 | 23 | 25 |
| Air throw with **RFA** option | | m | 35 | 37 | 37 | 39 | 39 | 41 |
| Sound power level - **Lp 4m** (3) | | dB(A) | 50 | 53 | 53 | 55 | 55 | 56 |

| Y connection (2V5 option) | | SKB ... E | 06 | 09 | 11 | 13 | 16 | 21 |
|---|---|---|---|---|---|---|---|---|
| Puissance R404A (1) | DT1 = 7K - SC 3 | kW | 5,17 | 8,69 | 10,55 | 13,15 | 15,92 | 19,71 |
| | DT1 = 6K - SC 4 | kW | 4,13 | 6,96 | 8,50 | 10,52 | 12,86 | 15,80 |
| Air flow | | $m^3/h$ | 2964 | 6622 | 5928 | 9933 | 8892 | 11400 |
| Air throw (2) | | m | 15 | 17 | 17 | 18 | 18 | 20 |
| Air throw with **RFA** option | | m | 31 | 33 | 33 | 34 | 34 | 36 |
| Sound power level - **Lp 4m** (3) | | dB(A) | 47 | 50 | 50 | 52 | 52 | 53 |

| | | SKB ... E | 06 | 09 | 11 | 13 | 16 | 21 |
|---|---|---|---|---|---|---|---|---|
| Surface | | $m^2$ | 28,5 | 38 | 57 | 57 | 86 | 105 |
| Circuit volume | | $dm^3$ | 4,92 | 6,71 | 9,84 | 9,92 | 14,55 | 18,83 |
| Fan 230-400 V/3/50 Hz 1,500 rpm. | Ø 450 mm | Nb | 1 | 2 | 2 | 3 | 3 | 4 |
| | 400 V/3/50 Hz | W max | 1 x 499 | 2 x 499 | 2 x 499 | 3 x 499 | 3 x 499 | 4 x 499 |
| | | A max (4) | 1 x 1 | 2 x 1 | 2 x 1 | 3 x 1 | 3 x 1 | 4 x 1 |
| Electric defrost | Coil | Nb | 5 | 5 | 5 | 5 | 5 | 5 |
| | Drain pan | Nb | 1 | 1 | 1 | 1 | 1 | 1 |
| | 400 V/3/50 Hz | W total | 2100 | 3000 | 4200 | 4200 | 6000 | 7200 |
| | | A total | 3,19 | 4,56 | 6,38 | 6,38 | 9,12 | 10,94 |
| Electric defrost **E1K** (5) | 400 V/3/50 Hz | W total | 1050 | 1500 | 2100 | 2100 | 3000 | 3600 |
| | | A total | 1,56 | 2,28 | 3,19 | 3,19 | 4,56 | 5,47 |
| Sleeve defrost **RVU / RVK** | 230 V/1/50 Hz | W total | 1 x 500 | 2 x 500 | 2 x 500 | 3 x 500 | 3 x 500 | 4 x 500 |
| | | A total | 1 x 2,2 | 2 x 2,2 | 2 x 2,2 | 3 x 2,2 | 3 x 2,2 | 4 x 2,2 |
| Connections R404A | Inlet | Ø (6) | D 7/8" | D 1 1/8" | D 1 1/8" | D 1 1/8" | D 1 5/8" | D 1 5/8" |
| | Outlet | Ø ODF (7) | 1 1/8" | 1 3/8" | 1 5/8" | 1 5/8" | 1 5/8" | 2 1/8" |
| Net weight | | kg | 53 | 91 | 101 | 116 | 133 | 154 |

*(1) See page 10.*
*(2) Residual air speed: 0.25 m/s, in compliance with standard.*
*(3) Average sound pressure level in dB(A) measured at 4 m, at fan height, in direct line of sight on a reflective surface, given for information only..*
*(4) Setting of overload protection levels. For air temperatures "ti" other than +20°C, multiply the currents in relation to 293/(273 + "ti") in order to obtain an approximate current value after the chamber temperature is attained.*
*(5) Electric defrost option.*
*(6) Distributor: Male to be brazed.*
*(7) ODF: Female to receive a tube of the same diameter.*

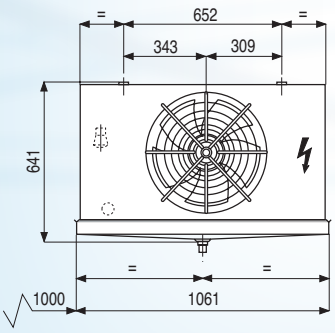


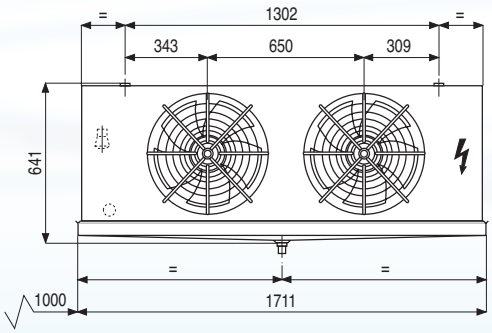


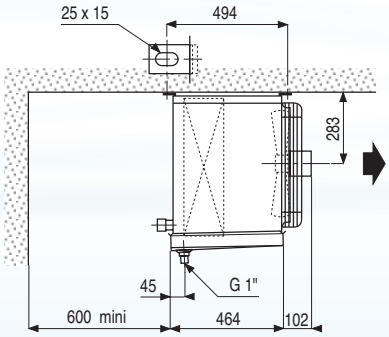


| 2V5 | MM5 | MP5 | CMU | RFA | VGT | VPM | BAE | BXT | WCO | CO2 | HG1 | HGT | E1K | E1U | ELK | ELU | RVK | RVU | 2TH | THD | THS | DM | EEC |
|---|---|---|---|---|---|---|---|---|---|---|---|---|---|---|---|---|---|---|---|---|---|---|---|
| O | O | O | O | +👤 | O | O | - | - | - | +👤 | O | O | O | O | - | - | O | O | O | O | O | O | O |

## SKB ... C

6,35 mm

| D connection | | SKB ... C | 05 | 08 | 10 | 12 | 15 | 19 |
|---|---|---|---|---|---|---|---|---|
| Capacity R404A (1) | DT1 = 7K - SC 3 | kW | 5,24 | 8,05 | 10,65 | 12,38 | 16,09 | 20,17 |
| | DT1 = 6K - SC 4 | kW | 4,17 | 6,63 | 8,53 | 9,87 | 12,89 | 16,07 |
| Capacity CO2* | DT1 = 7K - SC 3 | kW | 4,93 | 7,60 | 9,87 | 11,40 | 14,84 | 18,75 |
| | DT1 = 6K - SC 4 | kW | 4,18 | 6,45 | 8,40 | 9,68 | 12,61 | 15,94 |
| Air flow | | $m^3/h$ | 4150 | 9000 | 8300 | 13500 | 12450 | 16000 |
| Air throw (2) | | m | 19 | 21 | 21 | 23 | 23 | 25 |
| Air throw with **RFA** option | | m | 35 | 37 | 37 | 39 | 39 | 41 |
| Sound power level - **Lp 4m** (3) | | dB(A) | 50 | 53 | 53 | 55 | 55 | 56 |

| Y connection (2V5 option) | | SKB ... C | 05 | 08 | 10 | 12 | 15 | 19 |
|---|---|---|---|---|---|---|---|---|
| Capacity R404A (1) | DT1 = 7K - SC 3 | kW | 4,40 | 6,84 | 8,95 | 10,52 | 13,52 | 17,14 |
| | DT1 = 6K - SC 4 | kW | 3,50 | 5,70 | 7,17 | 8,49 | 10,83 | 13,82 |
| Air flow | | $m^3/h$ | 3196 | 6930 | 6391 | 10395 | 9587 | 12160 |
| Air throw (2) | | m | 15 | 17 | 17 | 18 | 18 | 20 |
| Air throw with **RFA** option | | m | 31 | 33 | 33 | 34 | 34 | 36 |
| Sound power level - **Lp 4m** (3) | | dB(A) | 47 | 50 | 50 | 52 | 52 | 53 |

| | | SKB ... C | 05 | 08 | 10 | 12 | 15 | 19 |
|---|---|---|---|---|---|---|---|---|
| Surface | | $m^2$ | 19,5 | 26 | 39 | 39 | 60 | 73 |
| Circuit volume | | $dm^3$ | 4,92 | 6,71 | 9,84 | 9,92 | 14,55 | 18,83 |
| Fan 230-400 V/3/50 Hz 1,500 rpm. | Ø 450 mm | Nb | 1 | 2 | 2 | 3 | 3 | 4 |
| | 400 V/3/50 Hz | W max | 1 x 499 | 2 x 499 | 2 x 499 | 3 x 499 | 3 x 499 | 4 x 499 |
| | | A max (4) | 1 x 1 | 2 x 1 | 2 x 1 | 3 x 1 | 3 x 1 | 4 x 1 |
| Electric defrost | Coil | Nb | 5 | 5 | 5 | 5 | 5 | 5 |
| | Drain pan | Nb | 1 | 1 | 1 | 1 | 1 | 1 |
| | 400 V/3/50 Hz | W total | 2100 | 3000 | 4200 | 4200 | 6000 | 7200 |
| | | A total | 3,19 | 4,56 | 6,38 | 6,38 | 9,12 | 10,94 |
| Electric defrost **E1K** (5) | 400 V/3/50 Hz | W total | 1050 | 1500 | 2100 | 2100 | 3000 | 3600 |
| | | A total | 1,56 | 2,28 | 3,19 | 3,19 | 4,56 | 5,47 |
| Sleeve defrost **RVU / RVK** | 230 V/1/50 Hz | W total | 1 x 500 | 2 x 500 | 2 x 500 | 3 x 500 | 3 x 500 | 4 x 500 |
| | | A total | 1 x 2,2 | 2 x 2,2 | 2 x 2,2 | 3 x 2,2 | 3 x 2,2 | 4 x 2,2 |
| Connections R404A | Inlet | Ø (6) | D 7/8" | D 1 1/8" | D 1 1/8" | D 1 1/8" | D 1 5/8" | D 1 5/8" |
| | Outlet | Ø ODF (7) | 1 1/8" | 1 3/8" | 1 5/8" | 1 5/8" | 1 5/8" | 2 1/8" |
| Connections CO2 | Inlet | Ø (6) | 5/8" | 5/8" | 5/8" | 5/8" | 7/8" | 7/8" |
| | Outlet | Ø ODF (7) | 3/4" | 7/8" | 7/8" | 7/8" | 7/8" | 1 3/8" |
| Net weight | | kg | 52 | 91 | 101 | 116 | 133 | 154 |

** Tube diameter to define the order.*

*(1) See page 10.*
*(2) Residual air speed: 0.25 m/s, in compliance with standard.*
*(3) Average sound pressure level in dB(A) measured at 4 m, at fan height, in direct line of sight on a reflective surface, given for information only..*
*(4) Setting of overload protection levels. For air temperatures "ti" other than +20°C, multiply the currents in relation to 293/(273 + "ti") in order to obtain an approximate current value after the chamber temperature is attained.*
*(5) Electric defrost option.*
*(6) Distributor: Male to be brazed.*
*(7) ODF: Female to receive a tube of the same diameter.*

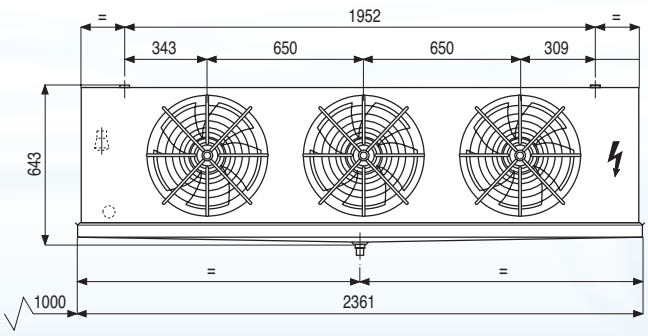


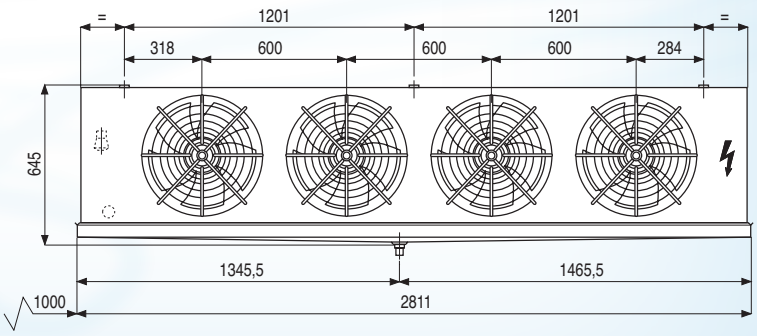


| 2V5 | MM5 | MP5 | CMU | RFA | VGT | VPM | BAE | BXT | WCO | CO2 | HG1 | HGT | E1K | E1U | ELK | ELU | RVK | RVU | 2TH | THD | THS | DM | EEC |
|---|---|---|---|---|---|---|---|---|---|---|---|---|---|---|---|---|---|---|---|---|---|---|---|
| O | O | O | O | +👤 | O | O | - | - | - | +👤 | O | O | O | O | - | - | O | O | O | O | O | O | O |

HEATCRAFT™
Worldwide Refrigeration

# Dual-discharge unit cooler

EUROVENT CERTIFIED PERFORMANCE
www.eurovent-certification.com

E Solutions
Efficiency • Environment

## Direct expansion industrial range GTI/GT2I
## Glycol water industrial range GTI-W/GT2I-W

- The 88 models of the GTI and GT2I range meet the workplace comfort requirements for laboratories, meat cutting rooms, air locks, etc...
- Exceptionally low noise levels with the 8P (GTI) and 12P (GT2I) models.
- The low air flow speed guarantees comfort as well as accurate control of both temperature and hygrometry for the 8P and 12P models.
- The 2-speed electric fans guarantee appropriate noise levels and ventilation (GT2I).

*Reduced sound*
*Natural fluids:*
*Glycol water*

GT2I / GT2I-W  GTI / GTI-W

12.5 ... 123.5 kW

FRIGA-BOHN  HYFRA® PEDIA  HK® REFRIGERATION

Heatcraft reserves itself the right to make changes at any time without preliminary notice - Photos non-contractual

# GTI (-W) / GT2I (-W) - Dual-discharge industrial unit cooler

## Market segments

*FSM Hard Discount - Supermarkets - Hypermarkets*
*FCS Refrigerated storage and transit stocking - Dispatch centres – Food processing – Canteen kitchens*

## Designation

**GTI(1)-W(2) 34(3)4(4) 4P(5)**
**GT2I(1)-W(2) 36(3) R(4) 6/8P(5)**

(1) **GTI / GT2I**: Direct expansion unit cooler
(2) **W**: Glycol water unit cooler
(3) Model
(4) Fin spacing: **4** or **R** = 4.23 mm - **7** or **L** = 6,35 mm
(5) **4P** = 1,500 rpm - **6P** = 1,000 rpm - **8P** = 750 rpm
**6P/8P** = 1,000/750 rpm. - **8P/12P** = 750/500 rpm.

## Description

### Casing

- The GTI (-W) and GT2I (-W) casing is made of white pre-painted galvanized steel.
- All models of the GTI (-W) and GT2I (-W) range are equipped with intermediate drain pans for the recovery of condensation.
- On the GT2I (-W), each removable (in 1 or 2 sections depending on the models), external drain pan evacuates into a recovery vessel located next to the refrigeration connections and from where the condensation is evacuated via a large dimension drain pipe (Ø 1 1/2" G).
- GTI (-W) and GT2I (-W) models are foreseen with end covers.
- GTI (-W) and GT2I (-W) are delivered on a wooden base.
- GT2I (-W) are delivered in their mounting position and designed for installation flush to the ceiling.

### Ventilation

- The GTI (-W) unit cooler range is equipped with fans Ø 450 mm, 230-400 V/3/50 Hz: 4P = 1,500 rpm, 6P = 1,000 rpm or 8P = 750 rpm
- The GT2I (-W) unit cooler range is equipped with fans Ø 630 mm, 400 V/3/50 Hz, IP 55, class F, with incorporated thermal overload protection, 2 speeds depending on models (factory wired: Δ = high speed): 6/8 P = 1,000/750 rpm or 8/12 P = 750/500 rpm.
- Fan guards are compliant with safety standards.

### Coil

- **The GT2I range is equipped with two new coil configurations optimized for direct expansion and glycol water applications.**
- The highly-efficient and compact standard finned coils of the GTI (-W) and GT2I (-W) range are composed of aluminium fins with a spacing of 4.23 or 6.35 mm.

## Certifications

EUROVENT CERTIFIED PERFORMANCE www.eurovent-certification.com

## Advantages

### Installation

Possibility of supplying a connection kit (option EGK) for the glycol water model to render installation easier.

Intermediate drain pans enabling installation of optional electric defrost ELU or EEK kit on the GT2I (-W).

Single flow for easier installation.

### Servicing / Maintenance

GT2I (-W) are equipped with hinged doors and a removable central panel enabling east access to electrical and refrigeration connections.

For all work on the GT2I (-W), access to the drain pans does not require removal of the recovery vessel.

## Options

| Kit | Factory | |
|---|---|---|
| | | **Ventilation - GTI / GTI-W** |
| | M60 | Fans 230-400V/3/60Hz (adapted fan blades). |
| | MM5 | Fans 230V/1/50Hz. |
| | MM6 | Fans 230V/1/60Hz. |
| | | **Ventilation - GT2I / GT2I-W** |
| | CMU* | CMU* Motors factory wired. ***CMU = CT5, CT6, CM5 or CM6** |
| | CT5 | Single-speed wiring 400V/3/50Hz |
| | CT6 | Single-speed wiring 400V/3/60Hz |
| | CM5 | Single-speed wiring 230V/1/50Hz |
| | CM6 | Single-speed wiring 230V/1/60Hz |
| | M60 | Fans 230-400V/3/60Hz (adapted fan blades). |
| | | **Coil** |
| | BXT | Blygold Polual XT coil protection. |
| | WCO | Glycol water, coolant (please contact us for details). |
| EGK | | Glycol water and coolant extension. |
| | | **Defrost - GTI / GTI-W** |
| E1K | E1U | Light electric defrost. |
| | HGB | Hot gas defrost (coil only). |
| | | **Defrost - GT2I / GT2I-W** |
| E1K | E1U | Light electric defrost. |
| | ELU | Electric defrost (coil + drain pan). |
| | HG1 | Defrost with hot gas (coil: hot gas, drain pan: heating elements). |
| EEK | | Drain pan electric defrost. |
| ECK | ECU | Additional coil electric defrost. |
| | | **Miscellaneous** |
| | ECB | Full crate packaging (**GT2I / GT2I-W**). |
| | EIS | Insulated drain pan. |
| | | **Other options** |
| | | Please contact us for details. |

## GTI / GTI-W

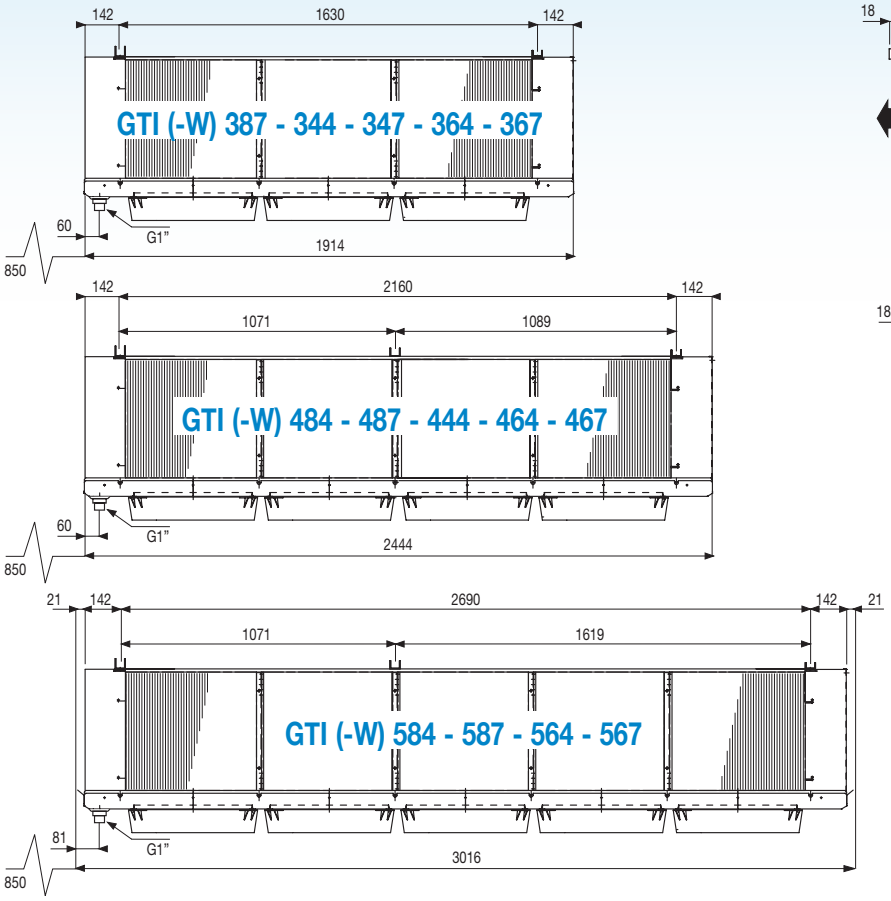


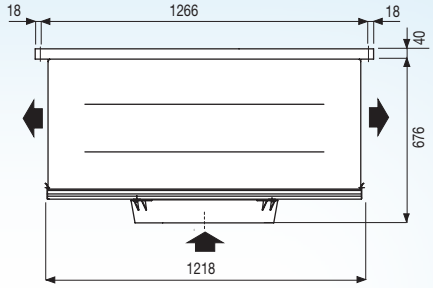


GTI (-W)
387
484 - 487
584 - 587

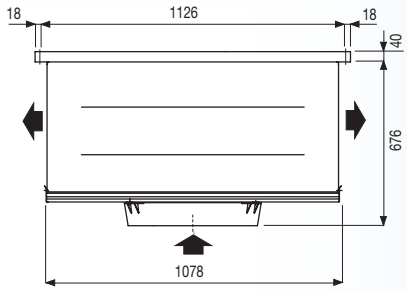


GTI (-W)
344 - 347
364 - 367
444 - 464 - 467
564 - 567

mm

## GT2I / GT2I-W

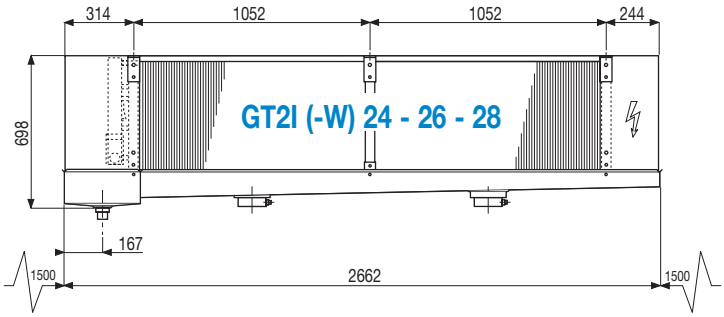


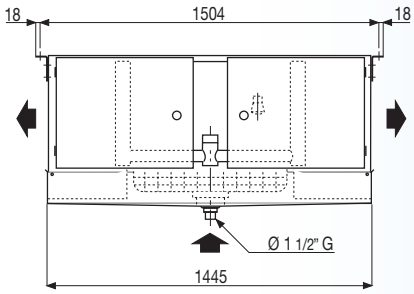


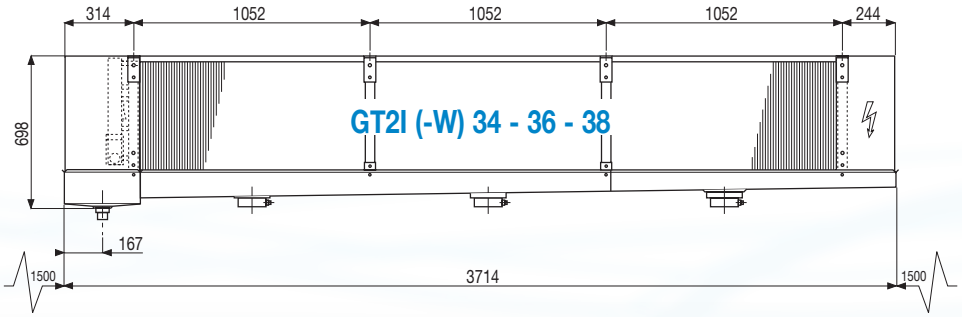


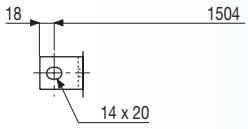


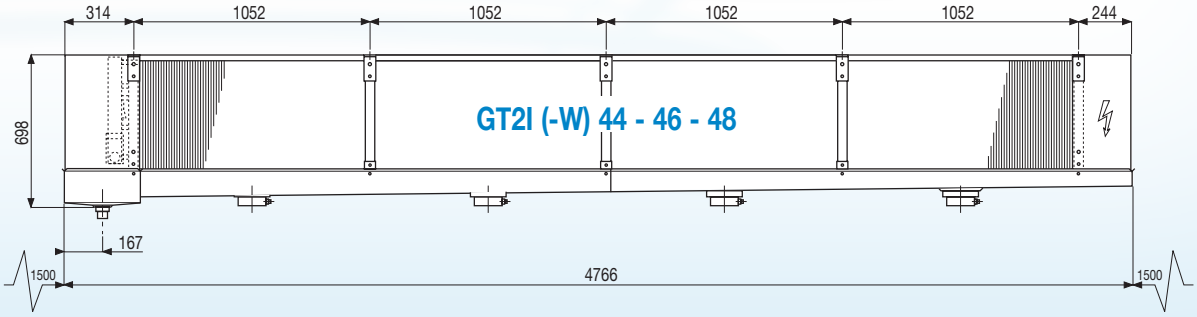

## GTI (-W) ... 4/6/8P - 1,500/1,000/750 rpm.

4,23 mm

| Direct expansion | | GTI ... 4/6/8P | | 344 | 364 | 444 | 464 | 484 | 564 | 584 |
|---|---|---|---|---|---|---|---|---|---|---|
| Capacity R404A (1) | DT1 = 10 K - SC1 | 4P | kW | 33,7 | 42,5 | 45,1 | 57,6 | 66,3 | 68,8 | 73,1 |
| | | 6P | kW | 27,8 | 34,5 | 37,5 | 46,1 | 51,7 | 55,8 | 60,1 |
| | | 8P | kW | 23,4 | 28,0 | 32,1 | 37,5 | 40,8 | 45,6 | 49,6 |
| | DT1 = 8 K - SC2 | 4P | kW | 18,0 | 21,5 | 23,1 | 30,1 | 34,7 | 38,9 | 41,3 |
| | | 6P | kW | 14,8 | 17,9 | 18,9 | 25,0 | 28,1 | 30,9 | 33,3 |
| | | 8P | kW | 12,6 | 14,5 | 17,0 | 20,4 | 22,2 | 25,2 | 26,4 |

| Glycol water | | GTI-W ... 4/6/8P | | 344 | 364 | 444 | 464 | 484 | 564 | 584 |
|---|---|---|---|---|---|---|---|---|---|---|
| Capacity W* | DT1 = 8 K | 4P | kW | 19,5 | 26,0 | 24,0 | 32,4 | 45,0 | 40,5 | 48,5 |
| | | 6P | kW | 16,5 | 21,6 | 20,7 | 28,9 | 33,5 | 33,9 | 39,6 |
| | | 8P | kW | 14,9 | 18,8 | 19,0 | 24,0 | 28,0 | 31,3 | 34,1 |

| | | GTI (-W) ... 4/6/8P | | 344 | 364 | 444 | 464 | 484 | 564 | 584 |
|---|---|---|---|---|---|---|---|---|---|---|
| Surface | | | $m^2$ | 98 | 147 | 133 | 200 | 266 | 245 | 326 |
| Circuit volume | | | $dm^3$ | 20,2 | 30,3 | 26,5 | 39,8 | 53,0 | 49,3 | 65,7 |
| Fan ** | Air flow | 4P | $m^3/h$ | 13950 | 13350 | 18600 | 17800 | 17000 | 22250 | 21250 |
| | | 6P | $m^3/h$ | 9360 | 8960 | 12480 | 11950 | 11410 | 14930 | 14260 |
| | | 8P | $m^3/h$ | 6670 | 6390 | 8900 | 8500 | 8130 | 10650 | 10170 |
| | Air throw (2) | 4P | m | 2 x 7 | 2 x 7 | 2 x 7 | 2 x 7 | 2 x 7 | 2 x 7 | 2 x 7 |
| | | 6P | m | 2 x 5 | 2 x 5 | 2 x 5 | 2 x 5 | 2 x 5 | 2 x 5 | 2 x 5 |
| | | 8P | m | 2 x 4 | 2 x 4 | 2 x 4 | 2 x 4 | 2 x 4 | 2 x 4 | 2 x 4 |
| | Ø 450 mm | | Nb | 3 | 3 | 4 | 4 | 4 | 5 | 5 |
| Acoustic | Lp 4m (3) | 4P | dB(A) | 50 | 50 | 51 | 51 | 51 | 52 | 52 |
| | | 6P | dB(A) | 40 | 40 | 41 | 41 | 41 | 42 | 42 |
| | | 8P | dB(A) | 33 | 33 | 34 | 34 | 34 | 35 | 35 |
| Electric defrost E1U | Ω | | Nb | 6 | 6 | 6 | 6 | 6 | 6 | 6 |
| | 400 V/3/50 Hz | | W Total | 6000 | 6000 | 9240 | 9240 | 9240 | 12000 | 12000 |
| | | | A Total | 9 | 9 | 14 | 14 | 14 | 18 | 18 |
| Connections R404A | Inlet | | Ø (5) | 7/8" | 1" 1/8 | 1" 1/8 | 1" 1/8 | 1"1/8 | 1" 1/8 | 1" 3/8 |
| | Outlet | | Ø (6) | 1" 5/8 | 1" 5/8 | 2" 1/8 | 2" 1/8 | 2" 1/8 | 2" 5/8 | 2" 5/8 |
| Net weight | | | kg | 181 | 215 | 228 | 264 | 307 | 326 | 379 |

*** Ø 450 mm - 230-400 V/3/50 Hz. 4P : 360 W max - 1 A max (4). 6P : 115 W max - 0,5 A max (4). 8P : 72 W max - 0,42 A max (4).*

*(1) See page 10.*
*(2) Residual air speed: 0.25 m/s, in compliance with standard.*
*(3) Average sound pressure level in dB(A) measured at 4 m, at fan height, in direct line of sight on a reflective surface, given for information only.*
*(4) Setting of overload protection levels.*
*(5) Distributor: Male to be brazed.*
*(6) ODF = Female to receive a tube of the same diameter.*

*** Glycol water** - *Capacity indicated for information only under the following conditions:*

***Fluid:*** *Percentage of glycol = 30 %*
*Fluid inlet temperature = - 8°C*
*Fluid outlet temperature = - 4°C.*

***Air:*** *Inlet dry temperature = + 2°C*
*Relative humidity = 85 %*
*Limitation of head loss at 10 m WC maximum.*

***Other conditions:***
*Possible optimization of exchanger circuiting according to the operating level.*
*System head loss taken into account, percentage of glycol,... (please contact us for details).*

***Connection kit available:***
- *1 kit for horizontal connection (please consult us).*
- *4 connection kits (please consult us).*
  - *steel weld-on sleeve*
  - *steel screw-on sleeve*
  - *steel weld-on sleeve*
  - *steel screw-on sleeve*

| M60 | MM5 | MM6 | BAE | BXT | WCO | E1K | E1U | HGB | EGK | EIS |
|---|---|---|---|---|---|---|---|---|---|---|
| O | O | O | | O | | O | O | O | O | O |

## GTI (-W) ... 4/6/8P - 1,500/1,000/750 rpm. 6,35 mm

| Direct expansion | | GTI ... 4/6/8P | | 347 | 367 | 387 | 467 | 487 | 567 | 587 |
|---|---|---|---|---|---|---|---|---|---|---|
| Capacity R404A (1) | DT1 = 10 K - SC1 | 4P | kW | 28,3 | 37,7 | 46,7 | 53,0 | 62,8 | 65,2 | 73,6 |
| | | 6P | kW | 24,5 | 30,1 | 36,3 | 42,2 | 48,7 | 52,3 | 57,1 |
| | | 8P | kW | 21,0 | 26,1 | 29,3 | 34,9 | 39,2 | 45,3 | 48,8 |
| | DT1 = 8 K - SC2 | 4P | kW | 15,1 | 20,2 | 25,0 | 28,4 | 33,7 | 34,9 | 39,5 |
| | | 6P | kW | 13,2 | 16,1 | 19,5 | 22,6 | 26,1 | 28,0 | 30,6 |
| | | 8P | kW | 11,3 | 14,0 | 15,7 | 18,7 | 21,0 | 24,3 | 26,1 |

| Glycol water | | GTI-W ... 4/6/8P | | 347 | 367 | 387 | 467 | 487 | 567 | 587 |
|---|---|---|---|---|---|---|---|---|---|---|
| Capacity W* | DT1 = 8 K | 4P | kW | 17,4 | 23,6 | 30,3 | 35,4 | 38,3 | 36,9 | 45,1 |
| | | 6P | kW | 15,8 | 21,2 | 24,2 | 26,2 | 31,1 | 31,0 | 38,9 |
| | | 8P | kW | 13,0 | 17,1 | 20,5 | 21,9 | 26,2 | 27,3 | 31,8 |

| | | GTI (-W) ... 4/6/8P | | 347 | 367 | 387 | 467 | 487 | 567 | 587 |
|---|---|---|---|---|---|---|---|---|---|---|
| Surface | | | $m^2$ | 68 | 102 | 136 | 137 | 182 | 170 | 226 |
| Circuit volume | | | $dm^3$ | 20,2 | 30,3 | 40,4 | 39,8 | 53,0 | 49,3 | 65,7 |
| Fan ** | Air flow | 4P | $m^3/h$ | 14160 | 13680 | 13260 | 18240 | 17680 | 22800 | 22100 |
| | | 6P | $m^3/h$ | 9500 | 9180 | 8900 | 12240 | 11860 | 15300 | 14830 |
| | | 8P | $m^3/h$ | 6770 | 6540 | 6340 | 8730 | 8460 | 10910 | 10570 |
| | Air throw (2) | 4P | m | 2 x 7 | 2 x 7 | 2 x 7 | 2 x 7 | 2 x 7 | 2 x 7 | 2 x 7 |
| | | 6P | m | 2 x 5 | 2 x 5 | 2 x 5 | 2 x 5 | 2 x 5 | 2 x 5 | 2 x 5 |
| | | 8P | m | 2 x 4 | 2 x 4 | 2 x 4 | 2 x 4 | 2 x 4 | 2 x 4 | 2 x 4 |
| | Ø 450 mm | | Nb | 3 | 3 | 3 | 4 | 4 | 5 | 5 |
| Acoustic | Lp 4m (3) | 4P | dB(A) | 50 | 50 | 50 | 51 | 51 | 52 | 52 |
| | | 6P | dB(A) | 40 | 40 | 40 | 41 | 41 | 42 | 42 |
| | | 8P | dB(A) | 33 | 33 | 33 | 34 | 34 | 35 | 35 |
| Electric defrost E1U | Ω | | Nb | 6 | 6 | 6 | 6 | 6 | 6 | 6 |
| | 400 V/3/50 Hz | | W Total | 6000 | 6000 | 6000 | 9240 | 9240 | 12000 | 12000 |
| | | | A Total | 9 | 9 | 9 | 14 | 14 | 18 | 18 |
| Connections R404A | Inlet | | Ø (5) | 7/8" | 1" 1/8 | 1" 1/8 | 1" 1/8 | 1"1/8 | 1" 1/8 | 1" 3/8 |
| | Outlet | | Ø (6) | 1" 5/8 | 1" 5/8 | 1" 5/8 | 2" 1/8 | 2" 1/8 | 2" 1/8 | 2" 5/8 |
| Net weight | | | kg | 171 | 198 | 217 | 241 | 280 | 298 | 347 |

*** Ø 450 mm - 230-400 V/3/50 Hz. 4P : 360 W max - 1 A max (4). 6P : 115 W max - 0,5 A max (4). 8P : 72 W max - 0,42 A max (4).*

*(1) See page 10.*
*(2) Residual air speed: 0.25 m/s, in compliance with standard.*
*(3) Average sound pressure level in dB(A) measured at 4 m, at fan height, in direct line of sight on a reflective surface, given for information only.*
*(4) Setting of overload protection levels.*
*(5) Distributor: Male to be brazed.*
*(6) ODF = Female to receive a tube of the same diameter.*

*** Glycol water** - *Capacity indicated for information only under the following conditions:*

***Fluid:*** *Percentage of glycol = 30 %*
*Fluid inlet temperature = - 8°C*
*Fluid outlet temperature = - 4°C.*

***Air:*** *Inlet dry temperature = + 2°C*
*Relative humidity = 85 %*
*Limitation of head loss at 10 m WC maximum.*

***Other conditions:***
*Possible optimization of exchanger circuiting according to the operating level.*
*System head loss taken into account, percentage of glycol,... (please contact us for details).*

***Connection kit available:***
- *1 kit for horizontal connection (please consult us).*
- *4 connection kits (please consult us).*
  - *steel weld-on sleeve*
  - *steel screw-on sleeve*
  - *steel weld-on sleeve*
  - *steel screw-on sleeve*

| M60 | MM5 | MM6 | BAE | BXT | WCO | E1K | E1U | HGB | EGK | EIS |
|---|---|---|---|---|---|---|---|---|---|---|
| O | O | O | +👤 | O | +👤 | O | O | O | O | O |

## GT2I ... R 6/8P - 1,000/750 rpm. 4,23 mm

| Direct expansion | | GT2I ... R 6/8P | | 24 | 26 | 28 | 34 | 36 | 38 | 44 | 46 | 48 |
|---|---|---|---|---|---|---|---|---|---|---|---|---|
| Capacity R404A (1) | DT1 = 10 K - SC1 | 6P | kW | 47,9 | 57,7 | 61,6 | 72,0 | 86,4 | 90,6 | 96,1 | 112,7 | 123,3 |
| | | 8P | kW | 43,2 | 50,6 | 53,0 | 64,9 | 73,6 | 78,3 | 86,6 | 100,1 | 105,8 |
| | DT1 = 8 K - SC2 | 6P | kW | 26,7 | 33,5 | 37,6 | 40,2 | 50,3 | 55,6 | 53,6 | 66,5 | 75,4 |
| | | 8P | kW | 24,5 | 30,0 | 32,9 | 36,8 | 44,2 | 49,0 | 49,2 | 59,9 | 65,9 |
| Surface | | | $m^2$ | 130 | 195 | 260 | 195 | 292 | 390 | 260 | 390 | 520 |
| Circuit volume | | | $dm^3$ | 25 | 38 | 50 | 38 | 57 | 75 | 50 | 75 | 101 |
| Fan * | Air flow | 6P | $m^3/h$ | 22656 | 20896 | 19297 | 33984 | 31345 | 28945 | 45312 | 41793 | 38593 |
| | | 8P | $m^3/h$ | 18706 | 17067 | 15503 | 28059 | 25600 | 23255 | 37412 | 34133 | 31007 |
| | Air throw (2) | 6P | m | 2 x 17 | 2 x 15 | 2 x 14 | 2 x 17 | 2 x 15 | 2 x 14 | 2 x 17 | 2 x 15 | 2 x 14 |
| | | 8P | m | 2 x 14 | 2 x 12 | 2 x 11 | 2 x 14 | 2 x 12 | 2 x 11 | 2 x 14 | 2 x 12 | 2 x 11 |
| | Ø 630 mm | | Nb | 2 | 2 | 2 | 3 | 3 | 3 | 4 | 4 | 4 |
| Acoustic | Lp 4m (3) | 6P | dB(A) | 50 | 50 | 50 | 52 | 52 | 52 | 53 | 53 | 53 |
| | | 8P | dB(A) | 46 | 46 | 46 | 48 | 48 | 48 | 49 | 49 | 49 |
| Electric defrost E1U/E1K (4) | Ω | | Nb | 12 | 12 | 12 | 12 | 12 | 12 | 12 | 12 | 12 |
| | 400 V/3/50 Hz | | W Total | 9000 | 9000 | 9000 | 13800 | 13800 | 13800 | 18000 | 18000 | 18000 |
| | | | A Total | 13 | 13 | 13 | 20 | 20 | 20 | 26 | 26 | 26 |
| Electric defrost ELU/E1K+EEK (4) | Ω | | Nb | 12+6 | 12+6 | 12+6 | 12+6 | 12+6 | 12+6 | 12+6 | 12+6 | 12+6 |
| | 400 V/3/50 Hz | | W Total | 13500 | 13500 | 13500 | 20700 | 20700 | 20700 | 27000 | 27000 | 27000 |
| | | | A Total | 19,5 | 19,5 | 19,5 | 30 | 30 | 30 | 39 | 39 | 39 |
| ECK kit or EEK kit | Ω | | Nb | 6 | 6 | 6 | 6 | 6 | 6 | 6 | 6 | 6 |
| | 400 V/3/50 Hz | | W Total | 4500 | 4500 | 4500 | 6900 | 6900 | 6900 | 9000 | 9000 | 9000 |
| | | | A Total | 6,5 | 6,5 | 6,5 | 10 | 10 | 10 | 13 | 13 | 13 |
| | Nb max. kit | | ECK | 1 | 1 | 2 | 1 | 1 | 2 | 1 | 1 | 2 |
| | | | EEK | 1 | 1 | 1 | 1 | 1 | 1 | 1 | 1 | 1 |
| Connections R404A | Inlet | | Ø (6) | 1" 1/8 | 1" 3/8 | 1" 3/8 | 1" 3/8 | 1" 5/8 | 1" 5/8 | 1" 5/8 | 2x 1" 3/8 | 2x 1" 3/8 |
| | Outlet | | Ø (7) | 1" 5/8 | 1" 5/8 | 1" 5/8 | 2" 1/8 | 2" 1/8 | 2" 1/8 | 2" 1/8 | 2" 5/8 | 2" 5/8 |
| Net weight | | | kg | 260 | 292 | 316 | 349 | 395 | 433 | 457 | 506 | 549 |

** Ø 630 mm - 400 V/3/50 Hz. 6P : 980 W max - 2,3 A max (5). 8P : 720 W max - 1,3 A max (5).*

*(1) See page 10.*
*(2) Residual air speed: 0.25 m/s, in compliance with standard.*
*(3) Average sound pressure level in dB(A) measured at 4 m, at fan height, in direct line of sight on a reflective surface, given for information only.*
*(4) Optional electric defrost kit.*
*(5) Setting of overload protection levels.*
*(6) Distributor: Male to be brazed.*
*(7) ODF = Female to receive a tube of the same diameter.*

# Optimized coil for glycol water applications

## GT2I-W ... R 6/8P - 1,000/750 rpm. 4,23 mm

| Glycol water | | GT2I-W ... R 6/8P | | 24 | 26 | 28 | 34 | 36 | 38 | 44 | 46 | 48 |
|---|---|---|---|---|---|---|---|---|---|---|---|---|
| Capacity W* | DT1 = 8 K | 6P | kW | 33,0 | 48,1 | - | 54,0 | 63,4 | - | 63,1 | 95,5 | - |
| | | 8P | kW | 17,7 | 36,6 | - | 53,3 | 54,1 | - | 54,6 | 65,9 | - |
| Surface | | | $m^2$ | 164 | 246 | - | 246 | 369 | - | 328 | 492 | - |

*** Glycol water** - *Capacity indicated for information only under the following conditions:*

***Fluid:*** *Percentage of glycol = 30 %*
*Fluid inlet temperature = - 8°C*
*Fluid outlet temperature = - 4°C.*

***Air:*** *Inlet dry temperature = + 2°C*
*Relative humidity = 85 %*
*Limitation of head loss at 10 m WC maximum.*

***Other conditions:***
*Possible optimization of exchanger circuiting according to the operating level.*
*System head loss taken into account, percentage of glycol,... (please contact us for details).*

***Connection kit available:***
- *1 kit for horizontal connection (please consult us).*
- *4 connection kits (please consult us).*
  - *steel weld-on sleeve*
  - *steel screw-on sleeve*
  - *steel weld-on sleeve*
  - *steel screw-on sleeve*

| CMU | CT5 | CT6 | CM5 | CM6 | M60 | BAE | BXT | WCO | E1K | E1U | ELU | HG1 | EEK | ECK | ECU | EGK | ECB | EIS |
|---|---|---|---|---|---|---|---|---|---|---|---|---|---|---|---|---|---|---|
| O | O | O | O | O | O | +👤 | O | +👤 | O | O | O | O | O | O | O | O | O | O |

## GT2I ... R 8/12P - 750/500 rpm. 4,23 mm

| Direct expansion | | GT2I ... R 8/12P | | 24 | 26 | 28 | 34 | 36 | 38 | 44 | 46 | 48 |
|---|---|---|---|---|---|---|---|---|---|---|---|---|
| Capacity R404A (1) | DT1 = 10 K - SC1 | 8P | kW | 40,8 | 46,0 | 49,9 | 61,2 | 69,1 | 74,3 | 81,7 | 94,0 | 99,6 |
| | | 12P | kW | 36,9 | 41,0 | 40,5 | 55,3 | 61,5 | 63,8 | 72,7 | 83,2 | 81,7 |
| | DT1 = 8 K - SC2 | 8P | kW | 23,3 | 27,9 | 31,1 | 35,1 | 41,9 | 46,4 | 46,8 | 57,0 | 62,5 |
| | | 12P | kW | 21,4 | 25,2 | 25,8 | 32,2 | 37,9 | 40,6 | 42,8 | 51,0 | 51,6 |
| Surface | | | $m^2$ | 130 | 195 | 260 | 195 | 292 | 390 | 260 | 390 | 520 |
| Circuit volume | | | $dm^3$ | 25 | 38 | 50 | 38 | 57 | 75 | 50 | 75 | 101 |
| Fan * | Air flow | 8P | $m^3/h$ | 16488 | 15183 | 14001 | 24732 | 22775 | 21002 | 32976 | 30367 | 28002 |
| | | 12P | $m^3/h$ | 14007 | 12757 | 11611 | 21011 | 19135 | 17417 | 28014 | 25513 | 23223 |
| | Air throw (2) | 8P | m | 2 x 12 | 2 x 11 | 2 x 10 | 2 x 12 | 2 x 11 | 2 x 10 | 2 x 12 | 2 x 11 | 2 x 10 |
| | | 12P | m | 2 x 10 | 2 x 9 | 2 x 8 | 2 x 10 | 2 x 9 | 2 x 8 | 2 x 10 | 2 x 9 | 2 x 8 |
| | Ø 630 mm | | Nb | 2 | 2 | 2 | 3 | 3 | 3 | 4 | 4 | 4 |
| Acoustic | Lp 4m (3) | 8P | dB(A) | 43 | 43 | 43 | 45 | 45 | 45 | 46 | 46 | 46 |
| | | 12P | dB(A) | 38 | 38 | 38 | 40 | 40 | 40 | 41 | 41 | 41 |
| Electric defrost E1U/E1K (4) | Ω | | Nb | 12 | 12 | 12 | 12 | 12 | 12 | 12 | 12 | 12 |
| | 400 V/3/50 Hz | | W Total | 9000 | 9000 | 9000 | 13800 | 13800 | 13800 | 18000 | 18000 | 18000 |
| | | | A Total | 13 | 13 | 13 | 20 | 20 | 20 | 26 | 26 | 26 |
| Electric defrost ELU/E1K+EEK (4) | Ω | | Nb | 12+6 | 12+6 | 12+6 | 12+6 | 12+6 | 12+6 | 12+6 | 12+6 | 12+6 |
| | 400 V/3/50 Hz | | W Total | 13500 | 13500 | 13500 | 20700 | 20700 | 20700 | 27000 | 27000 | 27000 |
| | | | A Total | 19,5 | 19,5 | 19,5 | 30 | 30 | 30 | 39 | 39 | 39 |
| ECK kit or EEK kit | Ω | | Nb | 6 | 6 | 6 | 6 | 6 | 6 | 6 | 6 | 6 |
| | 400 V/3/50 Hz | | W Total | 4500 | 4500 | 4500 | 6900 | 6900 | 6900 | 9000 | 9000 | 9000 |
| | | | A Total | 6,5 | 6,5 | 6,5 | 10 | 10 | 10 | 13 | 13 | 13 |
| | Nb max. kit | | ECK | 1 | 1 | 2 | 1 | 1 | 2 | 1 | 1 | 2 |
| | | | EEK | 1 | 1 | 1 | 1 | 1 | 1 | 1 | 1 | 1 |
| Connections R404A | Inlet | | Ø (6) | 1" 1/8 | 1" 1/8 | 1" 3/8 | 1" 3/8 | 1" 5/8 | 1" 5/8 | 1" 5/8 | 1" 5/8 | 2x 1" 3/8 |
| | Outlet | | Ø (7) | 1" 3/8 | 1" 5/8 | 1" 5/8 | 2" 1/8 | 2" 1/8 | 2" 1/8 | 2" 1/8 | 2" 1/8 | 2" 5/8 |
| Net weight | | | kg | 260 | 292 | 316 | 349 | 395 | 433 | 457 | 506 | 549 |

** Ø 630 mm - 400 V/3/50 Hz. 8P : 500 W max - 1,5 A max (5). 12P : 350 W max - 0,8 A max (5).*

*(1) See page 10.*
*(2) Residual air speed: 0.25 m/s, in compliance with standard.*
*(3) Average sound pressure level in dB(A) measured at 4 m, at fan height, in direct line of sight on a reflective surface, given for information only.*
*(4) Optional electric defrost kit.*
*(5) Setting of overload protection levels.*
*(6) Distributor: Male to be brazed.*
*(7) ODF = Female to receive a tube of the same diameter.*

# Optimized coil for glycol water applications

## GT2I-W ... R 8/12P - 750/500 rpm. 4,23 mm

| Glycol water | | GT2I-W ... R 8/12P | | 24 | 26 | 28 | 34 | 36 | 38 | 44 | 46 | 48 |
|---|---|---|---|---|---|---|---|---|---|---|---|---|
| Capacity W* | DT1 = 8 K | 8P | kW | 26,2 | 38,1 | - | 48,1 | 51,5 | - | 53,0 | 77,8 | - |
| | | 12P | kW | 24,1 | 37,2 | - | 40,3 | 43,1 | - | 49,2 | 74,1 | - |
| Surface | | | $m^2$ | 164 | 246 | - | 246 | 369 | - | 328 | 492 | - |

*** Glycol water** - *Capacity indicated for information only under the following conditions:*

***Fluid:*** *Percentage of glycol = 30 %*
*Fluid inlet temperature = - 8°C*
*Fluid outlet temperature = - 4°C.*

***Air:*** *Inlet dry temperature = + 2°C*
*Relative humidity = 85 %*
*Limitation of head loss at 10 m WC maximum.*

***Other conditions:***
*Possible optimization of exchanger circuiting according to the operating level.*
*System head loss taken into account, percentage of glycol,... (please contact us for details).*

***Connection kit available:***
- *1 kit for horizontal connection (please consult us).*
- *4 connection kits (please consult us).*
  - *steel weld-on sleeve*
  - *steel screw-on sleeve*
  - *steel weld-on sleeve*
  - *steel screw-on sleeve*

| CMU | CT5 | CT6 | CM5 | CM6 | M60 | BAE | BXT | WCO | E1K | E1U | ELU | HG1 | EEK | ECK | ECU | EGK | ECB | EIS |
|---|---|---|---|---|---|---|---|---|---|---|---|---|---|---|---|---|---|---|
| O | O | O | O | O | O | +👤 | O | +👤 | O | O | O | O | O | O | O | O | O | O |

## GT2I ... L 6/8P - 1,000/750 rpm. 6,35 mm

| Direct expansion | | GT2I ... L 6/8P | | 24 | 26 | 28 | 34 | 36 | 38 | 44 | 46 | 48 |
|---|---|---|---|---|---|---|---|---|---|---|---|---|
| Capacity R404A (1) | DT1 = 10 K - SC1 | 6P | kW | 42,6 | 52,8 | 58,7 | 64,0 | 76,7 | 86,9 | 85,4 | 104,6 | 117,7 |
| | | 8P | kW | 38,3 | 45,9 | 51,0 | 57,5 | 68,9 | 76,0 | 76,8 | 93,6 | 102,6 |
| | DT1 = 8 K - SC2 | 6P | kW | 24,1 | 30,8 | 35,6 | 36,2 | 45,6 | 52,9 | 48,3 | 61,8 | 71,4 |
| | | 8P | kW | 22,0 | 27,6 | 31,6 | 33,1 | 41,5 | 47,1 | 44,1 | 56,2 | 63,2 |
| Surface | | | $m^2$ | 89 | 134 | 179 | 134 | 201 | 268 | 179 | 268 | 357 |
| Circuit volume | | | $dm^3$ | 25 | 38 | 50 | 38 | 57 | 75 | 50 | 75 | 101 |
| Fan * | Air flow | 6P | $m^3/h$ | 23603 | 22199 | 20896 | 35405 | 33299 | 31344 | 47206 | 44398 | 41792 |
| | | 8P | $m^3/h$ | 19524 | 18296 | 17066 | 29286 | 27445 | 25599 | 39049 | 36593 | 34132 |
| | Air throw (2) | 6P | m | 2 x 18 | 2 x 16 | 2 x 15 | 2 x 18 | 2 x 16 | 2 x 15 | 2 x 18 | 2 x 16 | 2 x 15 |
| | | 8P | m | 2 x 15 | 2 x 13 | 2 x 12 | 2 x 15 | 2 x 13 | 2 x 12 | 2 x 15 | 2 x 13 | 2 x 12 |
| | Ø 630 mm | | Nb | 2 | 2 | 2 | 3 | 3 | 3 | 4 | 4 | 4 |
| Acoustic | Lp 4m (3) | 6P | dB(A) | 50 | 50 | 50 | 52 | 52 | 52 | 53 | 53 | 53 |
| | | 8P | dB(A) | 46 | 46 | 46 | 48 | 48 | 48 | 49 | 49 | 49 |
| Electric defrost E1U/E1K (4) | Ω | | Nb | 12 | 12 | 12 | 12 | 12 | 12 | 12 | 12 | 12 |
| | 400 V/3/50 Hz | | W Total | 9000 | 9000 | 9000 | 13800 | 13800 | 13800 | 18000 | 18000 | 18000 |
| | | | A Total | 13 | 13 | 13 | 20 | 20 | 20 | 26 | 26 | 26 |
| Electric defrost ELU/E1K+EEK (4) | Ω | | Nb | 12+6 | 12+6 | 12+6 | 12+6 | 12+6 | 12+6 | 12+6 | 12+6 | 12+6 |
| | 400 V/3/50 Hz | | W Total | 13500 | 13500 | 13500 | 20700 | 20700 | 20700 | 27000 | 27000 | 27000 |
| | | | A Total | 19,5 | 19,5 | 19,5 | 30 | 30 | 30 | 39 | 39 | 39 |
| ECK kit or EEK kit | Ω | | Nb | 6 | 6 | 6 | 6 | 6 | 6 | 6 | 6 | 6 |
| | 400 V/3/50 Hz | | W Total | 4500 | 4500 | 4500 | 6900 | 6900 | 6900 | 9000 | 9000 | 9000 |
| | | | A Total | 6,5 | 6,5 | 6,5 | 10 | 10 | 10 | 13 | 13 | 13 |
| | Nb max. kit | | ECK | 1 | 1 | 2 | 1 | 1 | 2 | 1 | 1 | 2 |
| | | | EEK | 1 | 1 | 1 | 1 | 1 | 1 | 1 | 1 | 1 |
| Connections R404A | Inlet | | Ø (6) | 1" 1/8 | 1" 3/8 | 1" 3/8 | 1" 3/8 | 1" 5/8 | 1" 5/8 | 1" 5/8 | 2x 1" 3/8 | 2x 1" 3/8 |
| | Outlet | | Ø (7) | 1" 5/8 | 1" 5/8 | 1" 5/8 | 2" 1/8 | 2" 1/8 | 2" 1/8 | 2" 1/8 | 2" 5/8 | 2" 5/8 |
| Net weight | | | kg | 260 | 292 | 316 | 349 | 395 | 433 | 457 | 506 | 549 |

** Ø 630 mm - 400 V/3/50 Hz. 6P : 980 W max - 2,3 A max (5). 8P : 720 W max - 1,3 A max (5).*

*(1) See page 10.*
*(2) Residual air speed: 0.25 m/s, in compliance with standard.*
*(3) Average sound pressure level in dB(A) measured at 4 m, at fan height, in direct line of sight on a reflective surface, given for information only.*
*(4) Optional electric defrost kit.*
*(5) Setting of overload protection levels.*
*(6) Distributor: Male to be brazed.*
*(7) ODF = Female to receive a tube of the same diameter.*

# Optimized coil for glycol water applications

## GT2I-W ... L 6/8P - 1,000/750 rpm. 6,35 mm

| Glycol water | | GT2I-W ... L 6/8P | | 24 | 26 | 28 | 34 | 36 | 38 | 44 | 46 | 48 |
|---|---|---|---|---|---|---|---|---|---|---|---|---|
| Capacity W* | DT1 = 8 K | 6P | kW | 26,8 | 38,5 | - | 42,7 | 50,3 | - | 52,6 | 77,2 | - |
| | | 8P | kW | 24,6 | 37,2 | - | 36,5 | 44,9 | - | 48,9 | 73,8 | - |
| Surface | | | $m^2$ | 112 | 168 | - | 168 | 252 | - | 224 | 336 | |

*** Glycol water** - *Capacity indicated for information only under the following conditions:*

***Fluid:*** *Percentage of glycol = 30 %*
*Fluid inlet temperature = - 8°C*
*Fluid outlet temperature = - 4°C.*

***Air:*** *Inlet dry temperature = + 2°C*
*Relative humidity = 85 %*
*Limitation of head loss at 10 m WC maximum.*

***Other conditions:***
*Possible optimization of exchanger circuiting according to the operating level.*
*System head loss taken into account, percentage of glycol,... (please contact us for details).*

***Connection kit available:***
- *1 kit for horizontal connection (please consult us).*
- *4 connection kits (please consult us).*
  - *steel weld-on sleeve*
  - *steel screw-on sleeve*
  - *steel weld-on sleeve*
  - *steel screw-on sleeve*

| CMU | CT5 | CT6 | CM5 | CM6 | M60 | BAE | BXT | WCO | E1K | E1U | ELU | HG1 | EEK | ECK | ECU | EGK | ECB | EIS |
|---|---|---|---|---|---|---|---|---|---|---|---|---|---|---|---|---|---|---|
| O | O | O | O | O | O | +👤 | O | +👤 | O | O | O | O | O | O | O | O | O | O |

## GT2I ... L 8/12P - 750/500 rpm. — 6,35 mm

| Direct expansion | | GT2I ... L 8/12P | | 24 | 26 | 28 | 34 | 36 | 38 | 44 | 46 | 48 |
|---|---|---|---|---|---|---|---|---|---|---|---|---|
| Capacity R404A (1) | DT1 = 10 K - SC1 | 8P | kW | 35,8 | 43,2 | 47,9 | 53,77 | 64,9 | 71,7 | 71,0 | 87,7 | 96,2 |
| | | 12P | kW | 32,6 | 38,8 | 40,2 | 48,3 | 58,1 | 62,7 | 65,4 | 78,4 | 80,8 |
| | DT1 = 8 K - SC2 | 8P | kW | 20,8 | 26,2 | 29,9 | 31,2 | 39,4 | 44,6 | 41,8 | 53,3 | 59,7 |
| | | 12P | kW | 19,4 | 23,8 | 25,3 | 28,8 | 35,8 | 39,7 | 29,2 | 48,0 | 50,6 |
| Surface | | | $m^2$ | 89 | 134 | 179 | 134 | 201 | 268 | 179 | 268 | 357 |
| Circuit volume | | | $dm^3$ | 25 | 38 | 50 | 38 | 57 | 75 | 50 | 75 | 101 |
| Fan * | Air flow | 8P | $m^3/h$ | 17241 | 16141 | 15183 | 25862 | 24212 | 22775 | 34483 | 32283 | 30366 |
| | | 12P | $m^3/h$ | 14708 | 13679 | 12756 | 22063 | 20519 | 19134 | 29417 | 27358 | 25512 |
| | Air throw (2) | 8P | m | 2 x 13 | 2 x 12 | 2 x 11 | 2 x 13 | 2 x 12 | 2 x 11 | 2 x 13 | 2 x 12 | 2 x 11 |
| | | 12P | m | 2 x 11 | 2 x 10 | 2 x 9 | 2 x 11 | 2 x 10 | 2 x 9 | 2 x 11 | 2 x 10 | 2 x 9 |
| | Ø 630 mm | | Nb | 2 | 2 | 2 | 3 | 3 | 3 | 4 | 4 | 4 |
| Acoustic | Lp 4m (3) | 8P | dB(A) | 43 | 43 | 43 | 45 | 45 | 45 | 46 | 46 | 46 |
| | | 12P | dB(A) | 38 | 38 | 38 | 40 | 40 | 40 | 41 | 41 | 41 |
| Electric defrost E1U/E1K (4) | Ω | | Nb | 12 | 12 | 12 | 12 | 12 | 12 | 12 | 12 | 12 |
| | 400 V/3/50 Hz | | W Total | 9000 | 9000 | 9000 | 13800 | 13800 | 13800 | 18000 | 18000 | 18000 |
| | | | A Total | 13 | 13 | 13 | 20 | 20 | 20 | 26 | 26 | 26 |
| Electric defrost ELU/E1K+EEK (4) | Ω | | Nb | 12+6 | 12+6 | 12+6 | 12+6 | 12+6 | 12+6 | 12+6 | 12+6 | 12+6 |
| | 400 V/3/50 Hz | | W Total | 13500 | 13500 | 13500 | 20700 | 20700 | 20700 | 27000 | 27000 | 27000 |
| | | | A Total | 19,5 | 19,5 | 19,5 | 30 | 30 | 30 | 39 | 39 | 39 |
| ECK kit or EEK kit | Ω | | Nb | 6 | 6 | 6 | 6 | 6 | 6 | 6 | 6 | 6 |
| | 400 V/3/50 Hz | | W Total | 4500 | 4500 | 4500 | 6900 | 6900 | 6900 | 9000 | 9000 | 9000 |
| | | | A Total | 6,5 | 6,5 | 6,5 | 10 | 10 | 10 | 13 | 13 | 13 |
| | Nb max. kit | | ECK | 1 | 1 | 2 | 1 | 1 | 2 | 1 | 1 | 2 |
| | | | EEK | 1 | 1 | 1 | 1 | 1 | 1 | 1 | 1 | 1 |
| Connections R404A | Inlet | | Ø (6) | 1" 1/8 | 1" 1/8 | 1" 3/8 | 1" 3/8 | 1" 3/8 | 1" 5/8 | 1" 5/8 | 1" 5/8 | 2x 1" 3/8 |
| | Outlet | | Ø (7) | 1" 3/8 | 1" 3/8 | 1" 3/8 | 1" 5/8 | 1" 5/8 | 2" 1/8 | 2" 1/8 | 2" 1/8 | 2" 5/8 |
| Net weight | | | kg | 260 | 292 | 316 | 349 | 395 | 433 | 457 | 506 | 549 |

** Ø 630 mm - 400 V/3/50 Hz. 8P : 500 W max - 1,5 A max (5). 12P : 350 W max - 0,8 A max (5).*

*(1) See page 10.*
*(2) Residual air speed: 0.25 m/s, in compliance with standard.*
*(3) Average sound pressure level in dB(A) measured at 4 m, at fan height, in direct line of sight on a reflective surface, given for information only.*
*(4) Optional electric defrost kit.*
*(5) Setting of overload protection levels.*
*(6) Distributor: Male to be brazed.*
*(7) ODF = Female to receive a tube of the same diameter.*

# Optimized coil for glycol water applications

## GT2I-W ... L 8/12P - 750/500 rpm. — 6,35 mm

| Glycol water | | GT2I-W ... L 8/12P | | 24 | 26 | 28 | 34 | 36 | 38 | 44 | 46 | 48 |
|---|---|---|---|---|---|---|---|---|---|---|---|---|
| Capacity W* | DT1 = 8 K | 8P | kW | 22,8 | 33,1 | - | 38,4 | 43,2 | - | 45,2 | 65,6 | - |
| | | 12P | kW | 21,1 | 27,7 | - | 36,5 | 41,5 | - | 38,5 | 53,9 | - |
| Surface | | | $m^2$ | 112 | 168 | - | 168 | 252 | - | 224 | 336 | - |

*** Glycol water** - *Capacity indicated for information only under the following conditions:*

***Fluid:*** *Percentage of glycol = 30 %*
*Fluid inlet temperature = - 8°C*
*Fluid outlet temperature = - 4°C.*

***Air:*** *Inlet dry temperature = + 2°C*
*Relative humidity = 85 %*
*Limitation of head loss at 10 m WC maximum.*

***Other conditions:***
*Possible optimization of exchanger circuiting according to the operating level.*
*System head loss taken into account, percentage of glycol,... (please contact us for details).*

***Connection kit available:***
- *1 kit for horizontal connection (please consult us).*
- *4 connection kits (please consult us).*
  - *steel weld-on sleeve*
  - *steel screw-on sleeve*
  - *steel weld-on sleeve*
  - *steel screw-on sleeve*

| CMU | CT5 | CT6 | CM5 | CM6 | M60 | BAE | BXT | WCO | E1K | E1U | ELU | HG1 | EEK | ECK | ECU | EGK | ECB | EIS |
|---|---|---|---|---|---|---|---|---|---|---|---|---|---|---|---|---|---|---|
| O | O | O | O | O | O | +👤 | O | +👤 | O | O | O | O | O | O | O | O | O | O |

HEATCRAFT™
Worldwide Refrigeration

EUROVENT CERTIFIED PERFORMANCE
www.eurovent-certification.com

E Solutions
Efficiency • Environment

# Cubic unit cooler

## NK industrial range

- The NK range is designed for industrial refrigeration, conservation or deep-freezing applications.
- **NK version T** (large heat-exchange surface):
  - Adapted to humidity-sensitive products.
  - Reduced number of daily defrost cycles offering a reduction in electrical power consumption.
- **NK version H** (high efficiency):
  - Adapted to the storage of packed products.
- Economical choice, wide range of options for specific industrial applications (pressure sleeve, defrost…) 4 fin spacing distances: 4, 6, 9, 12 mm.
- 2 fan diameters for air throw adapted to the application.
- Two-speed fans as standard.

*Natural fluids:*
*Glycol water*
*$CO_2$ (R744)**

** Low temperature applications*

8 ▁▂▃▄▅ 130 kW

Heatcraft reserves itself the right to make changes at any time without preliminary notice - Photos non-contractual

FRIGA-BOHN

HYFRA® PEDIA

HK® REFRIGERATION

## Market segments

*FCS Refrigerated storage and transit stocking – Food processing – Dispatch centres*

## Description

### Casing

- The casing is made of pre-painted, galvanized steel offering a high resistance to corrosion and impact damage.
- An internal aluminium drain pan limits the effects of condensation under the main drain pan during the defrost process.
- The NK unit coolers are delivered in mounting position in reinforced crates (ECB option).

### Ventilation

- The external rotor fans are equipped with fan guards compliant with safety standards.
- 2 fan types are used for the NK range:
  Ø 630 mm 4/6 pole (1,500/1,000 rpm) - Ø 800 mm 6/8 pole (1,000/750 rpm).
- The motors are of the three-phase type, 400 V, 50 Hz, IP54, class F.
- Selection of a unit cooler with various fan number/diameter combinations offering the dimensional and air throw characteristics best adapted to the size of the cold room.

### Coil

- The finned coils of the NK range are designed with aluminium fins spaced at 4, 6, 9 or 12 mm, crimped onto copper tubes.
- Two types of fins are available depending on the application:
  - High-efficiency H type fins for an economical solution.
  This type of fin is particularly suitable for the storage of packed products.
  The reduced size of the heat-exchanger also enables fast defrosting.
  - T type fins with a large heat-exchanger surface. This type of fin limits dehydration of products. It also saves energy by reducing the number of defrost cycles per day;
- The coils are supplied via optimized R404A diaphragm distributor(s).
- For all other refrigerants, please contact us and specify when ordering.

### Defrost

**NKH ... C, NKH ... S, NKT ... C, NKT ... S, and NKT ... T**

- The shielded electric heating elements are inserted in sleeves located in the finned coil, 2 or 3 heating elements are placed under the intermediate drain pan.
- This facility enables homogenous heat distribution for fast and efficient defrosting.
- The heaters are factory connected to a 400V/3 power supply on a terminal block in a junction box.
- Total gas defrost (HGT) or partial (HG1) available as optional extra.

**NKH ... R, NKH ... L, and NKT ... L**

- Light electric defrost (E1U) and "low temperature" electric defrost (ELU) models available as optional extra.
- The light electric defrost (E1K) is also available in kit form.
- A water defrost (DAE) option is available for room temperature equal to or greater than +4° C.
  In this case the unit cooler depth is increased by 40 mm.
- Maximum water flow-rate with NK:
  1 fan = 5 m3/h. - 2 fans = 10 m3/h.
  3 fans = 15 m3/h. - 4 fans = 20 m3/h.

## Certifications

## Designation

**NKH**(1) **3x6**(2)**D**(3) **B2**(4) **R**(5)

(1) Fin type:
**T** = Large exchange surface - **H** = High-efficiency fin
(2) Number of fans x Ø: **6** = Ø 630 mm - **8** = Ø 800 mm
(3) Motor connection: **D** = Delta - **Y** = Star
(4) Module
(5) Fin spacing: **R** = 4 mm - **L/C** = 6 mm - **S** = 9 mm - **T** = 12 mm

## Advantages

### Installation

Electrical and refrigerant connections easily accessible for simple installation.

The height-adjustable leg supports enable floor mounting of the unit (KMS option).

### Servicing / Maintenance

The galvanized steel side panels and drain pan are hinge-mounted: easy intervention, maintenance and cleaning.

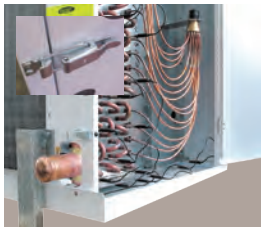

External installation of fans offering easy access for possible interventions.

## Options

| Kit | Factory | |
|---|---|---|
| | | **Ventilation** |
| | M60 | Electric fans 230-400V/3/60Hz. |
| | CMU | Motors factory wired. |
| | C2V | Motors wired for 2 speeds. |
| VPA | | Air pressure shell also allowing the connection of a textile duct. |
| VPM | | Flexible defrost sleeve + air pressure shell. |
| | | **Coil** |
| | BAE | Paint coil protection. |
| | BXT | Blygold Polual XT coil protection. |
| | WCO | Glycol water, coolant (please contact us for details). |
| EGU | | Glycol water extension (please contact us for details). |
| | CO2 | R744 optimization (please contact us for details). |
| | | **Defrost** |
| E1K | E1U | Light electric defrost. |
| ECK | ECU | Additional coil electric defrost. |
| | ELU | Electric defrost (coil + drain pan). |
| | HG1 | Hot gas defrost (coil: hot gas, drain pan: electric heaters). |
| | HGT | Hot gas (coil and drain pan). |
| RVK | RVU | Shell defrost heaters. |
| | DAE | Water defrost. |
| | | **Miscellaneous** |
| | ECB | Full crate packaging. |
| | EIS | Insulated drain pan. |
| KMS | | Floor-mounting legs. |

## Application of options

### C2V option (2-speed wiring)

**Adapted ventilation and noise level:**
**High speed** during the charging phase requiring high capacity.
**Low speed** during the long storage period or in case of presence of employees for reduced noise level.

### VPA option

**Homogenous distribution of air flow:**
Increased air throw, optimized air flow and efficient distribution of air in the cold room.

**Application requiring installation of a textile duct:**
Shell for textile duct with air stream deflectors (ducts not provided).

### VPM option

**Defrost for low-temperature applications :**
Avoid circulation of hot air during defrost cycles.
Reduction of defrost cycle time for energy saving.

## Pre-selection

| | Chill applications | Low-temperature applications | |
|---|---|---|---|
| Fin spacing | **SC2**<br>**tA1 = 0 °C**<br>**Δt 8 K** | **SC3**<br>**tA1 = -18 °C**<br>**Δt 7 K** | **SC4**<br>**tA1 = -25 °C**<br>**Δt 6 K** |
| **NKT** | | | |
| **6 mm** | NKT .. L* | NKT .. C | NKT .. C |
| **9 mm** | - | NKT .. S | NKT .. S |
| **12 mm** | - | NKT .. T | NKT .. T |
| Defrost | E1U* / ELU* | Integrated | Integrated |

| Fin spacing | **SC2**<br>**tA1 = 0 °C**<br>**Δt 8 K** | **SC3**<br>**tA1 = -18 °C**<br>**Δt 7 K** | **SC4**<br>**tA1 = -25 °C**<br>**Δt 6 K** |
|---|---|---|---|
| **NKH** | | | |
| **4 mm** | NKH .. R* | - | - |
| **6 mm** | NKH .. L* | NKH .. C | NKH .. C |
| **9 mm** | - | NKH .. S | NKH .. S |
| Defrost | E1U* / ELU* | Integrated | Integrated |

**Add defrosting:*
**E1U** *for a room temperature between +4 °C and +2 °C,*
**ELU** *for a room temperature between +2 °C and -5 °C.*

## Average correction factors for connection in Y instead of D on standard motors*

| NKT | Fin spacing 6 mm | | | Fin spacing 9 mm | | | Fin spacing 12 mm | | |
|---|---|---|---|---|---|---|---|---|---|
| | Air flow | Capa city | Air throw | Air flow | Capa city | Air throw | Air flow | Capa city | Air throw |
| **B2** | 0,76 | 0,87 | 0,76 | 0,76 | 0,88 | 0,76 | 0,76 | 0,89 | 0,76 |
| **B3** | 0,76 | 0,86 | 0,76 | 0,76 | 0,88 | 0,76 | 0,77 | 0,88 | 0,77 |
| **B4** | 0,76 | 0,85 | 0,76 | 0,76 | 0,86 | 0,76 | 0,76 | 0,87 | 0,76 |
| **C2** | 0,72 | 0,85 | 0,72 | 0,73 | 0,86 | 0,73 | 0,73 | 0,86 | 0,73 |
| **C3** | 0,72 | 0,83 | 0,72 | 0,73 | 0,85 | 0,73 | 0,73 | 0,85 | 0,73 |

| NKH | Fin spacing 4 mm | | | Fin spacing 6 mm | | | Fin spacing 9 mm | | |
|---|---|---|---|---|---|---|---|---|---|
| | Air flow | Capa city | Air throw | Air flow | Capa city | Air throw | Air flow | Capa city | Air throw |
| **B1** | 0,76 | 0,87 | 0,76 | 0,76 | 0,87 | 0,76 | 0,76 | 0,89 | 0,76 |
| **B2** | 0,76 | 0,86 | 0,76 | 0,76 | 0,85 | 0,76 | 0,76 | 0,87 | 0,76 |
| **B3** | 0,76 | 0,85 | 0,76 | 0,76 | 0,84 | 0,76 | 0,76 | 0,86 | 0,76 |
| **C1** | 0,73 | 0,85 | 0,73 | 0,74 | 0,84 | 0,74 | 0,74 | 0,86 | 0,74 |
| **C2** | 0,72 | 0,82 | 0,72 | 0,72 | 0,82 | 0,72 | 0,73 | 0,85 | 0,73 |

** If the unit cooler is used permanently with motors connected in Y, please specify this fact to allow optimization of circuits and distribution.*

## Sound power level Lw

| Nb | 1 fan | | 2 fans | | 3 fans | | 4 fans | |
|---|---|---|---|---|---|---|---|---|
| | D | Y | D | Y | D | Y | D | Y |
| **Ø 630 mm** | | | | | | | | |
| **dB(A)** | 90 | 82 | 93 | 85 | 95 | 87 | 96 | 88 |
| **Ø 800 mm** | | | | | | | | |
| **dB(A)** | 84 | 77 | 87 | 80 | 89 | 82 | 90 | 83 |

*Motor connection:* **D :** *Delta* - **Y :** *Star*

## Ø 630 mm

NK ... 1x6 ...

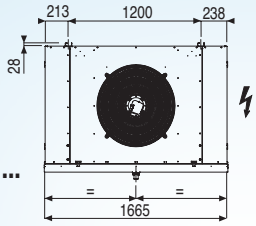


NK ... 2x6 ...

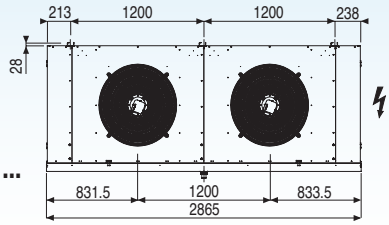


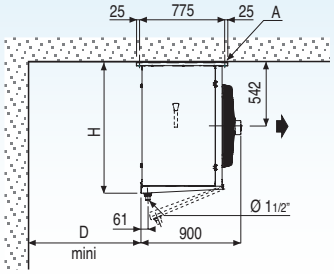


NK ... 3x6 ...

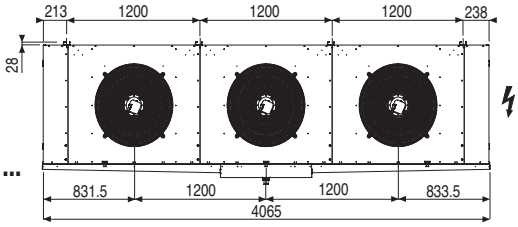


| Vent. | D | H |
|---|---|---|
| 1 | 550 | 1115 |
| 2 | 700 | 1115 |
| 3 | 800 | 1158 |
| 4 | 850 | 1158 |

NK ... 4x6 ...

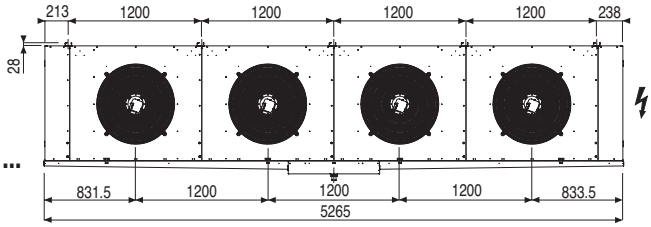


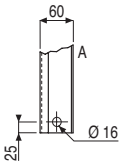


## Ø 800 mm

NK ... 1x8 ...

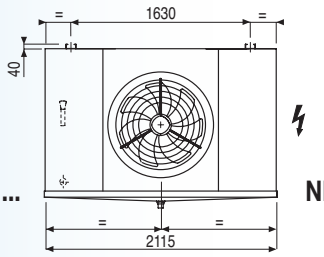


NK ... 2x8 ...

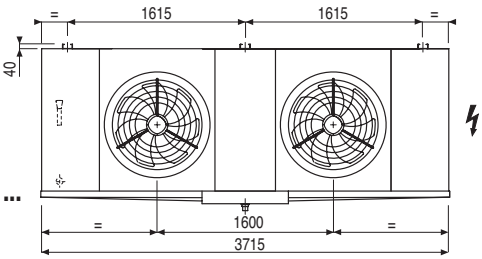


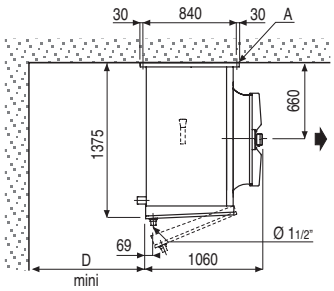


NK ... 3x8 ...

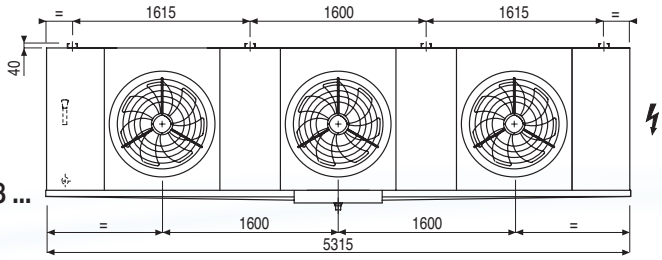


| Vent. | D |
|---|---|
| 1 | 700 |
| 2 | 900 |
| 3 | 1000 |
| 4 | 1050 |

NK ... 4x8 ...

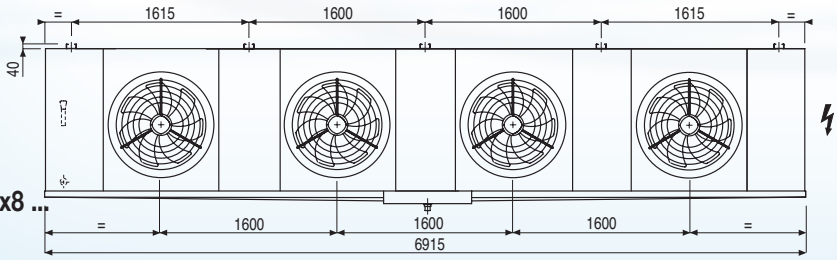


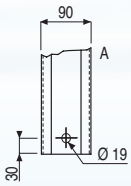

## NKH ... R H = High-efficiency fin

4 mm

| | | NKH ... R | 1x6D B1 | 1x6D B2 | 1x6D B3 | 1x8D C1 | 2x6Y B1 | 1x8D C2 | 2x6D B1 | 2x6D B2 | 2x6D B3 | 3x6D B1 | 2x8D C1 |
|---|---|---|---|---|---|---|---|---|---|---|---|---|---|
| Capacity R404A (1) | DT1 = 8K - SC2 | kW (6) | **19.52** | **24.45** | **26.40** | **30.41** | **34.05** | **36.90** | **39.47** | **47.67** | **53.50** | **59.47** | **61.34** |
| Surface | | $m^2$ | 78.0 | 117.0 | 156.0 | 130.0 | 156.0 | 195.0 | 156.0 | 234.0 | 312.0 | 234.0 | 260.0 |
| Circuit volume | | $dm^3$ | 14.4 | 21.6 | 28.7 | 23.9 | 28.7 | 35.9 | 28.7 | 43.1 | 57.5 | 43.1 | 47.9 |
| Fan * | Nb x Ø | mm | 1 x 630 | 1 x 630 | 1 x 630 | 1 x 800 | 2 x 630 | 1 x 800 | 2 x 630 | 2 x 630 | 2 x 630 | 3 x 630 | 2 x 800 |
| Air flow | | $m^3/h$ (6) | 13650 | 12600 | 11650 | 19500 | 20800 | 17850 | 27300 | 25200 | 23300 | 40950 | 39000 |
| Air throw (2) | standard | m (6) | 43 | 40 | 38 | 43 | 36 | 40 | 44 | 42 | 39 | 50 | 44 |
| | with **VPA** option | m (6) | 58 | 55 | 53 | 58 | 51 | 55 | 59 | 57 | 54 | 65 | 59 |
| Acoustic | Lp 4m | dB(A) (7) | 59 | 59 | 59 | 53 | 54 | 53 | 62 | 62 | 62 | 64 | 56 |
| Electric defrost **E1U** (3) | Ω | Nb | 6 | 6 | 9 | 6 | 6 | 6 | 6 | 6 | 9 | 6 | 6 |
| | 400 V/3/50 Hz | W | 6900 | 6900 | 10350 | 9000 | 13200 | 9000 | 13200 | 13200 | 19800 | 19500 | 17400 |
| | | A | 10.0 | 10.0 | 14.9 | 13.0 | 19.1 | 13.0 | 19.1 | 19.1 | 28.6 | 28.1 | 25.1 |
| Electric defrost **ELU** (3) | Ω | Nb | 6 | 9 | 12 | 6 | 6 | 9 | 6 | 9 | 12 | 6 | 6 |
| | 400 V/3/50 Hz | W | 6900 | 10350 | 13800 | 9000 | 13200 | 13500 | 13200 | 19800 | 26400 | 19500 | 17400 |
| | | A | 10.0 | 14.9 | 19.9 | 13.0 | 19.1 | 19.5 | 19.1 | 28.6 | 38.1 | 28.1 | 25.1 |
| Electric defrost kit Kit **ECK** (4) | Ω | Nb | - | 3 | 3 | - | - | 3 | - | 3 | 3 | - | - |
| | 400 V/3/50 Hz | W | - | 3450 | 3450 | - | - | 4500 | - | 6600 | 6600 | - | - |
| | | A | - | 5.0 | 5.0 | - | - | 6.5 | - | 9.5 | 9.5 | - | - |
| Kit **ECK** | | Nb | 0 | 1 | 1 | 0 | 0 | 1 | 0 | 1 | 1 | 0 | 0 |
| Connections | Inlet | Ø | 7/8" | 1 1/8" | 1 1/8" | 1 3/8" | 1 3/8" | 1 3/8" | 1 3/8" | 1 3/8" | 1 5/8" | 1 5/8" | 1 5/8" |
| | Outlet | Ø | 1 5/8" | 1 5/8" | 1 5/8" | 2 1/8" | 2 1/8" | 2 1/8" | 2 1/8" | 2 1/8" | 2 1/8" | 2 1/8" | 2 5/8" |
| Net weight | | kg | 160 | 180 | 200 | 240 | 270 | 270 | 270 | 300 | 340 | 370 | 420 |

| | | NKH ... R | 4x6Y B1 | 2x8D C2 | 3x6D B2 | 3x6D B3 | 4x6D B1 | 3x8D C1 | 4x6D B2 | 4x6D B3 | 3x8D C2 | 4x8D C1 | 4x8D C2 |
|---|---|---|---|---|---|---|---|---|---|---|---|---|---|
| Capacity R404A (1) | DT1 = 8K - SC2 | kW (6) | **65.82** | **72.64** | **74.37** | **78.64** | **79.71** | **81.55** | **95.24** | **106.83** | **107.46** | **123.04** | **127.18** |
| Surface | | $m^2$ | 312.0 | 390.0 | 351.0 | 468.1 | 312.0 | 390.0 | 468.0 | 623.9 | 584.9 | 519.9 | 779.9 |
| Circuit volume | | $dm^3$ | 55.7 | 71.8 | 64.6 | 86.2 | 55.7 | 69.6 | 83.5 | 111.3 | 104.3 | 92.8 | 139.1 |
| Fan * | Nb x Ø | mm | 4 x 630 | 2 x 800 | 3 x 630 | 3 x 630 | 4 x 630 | 3 x 800 | 4 x 630 | 4 x 630 | 3 x 800 | 4 x 800 | 4 x 800 |
| Air flow | | $m^3/h$ (6) | 41600 | 35700 | 37800 | 34950 | 54600 | 58500 | 50400 | 46600 | 53550 | 78000 | 71400 |
| Air throw (2) | standard | m (6) | 44 | 41 | 47 | 44 | 55 | 50 | 52 | 49 | 47 | 56 | 52 |
| | with **VPA** option | m (6) | 59 | 56 | 62 | 59 | 70 | 65 | 67 | 64 | 62 | 71 | 67 |
| Acoustic | Lp 4m | dB(A) (7) | 57 | 56 | 64 | 64 | 65 | 58 | 65 | 65 | 58 | 59 | 59 |
| Electric defrost **E1U** (3) | Ω | Nb | 6 | 6 | 6 | 9 | 6 | 6 | 6 | 9 | 6 | 6 | 6 |
| | 400 V/3/50 Hz | W | 25800 | 17400 | 19500 | 29250 | 25800 | 25800 | 25800 | 38700 | 25800 | 34200 | 34200 |
| | | A | 37.2 | 25.1 | 28.1 | 42.2 | 37.2 | 37.2 | 37.2 | 55.9 | 37.2 | 49.4 | 49.4 |
| Electric defrost **ELU** (3) | Ω | Nb | 6 | 9 | 9 | 12 | 6 | 6 | 9 | 12 | 9 | 6 | 9 |
| | 400 V/3/50 Hz | W | 25800 | 26100 | 29250 | 39000 | 25800 | 25800 | 38700 | 51600 | 38700 | 34200 | 51300 |
| | | A | 37.2 | 37.7 | 42.2 | 56.3 | 37.2 | 37.2 | 55.9 | 74.5 | 55.9 | 49.4 | 74.0 |
| Electric defrost kit Kit **ECK** (4) | Ω | Nb | - | 3 | 3 | 3 | - | - | 3 | 3 | 3 | - | 3 |
| | 400 V/3/50 Hz | W | - | 8700 | 9750 | 9750 | - | - | 12900 | 12900 | 12900 | - | 17100 |
| | | A | - | 12.6 | 14.1 | 14.1 | - | - | 18.6 | 18.6 | 18.6 | - | 24.7 |
| Kit **ECK** | | Nb | 0 | 1 | 1 | 1 | 0 | 0 | 1 | 1 | 1 | 0 | 1 |
| Connections | Inlet | Ø | 1 5/8" | 1 5/8" | 2x 1 3/8" | 1 5/8" | 2x 1 5/8" | 1 5/8" | 2x 1 3/8" | 2x 1 5/8" | 2x 1 5/8" | 2x 1 5/8" | 2x 1 5/8" |
| | Outlet | Ø | 2 5/8" | 2 5/8" | 2x 2 1/8" | 2 5/8" | 2x 2 1/8" | 2 5/8" | 2x 2 1/8" | 2x 2 1/8" | 2x 2 1/8" | 2x 2 5/8" | 2x 2 5/8" |
| Net weight | | kg | 480 | 480 | 430 | 490 | 480 | 570 | 550 | 630 | 670 | 740 | 840 |

** Ø 630 mm : 400 V/3/50 Hz : Δ = 1900 W max - 3,20 A max - Y = 1200 W max - 1,95 A max (5)*
** Ø 800 mm : 400 V/3/50 Hz : Δ = 2000 W max - 4,00 A max - Y = 1250 W max - 2,30 A max (5)*

*(1) See page 10.*
*(2) Residual air speed: 0.25 m/s, in compliance with standard.*
*(3) Electric defrost options.*
*(4) Electric defrost kit.*
*(5) Setting of overload protection levels. For air temperatures "ti" other than +20 °C, multiply the currents in relation to 293/(273 + "ti") in order to obtain an approximate current value after the room temperature is attained.*
*(6) For motor connection in star (Y) instead of delta (D), refer to the correction factors.*
*(7) Average sound pressure level in dB(A) measured at 4 m, at fan height, in direct line of sight on a reflective surface, given for information only.*

| M60 | CMU | C2V | VGT | VPM | BAE | BXT | WCO | EGU | CO2 | E1K | E1U | ECK* | ECU* | ELU | HG1 | HGT | RVK | RVU | DAE | ECB | EIS | KMS |
|---|---|---|---|---|---|---|---|---|---|---|---|---|---|---|---|---|---|---|---|---|---|---|
| O | O | O | O | O | O | O | +👤 | +👤 | - | O | O | O | O | O | O | O | O | O | O | O | O | O |

** Except NKH 1x6D B1 R - NKH 1x8D C1 R - NKH 2x6Y B1 R - NKH 2x6D B1 R - NKH 3x6D B1 R - NKH 2x8D C1 R - NKH 4x6Y B1 R - NKH 4x6D B1 R - NKH 3x8D C1 R - NKH 4x8D C1 R*

## NKT ... L T = Large heat exchange surface 6 mm

| | | NKT ... L | 1x6D B2 | 1x6D B3 | 1x6D B4 | 1x8D C2 | 2x6Y B2 | 1x8D C3 | 2x6D B2 | 2x6D B3 | 2x6D B4 | 3x6D B2 | 2x8D C2 |
|---|---|---|---|---|---|---|---|---|---|---|---|---|---|
| Capacity R404A (1) | DT1 = 8K - SC2 | kW (6) | **17.91** | **21.46** | **23.93** | **27.06** | **31.58** | **32.06** | **35.92** | **43.44** | **48.48** | **54.21** | **55.13** |
| Surface | | $m^2$ | 101.2 | 135.0 | 168.7 | 162.0 | 202.5 | 216.0 | 202.5 | 270.0 | 337.4 | 303.7 | 323.9 |
| Circuit volume | | $dm^3$ | 27.4 | 36.5 | 45.6 | 43.8 | 54.8 | 58.4 | 54.8 | 73.0 | 91.3 | 82.2 | 87.6 |
| Fan * | Nb x Ø | mm | 1 x 630 | 1 x 630 | 1 x 630 | 1 x 800 | 2 x 630 | 1 x 800 | 2 x 630 | 2 x 630 | 2 x 630 | 3 x 630 | 2 x 800 |
| Air flow | | $m^3/h$ (6) | 14350 | 13850 | 13200 | 20450 | 21800 | 19300 | 28700 | 27700 | 26400 | 43050 | 40900 |
| Air throw (2) | standard | m (6) | 45 | 43 | 42 | 45 | 35 | 43 | 46 | 45 | 43 | 52 | 46 |
| | with **VPA** option | m (6) | 60 | 58 | 57 | 60 | 50 | 58 | 61 | 60 | 58 | 67 | 61 |
| Acoustic | Lp 4m | dB(A) (7) | 59 | 59 | 59 | 53 | 54 | 53 | 62 | 62 | 62 | 64 | 56 |
| Electric defrost **E1U** (3) | Ω | Nb | 6 | 9 | 12 | 6 | 6 | 9 | 6 | 9 | 12 | 6 | 6 |
| | 400 V/3/50 Hz | W | 6900 | 10350 | 13800 | 9000 | 13200 | 13500 | 13200 | 19800 | 26400 | 19500 | 17400 |
| | | A | 10.0 | 14.9 | 19.9 | 13.0 | 19.1 | 19.5 | 19.1 | 28.6 | 38.1 | 28.1 | 25.1 |
| Electric defrost **ELU** (3) | Ω | Nb | 9 | 12 | 15 | 9 | 9 | 12 | 9 | 12 | 15 | 9 | 9 |
| | 400 V/3/50 Hz | W | 10350 | 13800 | 17250 | 13500 | 19800 | 18000 | 19800 | 26400 | 33000 | 29250 | 26100 |
| | | A | 14.9 | 19.9 | 24.9 | 19.5 | 28.6 | 26.0 | 28.6 | 38.1 | 47.6 | 42.2 | 37.7 |
| Electric defrost kit Kit **ECK** (4) | Ω | Nb | 3 | 3 | 3 | 3 | 3 | 3 | 3 | 3 | 3 | 3 | 3 |
| | 400 V/3/50 Hz | W | 3450 | 3450 | 3450 | 4500 | 6600 | 4500 | 6600 | 6600 | 6600 | 9750 | 8700 |
| | | A | 5.0 | 5.0 | 5.0 | 6.5 | 9.5 | 6.5 | 9.5 | 9.5 | 9.5 | 14.1 | 12.6 |
| Kit **ECK** | | Nb | 1 | 1 | 1 | 1 | 1 | 1 | 1 | 1 | 1 | 1 | 1 |
| Connections | Inlet | Ø | 5/8" | 7/8" | 1 1/8" | 7/8" | 1 1/8" | 1 1/8" | 1 1/8" | 1 3/8" | 1 5/8" | 1 3/8" | 1 3/8" |
| | Outlet | Ø | 1 3/8" | 1 5/8" | 1 5/8" | 1 5/8" | 2 1/8" | 2 1/8" | 2 1/8" | 2 1/8" | 2 1/8" | 2 1/8" | 2 1/8" |
| Net weight | | kg | 180 | 200 | 220 | 270 | 310 | 300 | 310 | 350 | 390 | 440 | 480 |

| | | NKT ... L | 2x8D C3 | 3x6D B3 | 3x6D B4 | 4x6D B2 | 3x8D C2 | 4x6D B3 | 4x6D B4 | 3x8D C3 | 4x8D C2 | 4x8D C3 |
|---|---|---|---|---|---|---|---|---|---|---|---|---|
| Capacity R404A (1) | DT1 = 8K - SC2 | kW (6) | **64.69** | **65.02** | **71.04** | **72.40** | **82.43** | **85.65** | **94.89** | **96.98** | **109.95** | **129.20** |
| Surface | | $m^2$ | 431.9 | 404.9 | 506.2 | 404.9 | 485.9 | 539.9 | 674.9 | 647.9 | 647.9 | 863.8 |
| Circuit volume | | $dm^3$ | 116.8 | 109.5 | 136.9 | 109.5 | 131.4 | 146.0 | 182.6 | 175.3 | 175.2 | 233.7 |
| Fan * | Nb x Ø | mm | 2 x 800 | 3 x 630 | 3 x 630 | 4 x 630 | 3 x 800 | 4 x 630 | 4 x 630 | 3 x 800 | 4 x 800 | 4 x 800 |
| Air flow | | $m^3/h$ (6) | 38600 | 41550 | 39600 | 57400 | 61350 | 55400 | 52800 | 57900 | 81800 | 77200 |
| Air throw (2) | standard | m (6) | 44 | 51 | 49 | 58 | 53 | 56 | 54 | 50 | 59 | 56 |
| | with **VPA** option | m (6) | 59 | 66 | 64 | 73 | 68 | 71 | 69 | 65 | 74 | 71 |
| Acoustic | Lp 4m | dB(A) (7) | 56 | 64 | 64 | 65 | 58 | 65 | 65 | 58 | 59 | 59 |
| Electric defrost **E1U** (3) | Ω | Nb | 9 | 9 | 12 | 6 | 6 | 9 | 12 | 9 | 6 | 9 |
| | 400 V/3/50 Hz | W | 26100 | 29250 | 39000 | 25800 | 25800 | 38700 | 51600 | 38700 | 34200 | 51300 |
| | | A | 37.7 | 42.2 | 56.3 | 37.2 | 37.2 | 55.9 | 74.5 | 55.9 | 49.4 | 74.0 |
| Electric defrost **ELU** (3) | Ω | Nb | 12 | 12 | 15 | 9 | 9 | 12 | 15 | 12 | 9 | 12 |
| | 400 V/3/50 Hz | W | 34800 | 39000 | 48750 | 38700 | 38700 | 51600 | 64500 | 51600 | 51300 | 68400 |
| | | A | 50.2 | 56.3 | 70.4 | 55.9 | 55.9 | 74.5 | 93.1 | 74.5 | 74.0 | 98.7 |
| Electric defrost kit Kit **ECK** (4) | Ω | Nb | 3 | 3 | 3 | 3 | 3 | 3 | 3 | 3 | 3 | 3 |
| | 400 V/3/50 Hz | W | 8700 | 9750 | 9750 | 12900 | 12900 | 12900 | 12900 | 12900 | 17100 | 17100 |
| | | A | 12.6 | 14.1 | 14.1 | 18.6 | 18.6 | 18.6 | 18.6 | 18.6 | 24.7 | 24.7 |
| Kit **ECK** | | Nb | 1 | 1 | 1 | 1 | 1 | 1 | 1 | 1 | 1 | 1 |
| Connections | Inlet | Ø | 1 5/8" | 1 5/8" | 1 5/8" | 1 5/8" | 1 5/8" | 1 5/8" | 1 5/8" | 1 5/8" | 2x 1 3/8" | 2x 1 5/8" |
| | Outlet | Ø | 2 5/8" | 2 5/8" | 2 5/8" | 2 5/8" | 2 5/8" | 2 5/8" | 2 5/8" | 2 5/8" | 2x 2 1/8" | 2x 2 5/8" |
| Net weight | | kg | 540 | 500 | 550 | 560 | 680 | 640 | 720 | 770 | 870 | 990 |

** Ø 630 mm : 400 V/3/50 Hz : Δ = 1900 W max - 3,20 A max - Y = 1200 W max - 1,95 A max (5)*
** Ø 800 mm : 400 V/3/50 Hz : Δ = 2000 W max - 4,00 A max - Y = 1250 W max - 2,30 A max (5)*

*(1) See page 10.*
*(2) Residual air speed: 0.25 m/s, in compliance with standard.*
*(3) Electric defrost options.*
*(4) Electric defrost kit.*
*(5) Setting of overload protection levels. For air temperatures "ti" other than +20 °C, multiply the currents in relation to 293/(273 + "ti") in order to obtain an approximate current value after the room temperature is attained.*
*(6) For motor connection in star (Y) instead of delta (D), refer to the correction factors.*
*(7) Average sound pressure level in dB(A) measured at 4 m, at fan height, in direct line of sight on a reflective surface, given for information only.*

| M60 | CMU | C2V | VGT | VPM | BAE | BXT | WCO | EGU | CO2 | E1K | E1U | ECK* | ECU* | ELU | HG1 | HGT | RVK | RVU | DAE | ECB | EIS | KMS |
|---|---|---|---|---|---|---|---|---|---|---|---|---|---|---|---|---|---|---|---|---|---|---|
| O | O | O | O | O | O | O | +👤 | +👤 | - | O | O | O | O | O | O | O | O | O | O | O | O | O |

** Except NKT 2x4D A2 L - NKT 3x4D A2 L*

## NKH ... L H = High-efficiency fin

6 mm

| | | NKH ... L | 1x6D B1 | 1x6D B2 | 1x6D B3 | 1x8D C1 | 2x6Y B1 | 1x8D C2 | 2x6D B1 | 2x6D B2 | 2x6D B3 | 3x6D B1 | 2x8D C1 |
|---|---|---|---|---|---|---|---|---|---|---|---|---|---|
| Capacity R404A (1) | DT1 = 8K - SC2 | kW (6) | **17.37** | **22.51** | **25.41** | **27.26** | **30.79** | **34.39** | **35.26** | **44.19** | **50.99** | **53.03** | **54.64** |
| Surface | | $m^2$ | 53.7 | 80.4 | 107.4 | 89.5 | 107.2 | 134.3 | 107.2 | 161.1 | 214.4 | 160.8 | 179.0 |
| Circuit volume | | $dm^3$ | 14.4 | 21.6 | 28.7 | 23.9 | 28.7 | 35.9 | 28.7 | 43.1 | 57.5 | 43.1 | 47.9 |
| Fan * | Nb x Ø | mm | 1 x 630 | 1 x 630 | 1 x 630 | 1 x 800 | 2 x 630 | 1 x 800 | 2 x 630 | 2 x 630 | 2 x 630 | 3 x 630 | 2 x 800 |
| Air flow | | $m^3/h$ (6) | 14300 | 13400 | 12600 | 20650 | 21800 | 19200 | 28600 | 26800 | 25200 | 42900 | 41300 |
| Air throw (2) | standard | m (6) | 45 | 42 | 40 | 45 | 37 | 43 | 46 | 44 | 42 | 52 | 46 |
| | with **VPA** option | m (6) | 60 | 57 | 55 | 60 | 52 | 58 | 61 | 59 | 57 | 67 | 61 |
| Acoustic | Lp 4m | dB(A) (7) | 59 | 59 | 59 | 53 | 54 | 53 | 62 | 62 | 62 | 64 | 56 |
| Electric defrost **E1U** (3) | Ω | Nb | 6 | 6 | 9 | 6 | 6 | 6 | 6 | 6 | 9 | 6 | 6 |
| | 400 V/3/50 Hz | W | 6900 | 6900 | 10350 | 9000 | 13200 | 9000 | 13200 | 13200 | 19800 | 19500 | 17400 |
| | | A | 10.0 | 10.0 | 14.9 | 13.0 | 19.1 | 13.0 | 19.1 | 19.1 | 28.6 | 28.1 | 25.1 |
| Electric defrost **ELU** (3) | Ω | Nb | 6 | 9 | 12 | 6 | 6 | 9 | 6 | 9 | 12 | 6 | 6 |
| | 400 V/3/50 Hz | W | 6900 | 10350 | 13800 | 9000 | 13200 | 13500 | 13200 | 19800 | 26400 | 19500 | 17400 |
| | | A | 10.0 | 14.9 | 19.9 | 13.0 | 19.1 | 19.5 | 19.1 | 28.6 | 38.1 | 28.1 | 25.1 |
| Electric defrost kit Kit **ECK** (4) | Ω | Nb | - | 3 | 3 | - | - | 3 | - | 3 | 3 | - | - |
| | 400 V/3/50 Hz | W | - | 3450 | 3450 | - | - | 4500 | - | 6600 | 6600 | - | - |
| | | A | - | 5.0 | 5.0 | - | - | 6.5 | - | 9.5 | 9.5 | - | - |
| Kit **ECK** | | Nb | 0 | 1 | 1 | 0 | 0 | 1 | 0 | 1 | 1 | 0 | 0 |
| Connections | Inlet | Ø | 7/8" | 1 1/8" | 1 1/8" | 1 3/8" | 1 3/8" | 1 3/8" | 1 3/8" | 1 3/8" | 1 5/8" | 1 5/8" | 1 5/8" |
| | Outlet | Ø | 1 3/8" | 1 5/8" | 1 5/8" | 1 5/8" | 2 1/8" | 2 1/8" | 2 1/8" | 2 1/8" | 2 1/8" | 2 1/8" | 2 1/8" |
| Net weight | | kg | 160 | 180 | 190 | 230 | 260 | 260 | 260 | 290 | 330 | 360 | 400 |

| | | NKH ... L | 4x6Y B1 | 2x8D C2 | 3x6D B2 | 4x6D B1 | 3x8D C1 | 3x6D B3 | 4x6D B2 | 3x8D C2 | 4x6D B3 | 4x8D C1 | 4x8D C2 |
|---|---|---|---|---|---|---|---|---|---|---|---|---|---|
| Capacity R404A (1) | DT1 = 8K - SC2 | kW (6) | **60.37** | **68.11** | **68.38** | **70.59** | **73.57** | **75.77** | **88.61** | **100.68** | **102.39** | **109.66** | **119.66** |
| Surface | | $m^2$ | 214.4 | 268.5 | 241.2 | 214.4 | 268.5 | 322.3 | 322.2 | 402.8 | 428.9 | 358.0 | 536.3 |
| Circuit volume | | $dm^3$ | 55.7 | 71.8 | 64.6 | 55.7 | 69.6 | 86.2 | 83.5 | 104.3 | 111.3 | 92.8 | 139.1 |
| Fan * | Nb x Ø | mm | 4 x 630 | 2 x 800 | 3 x 630 | 4 x 630 | 3 x 800 | 3 x 630 | 4 x 630 | 3 x 800 | 4 x 630 | 4 x 800 | 4 x 800 |
| Air flow | | $m^3/h$ (6) | 43600 | 38400 | 40200 | 57200 | 61950 | 37800 | 53600 | 57600 | 50400 | 82600 | 76800 |
| Air throw (2) | standard | m (6) | 46 | 43 | 49 | 58 | 53 | 47 | 55 | 50 | 52 | 59 | 55 |
| | with **VPA** option | m (6) | 61 | 58 | 64 | 73 | 68 | 62 | 70 | 65 | 67 | 74 | 70 |
| Acoustic | Lp 4m | dB(A) (7) | 57 | 56 | 64 | 65 | 58 | 64 | 65 | 58 | 65 | 59 | 59 |
| Electric defrost **E1U** (3) | Ω | Nb | 6 | 6 | 6 | 6 | 6 | 9 | 6 | 6 | 9 | 6 | 6 |
| | 400 V/3/50 Hz | W | 25800 | 17400 | 19500 | 25800 | 25800 | 29250 | 25800 | 25800 | 38700 | 34200 | 34200 |
| | | A | 37.2 | 25.1 | 28.1 | 37.2 | 37.2 | 42.2 | 37.2 | 37.2 | 55.9 | 49.4 | 49.4 |
| Electric defrost **ELU** (3) | Ω | Nb | 6 | 9 | 9 | 6 | 6 | 12 | 9 | 9 | 12 | 6 | 9 |
| | 400 V/3/50 Hz | W | 25800 | 26100 | 29250 | 25800 | 25800 | 39000 | 38700 | 38700 | 51600 | 34200 | 51300 |
| | | A | 37.2 | 37.7 | 42.2 | 37.2 | 37.2 | 56.3 | 55.9 | 55.9 | 74.5 | 49.4 | 74.0 |
| Electric defrost kit Kit **ECK** (4) | Ω | Nb | - | 3 | 3 | - | - | 3 | 3 | 3 | 3 | - | 3 |
| | 400 V/3/50 Hz | W | - | 8700 | 9750 | - | - | 9750 | 12900 | 12900 | 12900 | - | 17100 |
| | | A | - | 12.6 | 14.1 | - | - | 14.1 | 18.6 | 18.6 | 18.6 | - | 24.7 |
| Kit **ECK** | | Nb | 0 | 1 | 1 | 0 | 0 | 1 | 1 | 1 | 1 | 0 | 1 |
| Connections | Inlet | Ø | 1 5/8" | 1 5/8" | 2x 1 3/8" | 2x 1 3/8" | 1 5/8" | 1 5/8" | 2x 1 3/8" | 2x 1 5/8" | 2x 1 5/8" | 2x 1 5/8" | 2x 1 5/8" |
| | Outlet | Ø | 2 5/8" | 2 5/8" | 2x 2 1/8" | 2x 2 1/8" | 2 5/8" | 2 5/8" | 2x 2 1/8" | 2x 2 1/8" | 2x 2 1/8" | 2x 2 1/8" | 2x 2 1/8" |
| Net weight | | kg | 470 | 460 | 410 | 470 | 550 | 460 | 530 | 650 | 600 | 720 | 800 |

** Ø 630 mm : 400 V/3/50 Hz : Δ = 1900 W max - 3,20 A max - Y = 1200 W max - 1,95 A max (5)*
** Ø 800 mm : 400 V/3/50 Hz : Δ = 2000 W max - 4,00 A max - Y = 1250 W max - 2,30 A max (5)*

*(1) See page 10.*
*(2) Residual air speed: 0.25 m/s, in compliance with standard.*
*(3) Electric defrost options.*
*(4) Electric defrost kit.*
*(5) Setting of overload protection levels. For air temperatures "ti" other than +20 °C, multiply the currents in relation to 293/(273 + "ti") in order to obtain an approximate current value after the room temperature is attained.*
*(6) For motor connection in star (Y) instead of delta (D), refer to the correction factors.*
*(7) Average sound pressure level in dB(A) measured at 4 m, at fan height, in direct line of sight on a reflective surface, given for information only.*

| M60 | CMU | C2V | VGT | VPM | BAE | BXT | WCO | EGU | CO2 | E1K | E1U | ECK* | ECU* | ELU | HG1 | HGT | RVK | RVU | DAE | ECB | EIS | KMS |
|---|---|---|---|---|---|---|---|---|---|---|---|---|---|---|---|---|---|---|---|---|---|---|
| O | O | O | O | O | O | O | +👤 | +👤 | - | O | O | O | O | O | O | O | O | O | O | O | O | O |

** Except NKH 1x6D B1 L - NKH 1x8D C1 L - NKH 2x6Y B1 L - NKH 2x6D B1 L - NKH 3x6D B1 L - NKH 2x8D C1 L - NKH 4x6Y B1 L - NKH 4x6D B1 L - NKH 3x8D C1 L - NKH 4x8D C1 L*

## NKT ... C T = Large heat exchange surface 6 mm

| | | NKT ... C | 1x6D B2 | 1x6D B3 | 1x6D B4 | 1x8D C2 | 2x6Y B2 | 1x8D C3 | 2x6D B2 | 2x6D B3 | 2x6D B4 | 3x6D B2 | 2x8D C2 |
|---|---|---|---|---|---|---|---|---|---|---|---|---|---|
| Capacity R404A (1) | **DT1 = 7K - SC3** | **kW** (6) | **12.88** | **15.63** | **17.68** | **19.78** | **23.28** | **23.51** | **26.26** | **31.83** | **35.97** | **39.84** | **40.01** |
| Surface | | **$m^2$** | 101.2 | 135.0 | 168.7 | 162.0 | 202.5 | 216.0 | 202.5 | 270.0 | 337.4 | 303.7 | 323.9 |
| Circuit volume | | **$dm^3$** | 27.4 | 36.5 | 45.6 | 43.8 | 54.8 | 58.4 | 54.8 | 73.0 | 91.3 | 82.2 | 87.6 |
| Fan * | Nb x Ø | **mm** | 1 x 630 | 1 x 630 | 1 x 630 | 1 x 800 | 2 x 630 | 1 x 800 | 2 x 630 | 2 x 630 | 2 x 630 | 3 x 630 | 2 x 800 |
| Air flow | | **$m^3/h$** (6) | 14350 | 13850 | 13200 | 20450 | 21800 | 19300 | 28700 | 27700 | 26400 | 43050 | 40900 |
| Air throw (2) | standard | **m** (6) | 45 | 43 | 42 | 45 | 35 | 43 | 46 | 45 | 43 | 52 | 46 |
| | with **VPA** option | **m** (6) | 60 | 58 | 57 | 60 | 50 | 58 | 61 | 60 | 58 | 67 | 61 |
| Acoustic | **Lp 4m** | **dB(A)** (7) | 59 | 59 | 59 | 53 | 54 | 53 | 62 | 62 | 62 | 64 | 56 |
| Electric defrost | Ω | **Nb** | 9 | 12 | 15 | 9 | 9 | 12 | 9 | 12 | 15 | 9 | 9 |
| | 400 V/3/50 Hz | **W** | 10350 | 13800 | 17250 | 13500 | 19800 | 18000 | 19800 | 26400 | 33000 | 29250 | 26100 |
| | | **A** | 14.9 | 19.9 | 24.9 | 19.5 | 28.6 | 26.0 | 28.6 | 38.1 | 47.6 | 42.2 | 37.7 |
| Connections | Inlet | **Ø** | 5/8" | 7/8" | 1 1/8" | 1 1/8" | 1 1/8" | 1 1/8" | 1 1/8" | 1 3/8" | 1 5/8" | 1 5/8" | 1 3/8" |
| | Outlet | **Ø** | 1 3/8" | 1 5/8" | 2 1/8" | 2 1/8" | 2 1/8" | 2 1/8" | 2 1/8" | 2 5/8" | 2 5/8" | 2 5/8" | 2 5/8" |
| Net weight | | **kg** | 200 | 220 | 240 | 290 | 340 | 330 | 340 | 390 | 430 | 490 | 520 |

| | | NKT ... C | 3x6D B3 | 2x8D C3 | 4x6D B2 | 3x6D B4 | 3x8D C2 | 4x6D B3 | 4x6D B4 | 3x8D C3 | 4x8D C2 | 4x8D C3 |
|---|---|---|---|---|---|---|---|---|---|---|---|---|
| Capacity R404A (1) | **DT1 = 7K - SC3** | **kW** (6) | **47.53** | **47.69** | **53.07** | **53.41** | **60.44** | **64.04** | **69.48** | **70.85** | **81.06** | **95.58** |
| Surface | | **$m^2$** | 404.9 | 431.9 | 404.9 | 506.2 | 485.9 | 539.9 | 674.9 | 647.9 | 647.9 | 863.8 |
| Circuit volume | | **$dm^3$** | 109.5 | 116.8 | 109.5 | 136.9 | 131.4 | 146.0 | 182.6 | 175.3 | 175.2 | 233.7 |
| Fan * | Nb x Ø | **mm** | 3 x 630 | 2 x 800 | 4 x 630 | 3 x 630 | 3 x 800 | 4 x 630 | 4 x 630 | 3 x 800 | 4 x 800 | 4 x 800 |
| Air flow | | **$m^3/h$** (6) | 41550 | 38600 | 57400 | 39600 | 61350 | 55400 | 52800 | 57900 | 81800 | 77200 |
| Air throw (2) | standard | **m** (6) | 51 | 44 | 58 | 49 | 53 | 56 | 54 | 50 | 59 | 56 |
| | with **VPA** option | **m** (6) | 66 | 59 | 73 | 64 | 68 | 71 | 69 | 65 | 74 | 71 |
| Acoustic | **Lp 4m** | **dB(A)** (7) | 64 | 56 | 65 | 64 | 58 | 65 | 65 | 58 | 59 | 59 |
| Electric defrost | Ω | **Nb** | 12 | 12 | 9 | 15 | 9 | 12 | 15 | 12 | 9 | 12 |
| | 400 V/3/50 Hz | **W** | 39000 | 34800 | 38700 | 48750 | 38700 | 51600 | 64500 | 51600 | 51300 | 68400 |
| | | **A** | 56.3 | 50.2 | 55.9 | 70.4 | 55.9 | 74.5 | 93.1 | 74.5 | 74.0 | 98.7 |
| Connections | Inlet | **Ø** | 1 5/8" | 1 1/8" | 1 5/8" | 1 5/8" | 2 x 1 3/8" | 2 x 1 5/8" | 1 5/8" | 1 5/8" | 2 x 1 3/8" | 2 x 1 5/8" |
| | Outlet | **Ø** | 2 5/8" | 2 5/8" | 2 5/8" | 2 5/8" | 2 x 2 1/8" | 2 x 2 5/8" | 3 1/8" | 3 1/8" | 2 x 2 5/8" | 2 x 2 5/8" |
| Net weight | | **kg** | 550 | 580 | 630 | 620 | 740 | 720 | 800 | 840 | 940 | 1080 |

** Ø 630 mm : 400 V/3/50 Hz : Δ = 1900 W max - 3,20 A max - Y = 1200 W max - 1,95 A max (5)*
** Ø 800 mm : 400 V/3/50 Hz : Δ = 2000 W max - 4,00 A max - Y = 1250 W max - 2,30 A max (5)*

*(1) See page 10.*
*(2) Residual air speed: 0.25 m/s, in compliance with standard.*
*(3) Electric defrost options.*
*(4) Electric defrost kit.*
*(5) Setting of overload protection levels. For air temperatures "ti" other than +20 °C, multiply the currents in relation to 293/(273 + "ti") in order to obtain an approximate current value after the room temperature is attained.*
*(6) For motor connection in star (Y) instead of delta (D), refer to the correction factors.*
*(7) Average sound pressure level in dB(A) measured at 4 m, at fan height, in direct line of sight on a reflective surface, given for information only.*

| M60 | CMU | C2V | VGT | VPM | BAE | BXT | WCO | EGU | CO2 | E1K | E1U | ECK | ECU | ELU | HG1 | HGT | RVK | RVU | DAE | ECB | EIS | KMS |
|---|---|---|---|---|---|---|---|---|---|---|---|---|---|---|---|---|---|---|---|---|---|---|
| O | O | O | O | O | O | O | - | - | - | - | - | - | O | S | O | O | O | O | - | O | O | O |

**S :** *Standard*

## NKH ... C H = High-efficiency fin 6 mm

| | | NKH ... C | 1x6D B1 | 1x6D B2 | 1x6D B3 | 1x8D C1 | 2x6Y B1 | 1x8D C2 | 2x6D B1 | 2x6Y B2 | 2x6D B2 | 3x6D B1 |
|---|---|---|---|---|---|---|---|---|---|---|---|---|
| Capacity R404A (1) | **DT1 = 7K - SC3** | **kW** (6) | **12.94** | **17.00** | **19.86** | **20.64** | **23.23** | **26.02** | **26.31** | **29.76** | **34.50** | **39.59** |
| Surface | | **$m^2$** | 53.7 | 80.4 | 107.4 | 89.5 | 107.2 | 134.3 | 107.2 | 161.1 | 161.1 | 160.8 |
| Circuit volume | | **$dm^3$** | 14.4 | 21.6 | 28.7 | 23.9 | 28.7 | 35.9 | 28.7 | 43.1 | 43.1 | 43.1 |
| Fan * | Nb x Ø | **mm** | 1 x 630 | 1 x 630 | 1 x 630 | 1 x 800 | 2 x 630 | 1 x 800 | 2 x 630 | 2 x 630 | 2 x 630 | 3 x 630 |
| Air flow | | **$m^3/h$** (6) | 14300 | 13400 | 12600 | 20650 | 21800 | 19200 | 28600 | 20500 | 26800 | 42900 |
| Air throw (2) | standard | **m** (6) | 45 | 42 | 40 | 45 | 37 | 43 | 46 | 36 | 44 | 52 |
| | with **VPA** option | **m** (6) | 60 | 57 | 55 | 60 | 52 | 58 | 61 | 51 | 59 | 67 |
| Acoustic | **Lp 4m** | **dB(A)** (7) | 59 | 59 | 59 | 53 | 54 | 53 | 62 | 54 | 62 | 64 |
| Electric defrost | Ω | **Nb** | 6 | 9 | 12 | 6 | 6 | 9 | 6 | 9 | 9 | 6 |
| | 400 V/3/50 Hz | **W** | 6900 | 10350 | 13800 | 9000 | 13200 | 13500 | 13200 | 19800 | 19800 | 19500 |
| | | **A** | 10.0 | 14.9 | 19.9 | 13.0 | 19.1 | 19.5 | 19.1 | 28.6 | 28.6 | 28.1 |
| Connections | Inlet | **Ø** | 7/8" | 1 1/8" | 1 1/8" | 1 3/8" | 1 3/8" | 1 3/8" | 1 3/8" | 1 3/8" | 1 5/8" | 1 5/8" |
| | Outlet | **Ø** | 1 5/8" | 2 1/8" | 2 1/8" | 2 1/8" | 2 1/8" | 2 1/8" | 2 1/8" | 2 1/8" | 2 5/8" | 2 5/8" |
| Net weight | | **kg** | 170 | 190 | 210 | 250 | 290 | 280 | 290 | 320 | 320 | 410 |

| | | NKH ... C | 2x6D B3 | 2x8D C1 | 2x8D C2 | 3x6D B2 | 3x8D C1 | 4x6D B1 | 3x6D B3 | 3x8D C2 | 4x6D B3 | 4x8D C1 |
|---|---|---|---|---|---|---|---|---|---|---|---|---|
| Capacity R404A (1) | **DT1 = 7K - SC3** | **kW** (6) | **40.23** | **41.67** | **46.13** | **51.95** | **52.93** | **53.78** | **60.50** | **68.49** | **70.22** | **83.57** |
| Surface | | **$m^2$** | 214.4 | 179.0 | 268.5 | 241.2 | 268.5 | 214.4 | 322.3 | 402.8 | 428.9 | 358.0 |
| Circuit volume | | **$dm^3$** | 57.5 | 47.9 | 71.8 | 64.6 | 69.6 | 55.7 | 86.2 | 104.3 | 111.3 | 92.8 |
| Fan * | Nb x Ø | **mm** | 2 x 630 | 2 x 800 | 2 x 800 | 3 x 630 | 3 x 800 | 4 x 630 | 3 x 630 | 3 x 800 | 4 x 630 | 4 x 800 |
| Air flow | | **$m^3/h$** (6) | 25200 | 41300 | 38400 | 40200 | 61950 | 57200 | 37800 | 57600 | 50400 | 82600 |
| Air throw (2) | standard | **m** (6) | 42 | 46 | 43 | 49 | 53 | 58 | 47 | 50 | 52 | 59 |
| | with **VPA** option | **m** (6) | 57 | 61 | 58 | 64 | 68 | 73 | 62 | 65 | 67 | 74 |
| Acoustic | **Lp 4m** | **dB(A)** (7) | 62 | 56 | 56 | 64 | 58 | 65 | 64 | 58 | 65 | 59 |
| Electric defrost | Ω | **Nb** | 12 | 6 | 9 | 9 | 6 | 6 | 12 | 9 | 12 | 6 |
| | 400 V/3/50 Hz | **W** | 26400 | 17400 | 26100 | 29250 | 25800 | 25800 | 39000 | 38700 | 51600 | 34200 |
| | | **A** | 38.1 | 25.1 | 37.7 | 42.2 | 37.2 | 37.2 | 56.3 | 55.9 | 74.5 | 49.4 |
| Connections | Inlet | **Ø** | 1 5/8" | 1 5/8" | 1 5/8" | 2 x 1 3/8" | 1 5/8" | 2 x 1 5/8" | 2 x 1 5/8" | 2 x 1 5/8" | 2 x 1 5/8" | 2 x 1 5/8" |
| | Outlet | **Ø** | 2 5/8" | 2 5/8" | 2 5/8" | 2 x 2 1/8" | 2 5/8" | 2 x 2 1/8" | 2 x 2 1/8" | 2 x 2 5/8" | 2 x 2 5/8" | 2 x 2 5/8" |
| Net weight | | **kg** | 360 | 440 | 500 | 460 | 600 | 520 | 520 | 700 | 670 | 780 |

** Ø 630 mm : 400 V/3/50 Hz : Δ = 1900 W max - 3,20 A max - Y = 1200 W max - 1,95 A max (5)*
** Ø 800 mm : 400 V/3/50 Hz : Δ = 2000 W max - 4,00 A max - Y = 1250 W max - 2,30 A max (5)*

*(1) See page 10.*
*(2) Residual air speed: 0.25 m/s, in compliance with standard.*
*(3) Electric defrost options.*
*(4) Electric defrost kit.*
*(5) Setting of overload protection levels. For air temperatures "ti" other than +20 °C, multiply the currents in relation to 293/(273 + "ti") in order to obtain an approximate current value after the room temperature is attained.*
*(6) For motor connection in star (Y) instead of delta (D), refer to the correction factors.*
*(7) Average sound pressure level in dB(A) measured at 4 m, at fan height, in direct line of sight on a reflective surface, given for information only.*

| M60 | CMU | C2V | VGT | VPM | BAE | BXT | WCO | EGU | CO2 | E1K | E1U | ECK | ECU | ELU | HG1 | HGT | RVK | RVU | DAE | ECB | EIS | KMS |
|---|---|---|---|---|---|---|---|---|---|---|---|---|---|---|---|---|---|---|---|---|---|---|
| O | O | O | O | O | O | O | - | - | - | - | - | - | O | S | O | O | O | O | - | O | O | O |

**S :** *Standard*

## NKT ... S T = Large heat exchange surface 9 mm

| | | NKT ... S | 1x6D B2 | 1x6D B3 | 1x6D B4 | 1x8D C2 | 2x6Y B2 | 1x8D C3 | 2x6D B2 | 2x6D B3 | 2x6D B4 | 3x6D B2 | 2x8D C2 |
|---|---|---|---|---|---|---|---|---|---|---|---|---|---|
| Capacity R404A (1) | **DT1 = 7K - SC3** | **kW** (6) | **12.31** | **15.00** | **17.20** | **18.74** | **21.95** | **22.63** | **25.10** | **30.56** | **34.97** | **37.97** | **37.98** |
| | **DT1 = 6K - SC4** | **kW** (6) | **9.34** | **11.44** | **13.20** | **14.29** | **16.85** | **17.37** | **19.10** | **23.40** | **26.93** | **28.99** | **29.05** |
| Surface | | **$m^2$** | 70.0 | 93.3 | 116.6 | 111.9 | 139.9 | 149.2 | 139.9 | 186.6 | 233.2 | 209.9 | 223.9 |
| Circuit volume | | **$dm^3$** | 27.4 | 36.5 | 45.6 | 43.8 | 54.8 | 58.4 | 54.8 | 73.0 | 91.3 | 82.2 | 87.6 |
| Fan * | Nb x Ø | **mm** | 1 x 630 | 1 x 630 | 1 x 630 | 1 x 800 | 2 x 630 | 1 x 800 | 2 x 630 | 2 x 630 | 2 x 630 | 3 x 630 | 2 x 800 |
| Air flow | | **$m^3/h$** (6) | 14800 | 14250 | 13800 | 21100 | 22400 | 20100 | 29600 | 28500 | 27600 | 44400 | 42200 |
| Air throw (2) | standard | **m** (6) | 46 | 44 | 42 | 46 | 36 | 44 | 47 | 46 | 45 | 54 | 47 |
| | with **VPA** option | **m** (6) | 61 | 59 | 57 | 61 | 51 | 59 | 62 | 61 | 60 | 69 | 62 |
| Acoustic | **Lp 4m** | **dB(A)** (7) | 59 | 59 | 59 | 53 | 54 | 53 | 62 | 62 | 62 | 64 | 56 |
| Electric defrost | Ω | **Nb** | 9 | 12 | 15 | 9 | 9 | 12 | 9 | 12 | 15 | 9 | 9 |
| | 400 V/3/50 Hz | **W** | 10350 | 13800 | 17250 | 13500 | 19800 | 18000 | 19800 | 26400 | 33000 | 29250 | 26100 |
| | | **A** | 14.9 | 19.9 | 24.9 | 19.5 | 28.6 | 26.0 | 28.6 | 38.1 | 47.6 | 42.2 | 37.7 |
| Connections | Inlet | **Ø** | 5/8" | 7/8" | 1 1/8" | 1 1/8" | 1 1/8" | 1 1/8" | 1 1/8" | 1 3/8" | 1 5/8" | 1 5/8" | 1 5/8" |
| | Outlet | **Ø** | 1 3/8" | 1 5/8" | 2 1/8" | 2 1/8" | 2 1/8" | 2 1/8" | 2 1/8" | 2 1/8" | 2 5/8" | 2 5/8" | 2 5/8" |
| Net weight | | **kg** | 190 | 220 | 240 | 280 | 330 | 320 | 330 | 370 | 410 | 470 | 500 |

| | | NKT ... S | 3x6D B3 | 2x8D C3 | 4x6D B2 | 3x6D B4 | 3x8D C2 | 4x6D B3 | 3x8D C3 | 4x6D B4 | 4x8D C2 | 4x8D C3 |
|---|---|---|---|---|---|---|---|---|---|---|---|---|
| Capacity R404A (1) | **DT1 = 7K - SC3** | **kW** (6) | **45.55** | **45.87** | **50.49** | **51.68** | **57.22** | **61.20** | **68.59** | **70.54** | **77.32** | **92.63** |
| | **DT1 = 6K - SC4** | **kW** (6) | **34.96** | **35.26** | **38.55** | **39.88** | **43.83** | **46.98** | **52.82** | **53.71** | **59.15** | **71.34** |
| Surface | | **$m^2$** | 279.8 | 298.5 | 279.8 | 349.8 | 335.8 | 373.1 | 447.7 | 466.4 | 447.7 | 597.0 |
| Circuit volume | | **$dm^3$** | 109.5 | 116.8 | 109.5 | 136.9 | 131.4 | 146.0 | 175.3 | 182.6 | 175.2 | 233.7 |
| Fan * | Nb x Ø | **mm** | 3 x 630 | 2 x 800 | 4 x 630 | 3 x 630 | 3 x 800 | 4 x 630 | 3 x 800 | 4 x 630 | 4 x 800 | 4 x 800 |
| Air flow | | **$m^3/h$** (6) | 42750 | 40200 | 59200 | 41400 | 63300 | 57000 | 60300 | 55200 | 84400 | 80400 |
| Air throw (2) | standard | **m** (6) | 52 | 45 | 59 | 51 | 54 | 57 | 52 | 56 | 60 | 58 |
| | with **VPA** option | **m** (6) | 67 | 60 | 74 | 66 | 69 | 72 | 67 | 71 | 75 | 73 |
| Acoustic | **Lp 4m** | **dB(A)** (7) | 64 | 56 | 65 | 64 | 58 | 65 | 58 | 65 | 59 | 59 |
| Electric defrost | Ω | **Nb** | 12 | 12 | 9 | 15 | 9 | 12 | 12 | 15 | 9 | 12 |
| | 400 V/3/50 Hz | **W** | 39000 | 34800 | 38700 | 48750 | 38700 | 51600 | 51600 | 64500 | 51300 | 68400 |
| | | **A** | 56.3 | 50.2 | 55.9 | 70.4 | 55.9 | 74.5 | 74.5 | 93.1 | 74.0 | 98.7 |
| Connections | Inlet | **Ø** | 1 5/8" | 1 5/8" | 1 5/8" | 1 5/8" | 2x 1 3/8" | 2x 1 5/8" | 2x 1 5/8" | 2x 1 5/8" | 2x 1 3/8" | 2x 1 5/8" |
| | Outlet | **Ø** | 2 5/8" | 2 5/8" | 2 5/8" | 2 5/8" | 2x 2 1/8" | 2x 2 1/8" | 2x 2 5/8" | 2x 2 5/8" | 2x 2 5/8" | 2x 2 5/8" |
| Net weight | | **kg** | 530 | 560 | 610 | 590 | 710 | 690 | 800 | 770 | 910 | 1030 |

** Ø 630 mm : 400 V/3/50 Hz : Δ = 1900 W max - 3,20 A max - Y = 1200 W max - 1,95 A max (5)*
** Ø 800 mm : 400 V/3/50 Hz : Δ = 2000 W max - 4,00 A max - Y = 1250 W max - 2,30 A max (5)*

*(1) See page 10.*
*(2) Residual air speed: 0.25 m/s, in compliance with standard.*
*(3) Electric defrost options.*
*(4) Electric defrost kit.*
*(5) Setting of overload protection levels. For air temperatures "ti" other than +20 °C, multiply the currents in relation to 293/(273 + "ti") in order to obtain an approximate current value after the room temperature is attained.*
*(6) For motor connection in star (Y) instead of delta (D), refer to the correction factors.*
*(7) Average sound pressure level in dB(A) measured at 4 m, at fan height, in direct line of sight on a reflective surface, given for information only.*

| M60 | CMU | C2V | VGT | VPM | BAE | BXT | WCO | EGU | CO2 | E1K | E1U | ECK | ECU | ELU | HG1 | HGT | RVK | RVU | DAE | ECB | EIS | KMS |
|---|---|---|---|---|---|---|---|---|---|---|---|---|---|---|---|---|---|---|---|---|---|---|
| O | O | O | O | O | O | O | - | - | - | - | - | - | O | S | O | O | O | O | - | O | O | O |

**S :** *Standard*

## NKH ... S H = High-efficiency fin 9 mm

| | | NKH ... S | 1x6D B1 | 1x6D B2 | 1x8D C1 | 1x6D B3 | 2x6Y B1 | 2x6D B1 | 1x8D C2 | 2x6Y B2 | 2x6D B2 | 3x6D B1 | 2x8D C1 | 2x6D B3 |
|---|---|---|---|---|---|---|---|---|---|---|---|---|---|---|
| Capacity R404A (1) | DT1 = 7K - SC3 | kW (6) | 11.07 | 14.89 | 17.47 | 17.84 | 19.73 | 22.44 | 22.92 | 26.07 | 30.17 | 33.83 | 35.27 | 36.08 |
| | DT1 = 6K - SC4 | kW (6) | 8.64 | 11.70 | 13.75 | 14.10 | 15.54 | 17.57 | 18.02 | 20.66 | 23.77 | 26.51 | 27.80 | 28.56 |
| Capacity CO2** | DT1 = 7K - SC3 | kW (6) | - | - | - | 16,61 | 17,88 | 20,38 | - | 23,87 | 27,60 | 30,58 | - | 33,25 |
| | DT1 = 6K - SC4 | kW (6) | - | - | - | 14,10 | 15,11 | 17,18 | - | 20,26 | 23,37 | 25,79 | - | 28,22 |
| Surface | | $m^2$ | 37.4 | 56.2 | 62.4 | 74.9 | 74.9 | 74.9 | 93.6 | 112.3 | 112.3 | 112.3 | 124.8 | 149.8 |
| Circuit volume | | $dm^3$ | 14.4 | 21.6 | 23.9 | 28.7 | 28.7 | 28.7 | 35.9 | 43.1 | 43.1 | 43.1 | 47.9 | 57.5 |
| Fan * | Nb x Ø | mm | 1 x 630 | 1 x 630 | 1 x 800 | 1 x 630 | 2 x 630 | 2 x 630 | 1 x 800 | 2 x 630 | 2 x 630 | 3 x 630 | 2 x 800 | 2 x 630 |
| Air flow | | $m^3/h$ (6) | 14800 | 14050 | 21400 | 13400 | 22600 | 29600 | 20150 | 21400 | 28100 | 44400 | 42800 | 26800 |
| Air throw (2) | standard | m (6) | 46 | 44 | 47 | 42 | 38 | 47 | 44 | 37 | 45 | 54 | 48 | 44 |
| | with **VPA** option | m (6) | 61 | 59 | 62 | 57 | 53 | 62 | 59 | 52 | 60 | 69 | 63 | 59 |
| Acoustic | Lp 4m | dB(A) (7) | 59 | 59 | 53 | 59 | 54 | 62 | 53 | 54 | 62 | 64 | 56 | 62 |
| Electric defrost | Ω | Nb | 6 | 9 | 6 | 12 | 6 | 6 | 9 | 9 | 9 | 6 | 6 | 12 |
| | 400 V/3/50 Hz | W | 6900 | 10350 | 9000 | 13800 | 13200 | 13200 | 13500 | 19800 | 19800 | 19500 | 17400 | 26400 |
| | | A | 10.0 | 14.9 | 13.0 | 19.9 | 19.1 | 19.1 | 19.5 | 28.6 | 28.6 | 28.1 | 25.1 | 38.1 |
| Connections | Inlet | Ø | 7/8" | 1 1/8" | 1 3/8" | 1 1/8" | 1 3/8" | 1 3/8" | 1 3/8" | 1 3/8" | 1 5/8" | 1 5/8" | 1 5/8" | 1 3/8" |
| | Outlet | Ø | 1 5/8" | 1 5/8" | 2 1/8" | 2 1/8" | 2 1/8" | 2 1/8" | 2 1/8" | 2 1/8" | 2 5/8" | 2 5/8" | 2 5/8" | 2 5/8" |
| Net weight | | kg | 170 | 190 | 250 | 210 | 280 | 280 | 280 | 320 | 320 | 400 | 430 | 360 |

| | | NKH ... S | 4x6Y B1 | 2x8D C2 | 4x6D B1 | 3x6D B2 | 3x8D C1 | 4x6D B2 | 3x6D B3 | 3x8D C2 | 4x6D B3 | 4x8D C1 | 4x8D C2 |
|---|---|---|---|---|---|---|---|---|---|---|---|---|---|
| Capacity R404A (1) | DT1 = 7K - SC3 | kW (6) | 38.06 | 40.85 | 45.15 | 45.47 | 45.80 | 52.83 | 54.36 | 60.62 | 63.76 | 70.85 | 76.19 |
| | DT1 = 6K - SC4 | kW (6) | 29.61 | 31.45 | 35.59 | 35.82 | 35.01 | 40.49 | 43.07 | 46.63 | 49.19 | 55.88 | 57.79 |
| Capacity CO2** | DT1 = 7K - SC3 | kW (6) | 35,78 | - | 40,78 | 41,41 | - | 50,29 | 49,99 | - | 60,90 | - | - |
| | DT1 = 6K - SC4 | kW (6) | 30,24 | - | 34,39 | 35,08 | - | 41,58 | 42,39 | - | 50,55 | - | - |
| Surface | | $m^2$ | 149.8 | 187.2 | 149.8 | 168.5 | 187.2 | 224.6 | 224.7 | 280.8 | 299.5 | 249.6 | 374.4 |
| Circuit volume | | $dm^3$ | 55.7 | 71.8 | 55.7 | 64.6 | 69.6 | 83.5 | 86.2 | 104.3 | 111.3 | 92.8 | 139.1 |
| Fan * | Nb x Ø | mm | 4 x 630 | 2 x 800 | 4 x 630 | 3 x 630 | 3 x 800 | 4 x 630 | 3 x 630 | 3 x 800 | 4 x 630 | 4 x 800 | 4 x 800 |
| Air flow | | $m^3/h$ (6) | 45200 | 40300 | 59200 | 42150 | 64200 | 56200 | 40200 | 60450 | 53600 | 85600 | 80600 |
| Air throw (2) | standard | m (6) | 47 | 45 | 59 | 51 | 55 | 57 | 49 | 52 | 55 | 51 | 48 |
| | with **VPA** option | m (6) | 62 | 60 | 74 | 66 | 70 | 72 | 64 | 67 | 70 | 66 | 63 |
| Acoustic | Lp 4m | dB(A) (7) | 57 | 56 | 65 | 64 | 58 | 65 | 64 | 58 | 65 | 59 | 59 |
| Electric defrost | Ω | Nb | 6 | 9 | 6 | 9 | 6 | 9 | 12 | 9 | 12 | 6 | 9 |
| | 400 V/3/50 Hz | W | 25800 | 26100 | 25800 | 29250 | 25800 | 38700 | 39000 | 38700 | 51600 | 34200 | 51300 |
| | | A | 37.2 | 37.7 | 37.2 | 42.2 | 37.2 | 55.9 | 56.3 | 55.9 | 74.5 | 49.4 | 74.0 |
| Connections | Inlet | Ø | 1 5/8" | 1 5/8" | 2x 1 3/8" | 2x 1 1/8" | 1 5/8" | 2x 1 3/8" | 2x 1 3/8" | 2x 1 5/8" | 2x 1 5/8" | 2x 1 5/8" | 2x 1 5/8" |
| | Outlet | Ø | 2 5/8" | 2 5/8" | 2x 2 1/8" | 2x 2 1/8" | 2 5/8" | 2x 2 1/8" | 2x 2 1/8" | 2x 2 1/8" | 2x 2 5/8" | 2x 2 5/8" | 2x 2 5/8" |
| Net weight | | kg | 510 | 480 | 510 | 450 | 590 | 570 | 510 | 670 | 640 | 770 | 860 |

** Ø 630 mm : 400 V/3/50 Hz : Δ = 1900 W max - 3,20 A max - Y = 1200 W max - 1,95 A max (5)*
** Ø 800 mm : 400 V/3/50 Hz : Δ = 2000 W max - 4,00 A max - Y = 1250 W max - 2,30 A max (5)*
*** Tube diameter to define the order.*

*(1) See page 10.*
*(2) Residual air speed: 0.25 m/s, in compliance with standard.*
*(3) Electric defrost options.*
*(4) Electric defrost kit.*
*(5) Setting of overload protection levels. For air temperatures "ti" other than +20 °C, multiply the currents in relation to 293/(273 + "ti") in order to obtain an approximate current value after the room temperature is attained.*
*(6) For motor connection in star (Y) instead of delta (D), refer to the correction factors.*
*(7) Average sound pressure level in dB(A) measured at 4 m, at fan height, in direct line of sight on a reflective surface, given for information only.*

| M60 | CMU | C2V | VGT | VPM | BAE | BXT | WCO | EGU | CO2 | E1K | E1U | ECK | ECU | ELU | HG1 | HGT | RVK | RVU | DAE | ECB | EIS | KMS |
|---|---|---|---|---|---|---|---|---|---|---|---|---|---|---|---|---|---|---|---|---|---|---|
| O | O | O | O | O | O | O | - | - | +👤 | - | - | - | O | S | O | O | O | O | - | O | O | O |

**S :** *Standard*

## NKT ... T T = Large heat exchange surface 12 mm

| | | NKT ... T | 1x6D B2 | 1x6D B3 | 1x6D B4 | 1x8D C2 | 2x6Y B2 | 1x8D C3 | 2x6D B2 | 2x6D B3 | 2x6D B4 | 3x6D B2 | 2x8D C2 |
|---|---|---|---|---|---|---|---|---|---|---|---|---|---|
| Capacity R404A (1) | **DT1 = 7K - SC3** | **kW** (6) | **10.63** | **13.15** | **15.26** | **16.12** | **19.05** | **19.99** | **21.64** | **26.75** | **31.00** | **32.55** | **33.10** |
| | **DT1 = 6K - SC4** | **kW** (6) | **8.13** | **10.10** | **11.77** | **12.36** | **14.70** | **15.40** | **16.60** | **20.61** | **23.98** | **25.00** | **25.44** |
| Surface | | **$m^2$** | 54.3 | 72.4 | 90.5 | 86.9 | 108.6 | 115.9 | 108.6 | 144.8 | 181.1 | 163.0 | 173.8 |
| Circuit volume | | **$dm^3$** | 27.4 | 36.5 | 45.6 | 43.8 | 54.8 | 58.4 | 54.8 | 73.0 | 91.3 | 82.2 | 87.6 |
| Fan * | Nb x Ø | **mm** | 1 x 630 | 1 x 630 | 1 x 630 | 1 x 800 | 2 x 630 | 1 x 800 | 2 x 630 | 2 x 630 | 2 x 630 | 3 x 630 | 2 x 800 |
| Air flow | | **$m^3/h$** (6) | 14950 | 14500 | 14050 | 21500 | 22800 | 20550 | 29900 | 29000 | 28100 | 44850 | 43000 |
| Air throw (2) | standard | **m** (6) | 46 | 45 | 43 | 47 | 36 | 45 | 48 | 47 | 45 | 54 | 48 |
| | with **VPA** option | **m** (6) | 61 | 60 | 58 | 62 | 51 | 60 | 63 | 62 | 60 | 69 | 63 |
| Acoustic | **Lp 4m** | **dB(A)** (7) | 59 | 59 | 59 | 53 | 54 | 53 | 62 | 62 | 62 | 64 | 56 |
| Electric defrost | Ω | **Nb** | 9 | 12 | 15 | 9 | 9 | 12 | 9 | 12 | 15 | 9 | 9 |
| | 400 V/3/50 Hz | **W** | 10350 | 13800 | 17250 | 13500 | 19800 | 18000 | 19800 | 26400 | 33000 | 29250 | 26100 |
| | | **A** | 14.9 | 19.9 | 24.9 | 19.5 | 28.6 | 26.0 | 28.6 | 38.1 | 47.6 | 42.2 | 37.7 |
| Connections | Inlet | **Ø** | 5/8" | 7/8" | 1 1/8" | 1 1/8" | 1 1/8" | 1 1/8" | 1 1/8" | 1 3/8" | 1 5/8" | 1 5/8" | 1 3/8" |
| | Outlet | **Ø** | 1 3/8" | 1 5/8" | 2 1/8" | 2 1/8" | 2 1/8" | 2 1/8" | 2 1/8" | 2 1/8" | 2 5/8" | 2 5/8" | 2 5/8" |
| Net weight | | **kg** | 190 | 210 | 230 | 280 | 320 | 310 | 320 | 360 | 400 | 460 | 490 |

| | | NKT ... T | 3x6D B3 | 2x8D C3 | 4x6D B2 | 3x6D B4 | 3x8D C2 | 4x6D B3 | 3x8D C3 | 4x6D B4 | 4x8D C2 | 4x8D C3 |
|---|---|---|---|---|---|---|---|---|---|---|---|---|
| Capacity R404A (1) | **DT1 = 7K - SC3** | **kW** (6) | **39.74** | **40.47** | **43.16** | **46.54** | **49.50** | **53.06** | **60.68** | **60.77** | **66.30** | **81.14** |
| | **DT1 = 6K - SC4** | **kW** (6) | **30.64** | **31.27** | **33.08** | **35.91** | **37.99** | **40.95** | **46.81** | **46.84** | **50.99** | **62.70** |
| Surface | | **$m^2$** | 217.3 | 231.8 | 217.3 | 271.6 | 260.7 | 289.7 | 347.6 | 362.1 | 347.6 | 463.5 |
| Circuit volume | | **$dm^3$** | 109.5 | 116.8 | 109.5 | 136.9 | 131.4 | 146.0 | 175.3 | 182.6 | 175.2 | 233.7 |
| Fan * | Nb x Ø | **mm** | 3 x 630 | 2 x 800 | 4 x 630 | 3 x 630 | 3 x 800 | 4 x 630 | 3 x 800 | 4 x 630 | 4 x 800 | 4 x 800 |
| Air flow | | **$m^3/h$** (6) | 43500 | 41100 | 59800 | 42150 | 64500 | 58000 | 61650 | 56200 | 86000 | 82200 |
| Air throw (2) | standard | **m** (6) | 53 | 46 | 60 | 51 | 55 | 58 | 53 | 57 | 61 | 59 |
| | with **VPA** option | **m** (6) | 68 | 61 | 75 | 66 | 70 | 73 | 68 | 72 | 76 | 74 |
| Acoustic | **Lp 4m** | **dB(A)** (7) | 64 | 56 | 65 | 64 | 58 | 65 | 58 | 65 | 59 | 59 |
| Electric defrost | Ω | **Nb** | 12 | 12 | 9 | 15 | 9 | 12 | 12 | 15 | 9 | 12 |
| | 400 V/3/50 Hz | **W** | 39000 | 34800 | 38700 | 48750 | 38700 | 51600 | 51600 | 64500 | 51300 | 68400 |
| | | **A** | 56.3 | 50.2 | 55.9 | 70.4 | 55.9 | 74.5 | 74.5 | 93.1 | 74.0 | 98.7 |
| Connections | Inlet | **Ø** | 1 5/8" | 1 5/8" | 1 5/8" | 1 5/8" | 1 5/8" | 2x 1 5/8" | 1 5/8" | 1 5/8" | 2x 1 3/8" | 2x 1 5/8" |
| | Outlet | **Ø** | 2 5/8" | 2 5/8" | 2 5/8" | 2 5/8" | 2 5/8" | 2x 2 1/8" | 3 1/8" | 3 1/8" | 2x 2 5/8" | 2x 2 5/8" |
| Net weight | | **kg** | 520 | 550 | 600 | 580 | 700 | 670 | 790 | 750 | 890 | 1010 |

** Ø 630 mm : 400 V/3/50 Hz : Δ = 1900 W max - 3,20 A max - Y = 1200 W max - 1,95 A max (5)*
** Ø 800 mm : 400 V/3/50 Hz : Δ = 2000 W max - 4,00 A max - Y = 1250 W max - 2,30 A max (5)*

*(1) See page 10.*
*(2) Residual air speed: 0.25 m/s, in compliance with standard.*
*(3) Electric defrost options.*
*(4) Electric defrost kit.*
*(5) Setting of overload protection levels. For air temperatures "ti" other than +20 °C, multiply the currents in relation to 293/(273 + "ti") in order to obtain an approximate current value after the room temperature is attained.*
*(6) For motor connection in star (Y) instead of delta (D), refer to the correction factors.*
*(7) Average sound pressure level in dB(A) measured at 4 m, at fan height, in direct line of sight on a reflective surface, given for information only.*

| M60 | CMU | C2V | VGT | VPM | BAE | BXT | WCO | EGU | CO2 | E1K | E1U | ECK | ECU | ELU | HG1 | HGT | RVK | RVU | DAE | ECB | EIS | KMS |
|---|---|---|---|---|---|---|---|---|---|---|---|---|---|---|---|---|---|---|---|---|---|---|
| O | O | O | O | O | O | O | - | - | - | - | - | - | O | S | O | O | O | O | - | O | O | O |

**S :** *Standard*

HEATCRAFT™
Worldwide Refrigeration

EUROVENT CERTIFIED PERFORMANCE
www.eurovent-certification.com

E Solutions
Efficiency • Environment

# Freezing tunnel unit cooler

## NW industrial range

- The 54 models of the NW range meet the requirements of rapid deep-freezing and refrigeration applications.
- The high air flow speed guarantees extremely rapid refrigeration of food.
- The height-adjustable legs favour homogenous distribution of air over the products.
- Available air pressure of up to 200 Pa.
- Large heat-exchanger surface, large fin spacing of 6, 9 or 12 mm and optimized defrost.

*Natural fluids:*
*Glycol water*

4 ▁▂▃▅▆ 63 kW

FRIGA-BOHN

HYFRA® PEDIA

HK® REFRIGERATION

Heatcraft reserves itself the right to make changes at any time without preliminary notice - Photos non-contractual

## Market segments

*FCS Food processing*

## Description

### Casing

- The casing is made of pre-painted galvanized steel offering a high resistance to corrosion and impact damage.
- Intermediate aluminium drain pan to protect against the risk of condensation.

### Ventilation

- Two types of fans are used in the NW range:

#### Axial fans

**Models A -** Externally mounted, their fan guards are compliant with safety standards. Three-phase external rotor motors, 400 V, 50 Hz, IP54, class F, 4 P (1,500 rpm), permanently lubricated, internal thermal overload protection.
Available air pressure of up to 100 Pa.

#### Centrifugal fans

**Models C -** "Twin inlet" type with direct drive.
Three-phase enclosed motors, 230/400V, 50 Hz, IP54, class F, 4 P (1,000 rpm), permanently lubricated, internal thermal overload protection.
Available air pressure of up to 200 Pa.

### Coil

- The high-performance and compact finned coils of the NW range are designed with flat-surface aluminium fins spaced at 6, 9 or 12 mm, crimped onto copper tubes.
- The coils are supplied via R404A optimized Venturi distributor(s).
- For all other refrigerants, please contact us.

## Certifications

## Advantages

| Installation |
|---|
| Installation of the unit up against a wall allows maximum filling of the cold room. |
| The height-adjustable feet favour homogenous distribution of air over the products (1). |
| Two blowing positions possible: horizontal (H2) vertical (H4). |
| Floor mounting system for easy installation and maintenance. |
| **Servicing / Maintenance** |
| Easily removable main aluminium drain pan. |
| Hinged side panels offering easy access to electrical and refrigerant connections (2). |

## Désignation

**NW 11**(1) **A1**(2) **S**(3) **100Pa**(4)

(1) Model
(2) **A** = Axial fan - **C** = Centrifugal fan / **1** = Number
(3) Fin spacing: **R/C** = 6 mm - **L/S** = 9 mm - **M/T** = 12 mm
(4) Available pressure

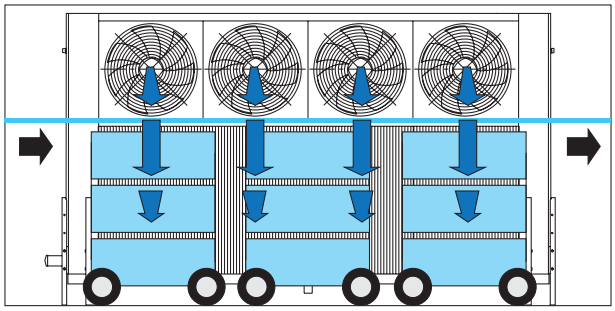

*Deep-freeze tunnel principle with an NW*

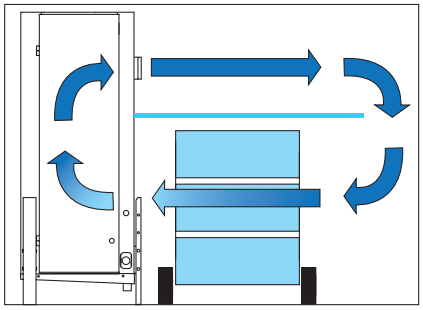

*(1) Height-adjustable legs: 3 amplitude positions 240 mm*

*(2) Accessibility*

## Options

| Kit | Factory | |
|---|---|---|
| | | **Coil** |
| | WCO | Glycol water, coolant (please contact us for details). |
| | CO2 | R744 optimization (please contact us for details). |
| | | **Defrost** |
| | E1U | Light electric defrost. |
| ECK | ECU | Additional coil electric defrost. |
| | HGT | Hot gas (coil and drain pan). |
| RVK | RVU | Shell defrost heaters. |
| | DAE | Water defrost. |
| | | **Miscellaneous** |
| | ECB | Full crate packaging. |
| | | **Other options** |
| | | Please contact us for details. |

## NW .. A ..

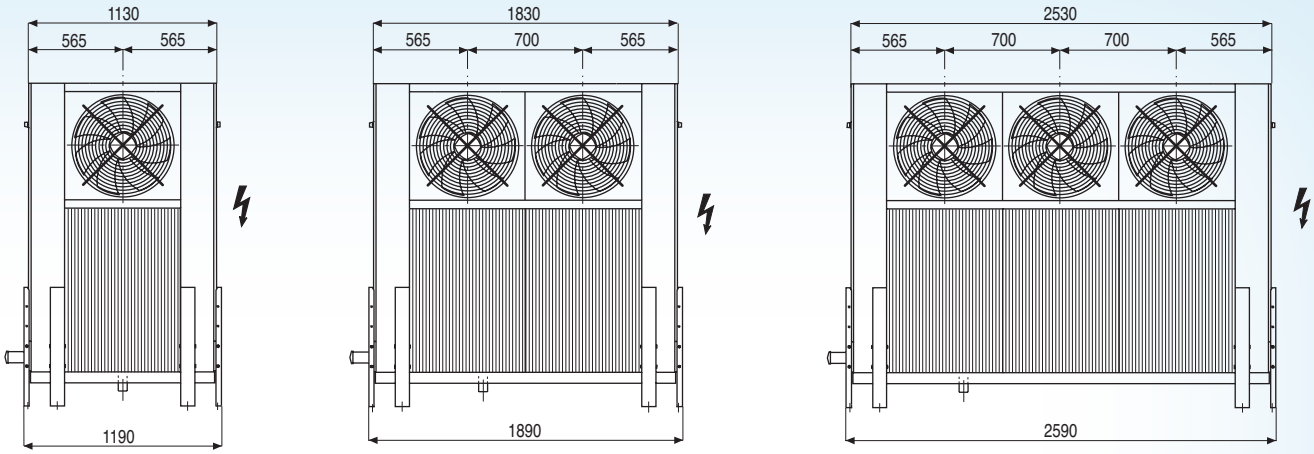


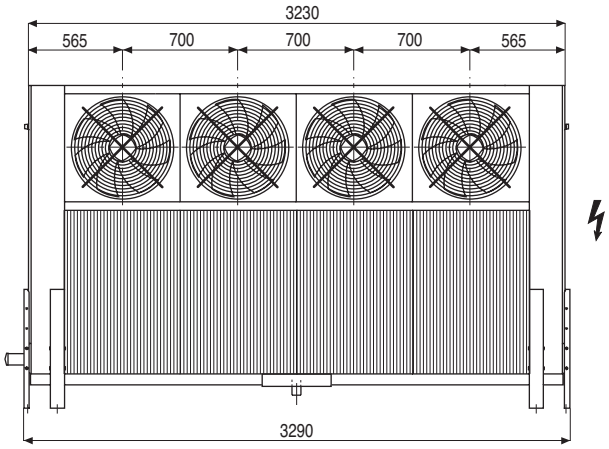


| Fans | 1 | 2 | 3 | 4 |
|---|---|---|---|---|
| A | 785 | 1485 | 2185 | 2885 |
| B | 1140 | 1840 | 2540 | 3240 |
| C | 1950 | 1950 | 1950 | - |
| Ø D | 1” | 1” | 1 1/2” | 1 1/2” |

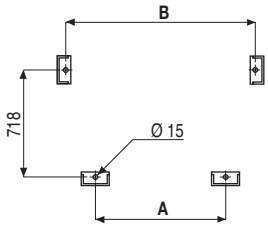


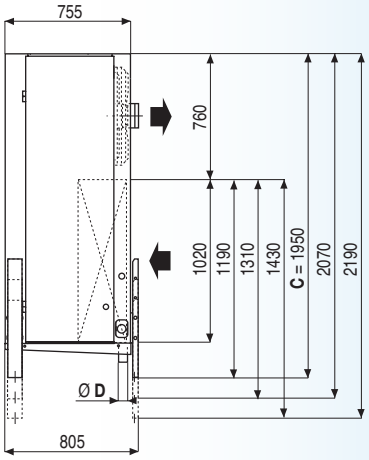


## NW .. C ..

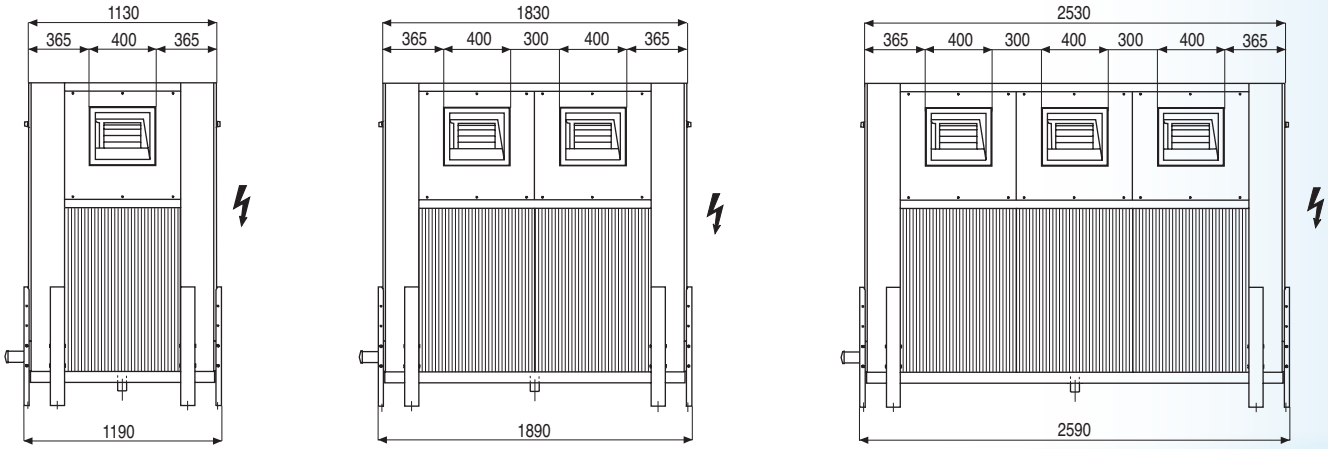


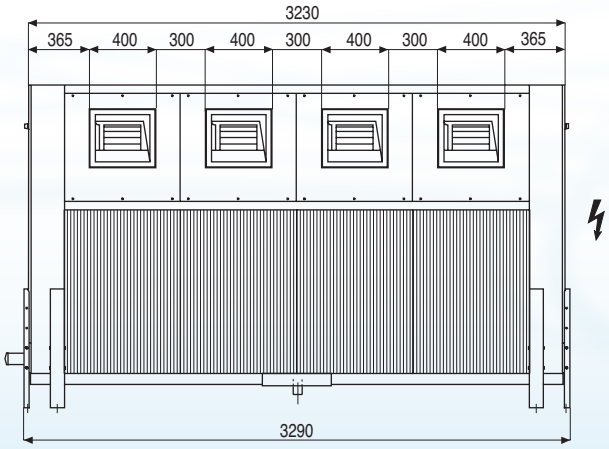


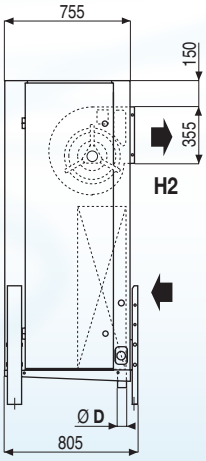


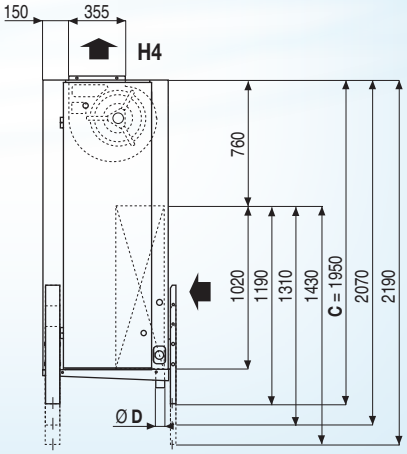

## NW .. A. R (Axial fans) — 6 mm

| | | | NW ... R | 12 A1 | 14 A1 | 25 A2 | 30 A2 | 45 A3 | 60 A4 |
|---|---|---|---|---|---|---|---|---|---|
| **0 Pa** (1) R404A | Capacity | **DT1 = 8K - SC 2** (2) | **kW** | **13,18** | **15,50** | **26,84** | **31,47** | **47,40** | **63,44** |
| | Air flow | | **$m^3/h$** | 8200 | 7900 | 16400 | 15800 | 23700 | 31600 |
| | Air throw (3) | | **m** | 19 | 18 | 22 | 21 | 26 | 30 |
| **100 Pa** (1) R404A | Capacity | **DT1 = 8K - SC 2** (2) | **kW** | **11,43** | **13,08** | **23,21** | **26,56** | **40,10** | **53,43** |
| | Air flow | | **$m^3/h$** | 6350 | 6050 | 12700 | 12100 | 18150 | 24200 |
| | Air throw (3) | | **m** | 15 | 14 | 17 | 16 | 20 | 23 |
| Surface | | | **$m^2$** | 47 | 63 | 94 | 125 | 188 | 251 |
| Circuit volume | | | **$dm^3$** | 14 | 19 | 26 | 35 | 52 | 68 |
| Net weight | | | **kg** | 180 | 195 | 280 | 305 | 420 | 530 |
| Connections | Inlet | | **Ø** | 5/8" | 5/8" | 7/8" | 7/8" | 1 1/8" | 1 3/8" |
| | Outlet | | **Ø** | 1 3/8" | 1 3/8" | 1 5/8" | 1 5/8" | 2 1/8" | 2 1/8" |

## NW .. A. L (Axial fans) — 9 mm

| | | | NW ... L | 9 A1 | 11 A1 | 20 A2 | 24 A2 | 36 A3 | 49 A4 |
|---|---|---|---|---|---|---|---|---|---|
| **0 Pa** (1) R404A | Capacity | **DT1 = 8K - SC 2** (2) | **kW** | **9,96** | **12,14** | **20,33** | **24,79** | **37,57** | **50,18** |
| | Air flow | | **$m^3/h$** | 9350 | 9050 | 18700 | 18100 | 27150 | 36200 |
| | Air throw (3) | | **m** | 21 | 21 | 25 | 24 | 29 | 34 |
| **100 Pa** (1) R404A | Capacity | **DT1 = 8K - SC 2** (2) | **kW** | **8,80** | **10,64** | **18,07** | **21,70** | **32,81** | **43,89** |
| | Air flow | | **$m^3/h$** | 7500 | 7200 | 15000 | 14400 | 21600 | 28800 |
| | Air throw (3) | | **m** | 17 | 16 | 20 | 19 | 23 | 27 |
| Surface | | | **$m^2$** | 41 | 54 | 82 | 109 | 163 | 218 |
| Circuit volume | | | **$dm^3$** | 18 | 24 | 34 | 46 | 67 | 88 |
| Net weight | | | **kg** | 185 | 205 | 295 | 325 | 445 | 565 |
| Connections | Inlet | | **Ø** | 5/8" | 5/8" | 5/8" | 7/8" | 7/8" | 1 1/8" |
| | Outlet | | **Ø** | 1 1/8" | 1 1/8" | 1 3/8" | 1 5/8" | 2 1/8" | 2 1/8" |

## NW .. A. M (Axial fans) — 12 mm

| | | | NW ... M | 9 A1 | 11 A1 | 19 A2 | 23 A2 | 34 A3 | 47 A4 |
|---|---|---|---|---|---|---|---|---|---|
| **0 Pa** (1) R404A | Capacity | **DT1 = 8K - SC 2** (2) | **kW** | **8,83** | **10,91** | **18,04** | **22,25** | **33,62** | **44,98** |
| | Air flow | | **$m^3/h$** | 9700 | 9400 | 19400 | 18800 | 28200 | 37600 |
| | Air throw (3) | | **m** | 22 | 21 | 26 | 25 | 30 | 34 |
| **100 Pa** (1) R404A | Capacity | **DT1 = 8K - SC 2** (2) | **kW** | **7,86** | **9,58** | **16,01** | **19,52** | **29,42** | **39,40** |
| | Air flow | | **$m^3/h$** | 7800 | 7500 | 15600 | 15000 | 22500 | 30000 |
| | Air throw (3) | | **m** | 17 | 17 | 21 | 20 | 24 | 27 |
| Surface | | | **$m^2$** | 32 | 43 | 63 | 84 | 126 | 169 |
| Circuit volume | | | **$dm^3$** | 18 | 24 | 34 | 46 | 67 | 88 |
| Net weight | | | **kg** | 185 | 200 | 290 | 320 | 435 | 555 |
| Connections | Inlet | | **Ø** | 5/8" | 5/8" | 5/8" | 7/8" | 7/8" | 1 1/8" |
| | Outlet | | **Ø** | 1 1/8" | 1 1/8" | 1 3/8" | 1 5/8" | 1 5/8" | 2 1/8" |

| | | | NW ... | | | | | | |
|---|---|---|---|---|---|---|---|---|---|
| Acoustic | **Lp 4m** (4) | | **dB(A)** | 52 | 52 | 55 | 55 | 57 | 58 |
| | **Lw** | | **dB(A)** | 82 | 82 | 85 | 85 | 87 | 88 |
| Fan 1,500 rpm. | **Ø 560 mm** | 400 V/3/50 Hz | **Nb** | 1 | 1 | 2 | 2 | 3 | 4 |
| | | | **kW/u** | 1,25 | 1,25 | 1,25 | 1,25 | 1,25 | 1,25 |
| | | | **A max/u** | 2,6 | 2,6 | 2,6 | 2,6 | 2,6 | 2,6 |
| Electric defrost **E1U** (5) | Ω | 230-400 V/3/50 Hz | **Nb** | 4 + 2 | 7 + 2 | 4 + 2 | 7 + 2 | 7 + 2 | 7 + 2 |
| | | | **W total** | 3900 | 5850 | 6600 | 9900 | 14400 | 22500 |
| | | | **A total** | 9,8/5,6 | 14,7/8,4 | 16,6/9,5 | 24,9/14,3 | 36,1/20,8 | 56,5/32,5 |

*(1) Additional air pressure available in Pascal.*
*(2) See page 10.*
*(3) Residual air speed: 0.25 m/s, in compliance with standard.*
*(4) Average sound pressure level in dB(A) measured at 4 m, at fan height, in direct line of sight on a reflective surface, given for information only.*
*(5) Electric defrost option.*

| WCO | CO2 | E1U | HGT | DAE | ECK | RVK | ECB |
|---|---|---|---|---|---|---|---|
| +1 | - | O | O | O | O | O | O |

## NW .. C. R (Centrifugal fans) — 6 mm

| | | | NW ... R | 12 C1 | 14 C1 | 24 C2 | 28 C2 | 43 C3 | 58 C4 |
|---|---|---|---|---|---|---|---|---|---|
| **200 Pa** (1) R404A | Capacity | DT1 = 8K - SC 2 (2) | kW | **10,96** | **12,59** | **22,20** | **25,49** | **38,46** | **51,45** |
| | Air flow | | $m^3/h$ | 5900 | 5700 | 11800 | 11400 | 17100 | 22800 |
| | Air throw (3) | | m | 18 | 18 | 22 | 21 | 25 | 28 |
| Surface | | | $m^2$ | 47 | 63 | 94 | 125 | 188 | 251 |
| Circuit volume | | | $dm^3$ | 14 | 19 | 26 | 35 | 52 | 68 |
| Net weight | | | kg | 180 | 195 | 280 | 305 | 420 | 530 |
| Connections | Inlet | | Ø | 5/8” | 5/8” | 7/8” | 7/8” | 1 1/8” | 1 3/8” |
| | Outlet | | Ø | 1 1/8” | 1 3/8” | 1 5/8” | 1 5/8” | 2 1/8” | 2 1/8” |

## NW .. C. L (Centrifugal fans) — 9 mm

| | | | NW ... L | 9 C1 | 10 C1 | 18 C2 | 22 C2 | 33 C3 | 44 C4 |
|---|---|---|---|---|---|---|---|---|---|
| **200 Pa** (1) R404A | Capacity | DT1 = 8K - SC 2 (2) | kW | **7,98** | **9,58** | **16,28** | **19,48** | **29,23** | **39,06** |
| | Air flow | | $m^3/h$ | 6250 | 6050 | 12500 | 12100 | 18150 | 24200 |
| | Air throw (3) | | m | 19 | 18 | 23 | 22 | 26 | 29 |
| Surface | | | $m^2$ | 41 | 54 | 82 | 109 | 163 | 218 |
| Circuit volume | | | $dm^3$ | 18 | 24 | 34 | 46 | 67 | 88 |
| Net weight | | | kg | 185 | 205 | 295 | 325 | 445 | 565 |
| Connections | Inlet | | Ø | 5/8” | 5/8” | 5/8” | 7/8” | 7/8” | 7/8” |
| | Outlet | | Ø | 1 1/8” | 1 1/8” | 1 3/8” | 1 5/8” | 1 5/8” | 2 1/8” |

## NW .. C. M (Centrifugal fans) — 12 mm

| | | | NW ... M | 8 C1 | 10 C1 | 17 C2 | 21 C2 | 31 C3 | 42 C4 |
|---|---|---|---|---|---|---|---|---|---|
| **200 Pa** (1) R404A | Capacity | DT1 = 8K - SC 2 (2) | kW | **7,02** | **8,54** | **14,29** | **17,37** | **26,16** | **34,97** |
| | Air flow | | $m^3/h$ | 6400 | 6200 | 12800 | 12400 | 18600 | 24800 |
| | Air throw (3) | | m | 19 | 19 | 23 | 23 | 26 | 30 |
| Surface | | | $m^2$ | 32 | 43 | 63 | 84 | 126 | 169 |
| Circuit volume | | | $dm^3$ | 18 | 24 | 34 | 46 | 67 | 88 |
| Net weight | | | kg | 185 | 200 | 290 | 320 | 435 | 555 |
| Connections | Inlet | | Ø | 5/8” | 5/8” | 5/8” | 7/8” | 7/8” | 7/8” |
| | Outlet | | Ø | 1 1/8” | 1 1/8” | 1 3/8” | 1 3/8” | 1 5/8” | 2 1/8” |

| | | | NW ... | | | | | | |
|---|---|---|---|---|---|---|---|---|---|
| Acoustic | **Lp 4m** (4) | | dB(A) | 48 | 48 | 51 | 51 | 53 | 54 |
| | **Lw** | | dB(A) | 78 | 78 | 81 | 81 | 83 | 84 |
| Turbine 1,000 rpm. | **12/12** | | Nb | 1 | 1 | 2 | 2 | 3 | 4 |
| | | 230-400 V/3/50 Hz | kW/u | 2,4 | 2,4 | 2,4 | 2,4 | 2,4 | 2,4 |
| | | | A max/u | 7,0/4,0 | 7,0/4,0 | 7,0/4,0 | 7,0/4,0 | 7,0/4,0 | 7,0/4,0 |
| Electric defrost **E1U** (5) | Ω | | Nb | 4 + 2 | 7 + 2 | 4 + 2 | 7 + 2 | 7 + 2 | 7 + 2 |
| | 230-400 V/3/50 Hz | | W total | 3900 | 5850 | 6600 | 9900 | 14400 | 22500 |
| | | | A total | 9,8/5,6 | 14,7/8,4 | 16,6/9,5 | 24,9/14,3 | 36,1/20,8 | 56,5/32,5 |

*(1) Additional air pressure available in Pascal.*
*(2) See page 10.*
*(3) Residual air speed: 0.25 m/s, in compliance with standard.*
*(4) Average sound pressure level in dB(A) measured at 4 m, at fan height, in direct line of sight on a reflective surface, given for information only.*
*(5) Electric defrost option.*

| WCO | CO2 | E1U | HGT | DAE | ECK | RVK | ECB |
|---|---|---|---|---|---|---|---|
| | - | O | O | O | O | - | O |

## NW .. A. C (Axial fans) — 6 mm

| | | | NW ... C | 12 A1 | 14 A1 | 25 A2 | 29 A2 | 45 A3 | 60 A4 |
|---|---|---|---|---|---|---|---|---|---|
| 0 Pa (1) R404A | Capacity | DT1 = 7K - SC 3 (2) | kW | 10,16 | 12,02 | 20,81 | 24,49 | 35,80 | 48,03 |
| | | DT1 = 6K - SC 4 (2) | kW | 7,92 | 9,46 | 16,34 | 19,36 | 27,97 | 37,57 |
| | Air flow | | $m^3/h$ | 8200 | 7900 | 16400 | 15800 | 23700 | 31600 |
| | Air throw (3) | | m | 19 | 18 | 22 | 21 | 26 | 30 |
| 100 Pa (1) R404A | Capacity | DT1 = 7K - SC 3 (2) | kW | 8,83 | 10,20 | 18,02 | 20,73 | 30,74 | 41,20 |
| | | DT1 = 6K - SC 4 (2) | kW | 6,94 | 8,07 | 14,22 | 16,47 | 24,31 | 32,50 |
| | Air flow | | $m^3/h$ | 6350 | 6050 | 12700 | 12100 | 18150 | 24200 |
| | Air throw (3) | | m | 15 | 14 | 17 | 16 | 20 | 23 |
| Surface | | | $m^2$ | 47 | 63 | 94 | 125 | 188 | 251 |
| Circuit volume | | | $dm^3$ | 14 | 19 | 26 | 35 | 52 | 68 |
| Net weight | | | kg | 180 | 195 | 280 | 305 | 420 | 530 |
| Connections | Inlet | | Ø | 5/8" | 7/8" | 1 1/8" | 1 1/8" | 1 1/8" | 1 3/8" |
| | Outlet | | Ø | 1 3/8" | 1 5/8" | 2 1/8" | 2 1/8" | 2 1/8" | 2 5/8" |

## NW .. A. S (Axial fans) — 9 mm

| | | | NW ... S | 9 A1 | 11 A1 | 19 A2 | 24 A2 | 36 A3 | 48 A4 |
|---|---|---|---|---|---|---|---|---|---|
| 0 Pa (1) R404A | Capacity | DT1 = 7K - SC 3 (2) | kW | 7,23 | 8,89 | 14,58 | 18,29 | 27,66 | 37,13 |
| | | DT1 = 6K - SC 4 (2) | kW | 5,47 | 6,75 | 11,07 | 13,99 | 21,21 | 28,50 |
| | Air flow | | $m^3/h$ | 9350 | 9050 | 18700 | 18100 | 27150 | 36200 |
| | Air throw (3) | | m | 21 | 21 | 25 | 24 | 29 | 34 |
| 100 Pa (1) R404A | Capacity | DT1 = 7K - SC 3 (2) | kW | 6,46 | 7,85 | 12,95 | 16,13 | 24,32 | 32,69 |
| | | DT1 = 6K - SC 4 (2) | kW | 4,92 | 6,01 | 9,88 | 12,42 | 18,76 | 25,25 |
| | Air flow | | $m^3/h$ | 7500 | 7200 | 15000 | 14400 | 21600 | 28800 |
| | Air throw (3) | | m | 17 | 16 | 20 | 19 | 23 | 27 |
| Surface | | | $m^2$ | 41 | 54 | 82 | 109 | 163 | 218 |
| Circuit volume | | | $dm^3$ | 18 | 24 | 34 | 46 | 67 | 88 |
| Net weight | | | kg | 185 | 205 | 295 | 325 | 445 | 565 |
| Connections | Inlet | | Ø | 5/8" | 5/8" | 7/8" | 7/8" | 1 1/8" | 1 1/8" |
| | Outlet | | Ø | 1 3/8" | 1 3/8" | 1 5/8" | 2 1/8" | 2 1/8" | 2 5/8" |

## NW .. A. T (Axial fans) — 12 mm

| | | | NW ... T | 9 A1 | 11 A1 | 18 A2 | 22 A2 | 34 A3 | 46 A4 |
|---|---|---|---|---|---|---|---|---|---|
| 0 Pa (1) R404A | Capacity | DT1 = 7K - SC 3 (2) | kW | 6,27 | 8,00 | 12,89 | 16,45 | 24,81 | 33,36 |
| | | DT1 = 6K - SC 4 (2) | kW | 4,75 | 6,11 | 9,82 | 12,64 | 19,10 | 25,71 |
| | Air flow | | $m^3/h$ | 9700 | 9400 | 19400 | 18800 | 28200 | 37600 |
| | Air throw (3) | | m | 22 | 21 | 26 | 25 | 30 | 34 |
| 100 Pa (1) R404A | Capacity | DT1 = 7K - SC 3 (2) | kW | 5,58 | 7,08 | 11,46 | 14,51 | 21,85 | 29,42 |
| | | DT1 = 6K - SC 4 (2) | kW | 4,24 | 5,44 | 8,77 | 11,22 | 16,92 | 22,79 |
| | Air flow | | $m^3/h$ | 7800 | 7500 | 15600 | 15000 | 22500 | 30000 |
| | Air throw (3) | | m | 17 | 17 | 21 | 20 | 24 | 27 |
| Surface | | | $m^2$ | 32 | 43 | 63 | 84 | 126 | 169 |
| Circuit volume | | | $dm^3$ | 18 | 24 | 34 | 46 | 67 | 88 |
| Net weight | | | kg | 185 | 200 | 290 | 320 | 435 | 555 |
| Connections | Inlet | | Ø | 5/8" | 5/8" | 7/8" | 7/8" | 1 1/8" | 1 1/8" |
| | Outlet | | Ø | 1 3/8" | 1 3/8" | 1 5/8" | 1 5/8" | 2 1/8" | 2 1/8" |

| | | | NW ... | | | | | | |
|---|---|---|---|---|---|---|---|---|---|
| Acoustic | Lp 4m (4) | | dB(A) | 52 | 52 | 55 | 55 | 57 | 58 |
| | Lw | | dB(A) | 82 | 82 | 85 | 85 | 87 | 88 |
| Fan 1,500 rpm. | Ø 560 mm | 400 V/3/50 Hz | Nb | 1 | 1 | 2 | 2 | 3 | 4 |
| | | | kW/u | 1,25 | 1,25 | 1,25 | 1,25 | 1,25 | 1,25 |
| | | | A max/u | 2,6 | 2,6 | 2,6 | 2,6 | 2,6 | 2,6 |
| Electric defrost E1U (5) | Ω | | Nb | 7 + 2 | 10 + 2 | 7 + 2 | 10 + 2 | 10 + 2 | 10 + 2 |
| | 230-400 V/3/50 Hz | | W total | 5850 | 7800 | 9900 | 13200 | 19200 | 30000 |
| | | | A total | 14,7/8,4 | 19,6/11,3 | 24,9/14,3 | 33,1/19,1 | 48,2/27,7 | 75,3/43,3 |

*(1) Additional air pressure available in Pascal.*
*(2) See page 10.*
*(3) Residual air speed: 0.25 m/s, in compliance with standard.*
*(4) Average sound pressure level in dB(A) measured at 4 m, at fan height, in direct line of sight on a reflective surface, given for information only.*
*(5) Electric defrost option.*

| WCO | CO2 | E1U | HGT | DAE | ECK | RVK | ECB |
|---|---|---|---|---|---|---|---|
| - | | - | O | O | - | O | O |

HEATCRAFT™
Worldwide Refrigeration

EUROVENT CERTIFIED PERFORMANCE
www.eurovent-certification.com

# Blast freezing tunnel unit cooler

## NF industrial range

- High capacity of up to 110 kW.
- The high air flow speed guarantees extremely rapid refrigeration of food.
- Large heat-exchanger surface and large fin spacing of 9 mm.

35 110 kW

Heatcraft reserves itself the right to make changes at any time without preliminary notice - Photos non-contractual

FRIGA-BOHN

HYFRA® PEDIA

HK® REFRIGERATION

# NF - Industrial blast freezing tunnel unit cooler

## Market segments

*FCS Food processing*

## Designation

**NFT** (1) **280** (2)

(1) Fin spacing: **NFT** = 9 mm
(2) Model

## Description

### Ventilation

- Fan delivered separately and installed above the coil.
- Fans Ø 710 mm 230/400 V/3/50 Hz, IP 55, class F.

### Coil

- Coil with staggered copper tubes and embosed aluminium fins.
- Fin spacing of 9 mm.

### Defrost

- Drain pan under the entire heat-exchanger.
- Electric defrost.

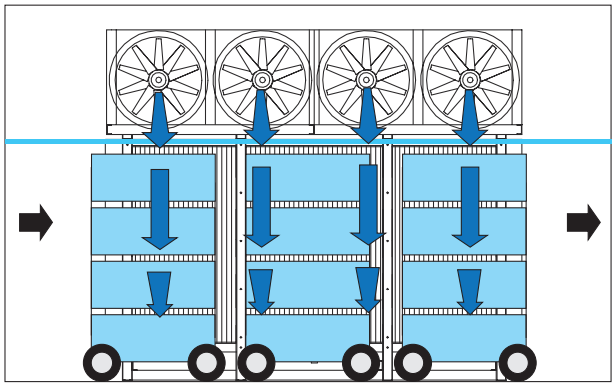

*Deep-freeze tunnel principle with an NF*

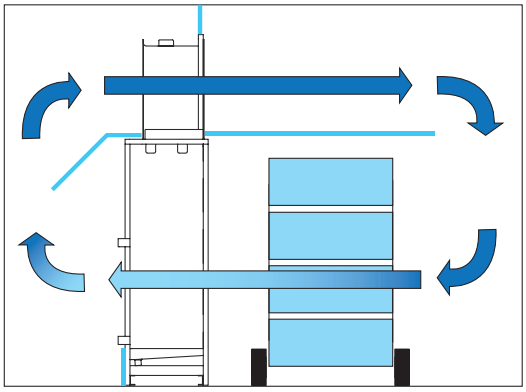

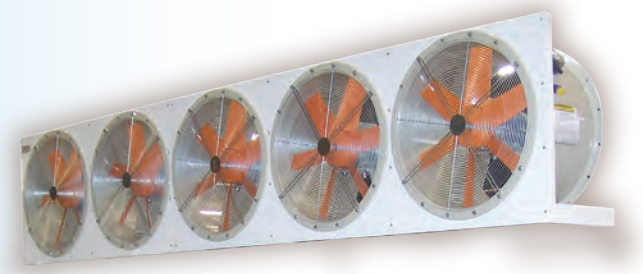

## Certifications

## Advantages

### Installation

Due to the unit height, the NF is supplied in 2 parts:
- a coil, frame, drain pan and heater assembly,
- a fans assembly.

### Servicing / Maintenance

Inclination of the drain pan towards the largely dimensioned drain pipe (Ø 1 1/2" G) to avoid accumulation of soiling and render cleaning easier.

## Options

| Kit | Factory |
|---|---|
| | CO2 |
| | ECB |

### Coil

R744 optimization (please contact us for details)

### Miscellaneous

Full crate packaging.

### Other options

Please contact us for details.

## NFT ... - 100 Pa (1) 9 mm

| | | NFT ... | 280 | 401 | 507 | 676 | 802 |
|---|---|---|---|---|---|---|---|
| Capacity R404A | DT1 = 7K - SC 3 (2) | kW | 43.5 | 64.3 | 82.9 | 109.3 | 129.6 |
| | DT1 = 6K - SC 4 (2) | kW | 33.6 | 49.7 | 64.1 | 84.7 | 100.1 |
| Surface | | $m^2$ | 308 | 442 | 560 | 746 | 884 |
| Circuit volume | | $dm^3$ | 116.6 | 165.5 | 208.4 | 276.3 | 326.7 |
| Fan* Ø 710 mm 1500 r.p.m. | Air flow | $m^3/h$ | 31800 | 46500 | 60400 | 78500 | 94200 |
| | Air throw (3) | m | 41 | 49 | 56 | 64 | 71 |
| | | Nb | 2 | 3 | 4 | 5 | 6 |
| Electric defrost | Ω | Nb | 19 + 2 | 19 + 2 | 19 + 2 | 19 + 2 | 19 + 2 |
| | 400 V/3/50 Hz | W total | 27300 | 47250 | 59850 | 79800 | 92400 |
| | | A total | 39.6 | 68.5 | 86.7 | 115.7 | 133.9 |
| Net weight | | kg | 600 | 830 | 1060 | 1330 | 1560 |
| Connections | Inlet | Ø (4) | 1 3/8" | 2 x 1 1/8" | 2 x 1 3/8" | 2 x 1 3/8" | 2 x 1 3/8" |
| | Outlet | Ø (5) | 2 5/8" | 2 x 2 1/8" | 2 x 2 5/8" | 2 x 2 5/8" | 2 x 3 1/8" |
| Options | | CO2 | | | | | |
| | | ECB | O | O | O | O | O |

** 2.2 kW max - 230 V/3/50 Hz : 8.5 A max - 400 V/3/50 Hz : 4.9 A max. (6).*

*(1) Additional air pressure available in Pascal.*
*(2) See page 10.*
*(3) Residual air speed: 0.25 m/s, in compliance with standard.*
*(4) Distributor: Male to be brazed.*
*(5) Ø: Male to be brazed.*
*(6) Setting of overload protection levels.*

## Sound power per fan Lw

| | 63 Hz | 125 Hz | 250 Hz | 500 Hz | 1000 Hz | 2000 Hz | 4000 Hz | 8000 Hz |
|---|---|---|---|---|---|---|---|---|
| Lw - dB(A) | 58 | 78 | 86 | 91 | 93 | 90 | 83 | 72 |

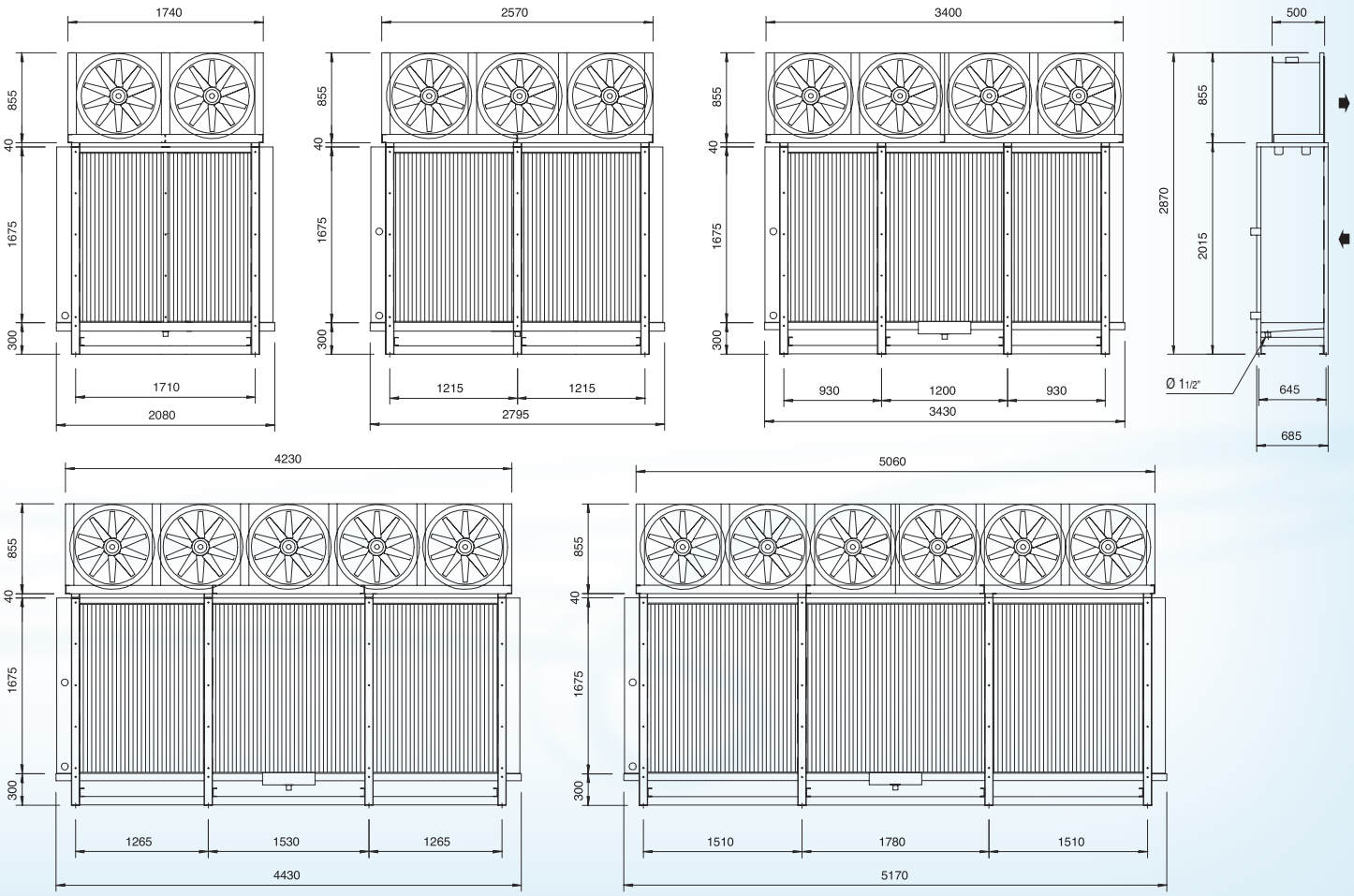

HEATCRAFT™
Worldwide Refrigeration

# Centrifugal unit cooler

E Solutions
Efficiency • Environment

## NC industrial range

- The NC range is designed for use in cold rooms or work areas.
- Centrifugal motors delivering an available pressure of up to 200 Pa.
- Wide choice of options for industrial applications.
- 4 blowing positions possible.
- Floor or ceiling installation.

Heatcraft reserves itself the right to make changes at any time without preliminary notice - Photos non-contractual

*Natural fluids: Glycol water*

5 ▁▂▃▄▅ 80 kW

FRIGA-BOHN

HYFRA® PEDIA

HK® REFRIGERATION

## Market segments

*FSM Hard Discount - Supermarkets - Hypermarkets*
*FCS Refrigerated storage and transit stocking - Dispatch centres - Food processing - Canteen kitchens*

## Designation

**NCP**(1) **6294**(2) **H3**(3)

(1) Fin spacing: **NCP** = 4,00 mm - **NCN** = 6,00 mm
(2) Model
(3) Air direction

## Description

### Casing

- Compact and sturdy, it is made of white enamelled galvanized steel.
- External aluminium drain pan.
- Intermediate aluminium drain pan to reduce the condensation effect.

### Ventilation

- Direct-drive, "twin inlet" centrifugal type fans.
- Pressure of up to 200 Pascals available.
- Rotation speed 1,000 rpm.
- Enclosed motors with internal thermal overload protection, IP 54 class F, designed for operating conditions between -40 °C and +70 °C.

### Coil

- The coils of NC unit coolers are designed with aluminium fins spaced at 4.00 mm (model P) or 6.00 mm (model N) crimped to staggered copper tubes Ø1/2" (12.7 mm).

## Advantages

### Installation

The design concept enables floor or ceiling installation and offers easy access to all components.

4 blowing positions available (to be indicated when ordering).

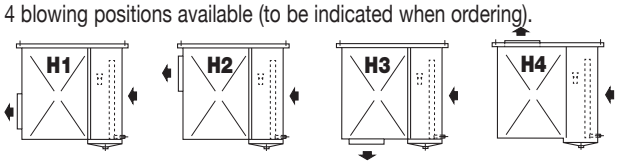


Later modification is particularly easy.

Possibility to supply an optional speed controller factory fitted or in kit form (**VVU/VVK**) for optimization of the "power/noise level" ratio.

### Servicing / Maintenance

Direct-drive centrifugal fans require no specific maintenance.

The external aluminium drain pan may be easily removed.

Easy access to the distributor.

## Application of options

**Application requiring installation of a textile duct**

**VGT option:**
Circular shell for connection of textile ducting (ducts not provided).

**Air intake filter and ducting**

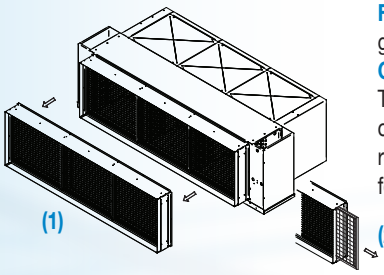


**FLA option:**
gravimetric air intake filter.
**CFA option (1) :**
The enclosure enables connection of an air intake duct; the filter may be removed from the side of the enclosure for easy servicing (2).

**Adapted power and noise level, thermal insulation**

**VVU / VVK option:**
modulated voltage speed controller. Guaranteed acoustic comfort at low and medium speeds for employees in the vicinity.

**IPH option:**
10 mm thick insulation to help reduce the sheeting vibration and provide thermal insulation of the unit to limit the effect of condensation.

## Certifications

*Range not concerned by Eurovent certification.*

## Options

| Kit | Factory | |
|---|---|---|
| | | **Ventilation** |
| | CMU | Motors factory wired. |
| VGT | | Textile duct shell. |
| VPS | | Blower deflector vanes (please contact us for details). |
| VVK | VVU | Speed controller. |
| | | **Coil** |
| | BAE | Protection of fins. |
| | WCO | Glycol water, coolant (please contact us for details). |
| | | **Defrost** |
| | E1U | Light electric defrost. |
| | HGT | Hot gas (coil and drain pan). |
| | | **Casing** |
| | IPH | Noise Insulation (M1*). |
| | FLA | Intake filters (M1*). |
| | CFA | Air intake filter housing (M1*). |
| | ECB | Full crate packaging. |

** M1: Non-flammable.*

## NCP

4,00 mm

| | | | NCP ... | 831 | 1622 | 1591 | 2393 | 3162 | 4693 | 6294 |
|---|---|---|---|---|---|---|---|---|---|---|
| **100 Pa** (1) R404A | Capacity (2) | **DT1 = 10K - SC 1** | **kW** | **10,85** | **21,05** | **21,05** | **31,01** | **41,84** | **62,15** | **82,25** |
| | | **DT1 = 8K - SC 2** | **kW** | **7,11** | **13,85** | **13,67** | **20,41** | **27,28** | **40,62** | **53,72** |
| | Air flow | | **$m^3/h$** | 3200 | 6300 | 7100 | 9300 | 14100 | 21000 | 27800 |
| **150 Pa** (1) R404A | Capacity (2) | **DT1 = 10K - SC 1** | **kW** | **9,58** | **18,59** | **20,08** | **27,31** | **39,89** | **59,27** | **78,46** |
| | | **DT1 = 8K - SC 2** | **kW** | **6,32** | **12,26** | **13,06** | **18,08** | **26,11** | **38,82** | **51,35** |
| | Air flow | | **$m^3/h$** | 2650 | 5200 | 6550 | 7650 | 13000 | 19350 | 25600 |
| **200 Pa** (1) R404A | Capacity (2) | **DT1 = 10K - SC 1** | **kW** | **-** | **-** | **18,79** | **-** | **37,41** | **55,61** | **73,48** |
| | | **DT1 = 8K - SC 2** | **kW** | **-** | **-** | **12,27** | **-** | **24,57** | **36,55** | **48,28** |
| | Air flow | | **$m^3/h$** | - | - | 5900 | - | 11700 | 17400 | 23000 |
| Surface | | | **$m^2$** | 50,5 | 93,1 | 80,8 | 135,6 | 152,6 | 224,4 | 296,2 |
| Circuit volume | | | **$dm^3$** | 9,2 | 16,2 | 14,3 | 23,3 | 26,2 | 38,0 | 49,7 |
| Turbine | | | **Nb** | 1 | 2 | 1 | 3 | 2 | 3 | 4 |
| | 230V/1/50 Hz | | **kW/u** | 0,75 | 0,75 | - | 0,75 | - | - | - |
| | | | **A max/u** (3) | 4 | 4 | - | 4 | - | - | - |
| | 230-400V/3/50 Hz | | **kW/u** | - | - | 2,4 | - | 2,4 | 2,4 | 2,4 |
| | | | **A max/u** (3) | - | - | 7/4 | - | 7/4 | 7/4 | 7/4 |
| Acoustic | **Lp 4 m** (4) | | **dB(A)** | 46 | 49 | 49 | 51 | 52 | 54 | 55 |
| | **Lw** | | **dB(A)** | 76 | 79 | 79 | 81 | 82 | 84 | 85 |
| Net weight | | | **kg** | 85 | 145 | 120 | 190 | 210 | 310 | 470 |
| Dimensions | **A** | | **mm** | 760 | 760 | 870 | 765 | 875 | 880 | 880 |
| | **B** | | **mm** | 1170 | 1810 | 1490 | 2450 | 2450 | 3410 | 4370 |
| | **C** | | **mm** | 290 | 290 | 342 | 290 | 342 | 342 | 342 |
| | **D** | | **mm** | 133 | 133 | 183 | 133 | 183 | 183 | 183 |
| | **E** | | **mm** | 228 | 228 | 357 | 228 | 357 | 357 | 357 |
| | **F** | | **mm** | 334 | 334 | 396 | 334 | 396 | 396 | 396 |
| | **G** | | **mm** | - | 306 | - | 306 | 564 | 564 | 564 |
| | **X** | | **mm** | 790 | 1430 | 1110 | 2070 | 2070 | 3030 | 3990 |
| | **Y** | | **mm** | - | - | - | - | - | - | 1995 |
| | **Ø R** | | **Ø** | 1” | 1” | 1” | 1 1/2” | 1 1/2” | 1 1/2” | 1 1/2” |
| Connections | Inlet | | **Ø** | 5/8” | 5/8” | 7/8” | 7/8” | 7/8” | 1 1/8” | 1 1/8” |
| | Outlet | | **Ø** | 7/8” | 1 1/8” | 1 1/8” | 1 3/8” | 1 3/8” | 1 5/8” | 2 1/8” |

*(1) Additional pressure available in Pascals.*
*(2) See page 10.*
*(3) Setting of overload protection levels. For air temperatures “ti” other than +20 °C, multiply the currents in relation to 293/(273 + “ti”) in order to obtain an approximate current value after the chamber temperature is attained.*
*(4) Average sound pressure level in dB(A) measured at 4 m, at turbine height, in direct line of sight on a reflective surface, given for information only.*

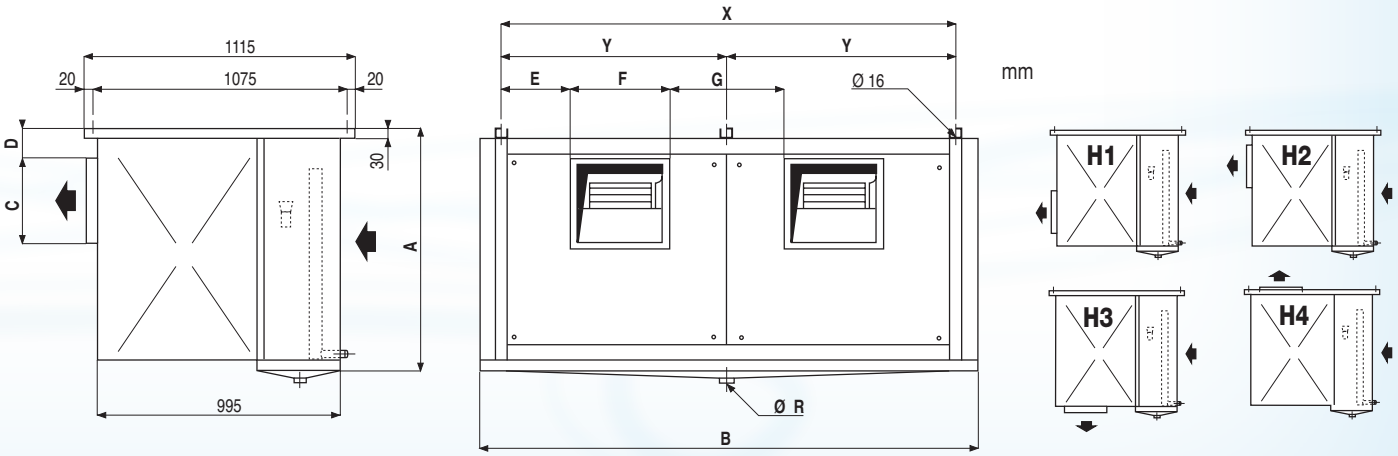


| CMU | VGT | VPS | VVK | VVU* | BAE | WCO | E1U | HGT | IPH | FLA | CFA | ECB |
|---|---|---|---|---|---|---|---|---|---|---|---|---|
| O | O | +👤 | O | O | O | +👤 | - | - | O | O | O | O |

** Only for turbines : 230V/1/50Hz*

## NCN

**6,00 mm**

| | | | NCN ... | 831 | 1622 | 1591 | 2393 | 3162 | 4693 | 6294 |
|---|---|---|---|---|---|---|---|---|---|---|
| **100 Pa** (1) R404A | Capacity (2) | **DT1 = 8K - SC 2** | **kW** | **6,17** | **12,01** | **12,19** | **17,72** | **24,09** | **35,84** | **47,45** |
| | Air flow | | **m³/h** | 3300 | 6500 | 7400 | 9600 | 14700 | 21900 | 29000 |
| **150 Pa** (1) R404A | Capacity (2) | **DT1 = 8K - SC 2** | **kW** | **5,49** | **10,66** | **11,61** | **15,68** | **22,90** | **34,09** | **45,08** |
| | Air flow | | **m³/h** | 2750 | 5400 | 6800 | 7950 | 13500 | 20100 | 26600 |
| **200 Pa** (1) R404A | Capacity (2) | **DT1 = 8K - SC 2** | **kW** | **-** | **-** | **10,94** | **-** | **21,55** | **32,12** | **42,33** |
| | Air flow | | **m³/h** | - | - | 6150 | - | 12200 | 18150 | 24000 |
| Surface | | | **m²** | 34,7 | 64,0 | 55,5 | 93,2 | 104,9 | 154,2 | 203,5 |
| Circuit volume | | | **dm³** | 9,2 | 16,2 | 14,3 | 23,3 | 26,2 | 38,0 | 49,7 |
| Turbine | | | **Nb** | 1 | 2 | 1 | 3 | 2 | 3 | 4 |
| | 230V/1/50 Hz | | **kW/u** | 0,75 | 0,75 | - | 0,75 | - | - | - |
| | | | **A max/u** (3) | 4 | 4 | - | 4 | - | - | - |
| | 230-400V/3/50 Hz | | **kW/u** | - | - | 2,4 | - | 2,4 | 2,4 | 2,4 |
| | | | **A max/u** (3) | - | - | 7/4 | - | 7/4 | 7/4 | 7/4 |
| Acoustic | **Lp 4 m** (4) | | **dB(A)** | 46 | 49 | 49 | 51 | 52 | 54 | 55 |
| | **Lw** | | **dB(A)** | 76 | 79 | 79 | 81 | 82 | 84 | 85 |
| Electric defrost **E1U** (5) | Ω | | **Nb** | 5 +1 | 5 +1 | 5 +1 | 5 +1 | 5 +1 | 5 +1 | 5 +1 |
| | 230-400V/3/50 Hz | | **W total** | 3900 | 6600 | 5400 | 9600 | 9600 | 17100 | 22800 |
| | | | **A total** | 9,8/5,6 | 16,6/9,5 | 13,6/7,8 | 24,1/13,9 | 24,1/13,9 | 42,9/24,7 | 57,2/32,9 |
| Net weight | | | **kg** | 85 | 145 | 120 | 190 | 210 | 310 | 470 |
| Dimensions | **A** | | **mm** | 760 | 760 | 870 | 765 | 875 | 880 | 880 |
| | **B** | | **mm** | 1170 | 1810 | 1490 | 2450 | 2450 | 3410 | 4370 |
| | **C** | | **mm** | 290 | 290 | 342 | 290 | 342 | 342 | 342 |
| | **D** | | **mm** | 133 | 133 | 183 | 133 | 183 | 183 | 183 |
| | **E** | | **mm** | 228 | 228 | 357 | 228 | 357 | 357 | 357 |
| | **F** | | **mm** | 334 | 334 | 396 | 334 | 396 | 396 | 396 |
| | **G** | | **mm** | - | 306 | - | 306 | 564 | 564 | 564 |
| | **X** | | **mm** | 790 | 1430 | 1110 | 2070 | 2070 | 3030 | 3990 |
| | **Y** | | **mm** | - | - | - | - | - | - | 1995 |
| | **Ø R** | | **Ø** | 1” | 1” | 1” | 1 1/2” | 1 1/2” | 1 1/2” | 1 1/2” |
| Connections | Inlet | | **Ø** | 5/8” | 5/8” | 5/8” | 7/8” | 7/8” | 1 1/8” | 1 1/8” |
| | Outlet | | **Ø** | 7/8” | 1 1/8” | 1 1/8” | 1 3/8” | 1 3/8” | 1 5/8” | 2 1/8” |

*(1) Additional pressure available in Pascals.*
*(2) See page 10.*
*(3) Setting of overload protection levels. For air temperatures “ti” other than +20 °C, multiply the currents in relation to 293/(273 + “ti”) in order to obtain an approximate current value after the chamber temperature is attained.*
*(4) Average sound pressure level in dB(A) measured at 4 m, at turbine height, in direct line of sight on a reflective surface, given for information only.*
*(5) Electric defrost option.*

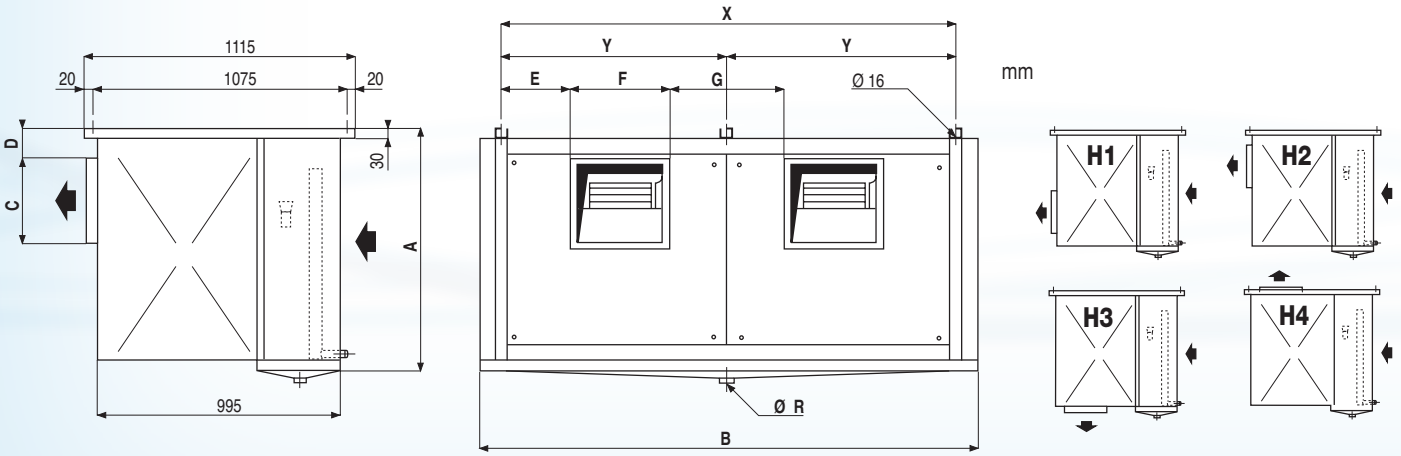


| CMU | VGT | VPS | VVK | VVU* | BAE | WCO | E1U | HGT | IPH | FLA | CFA | ECB |
|---|---|---|---|---|---|---|---|---|---|---|---|---|
| O | O | +👤 | O | O | O | +👤 | O | O | O | O | O | O |

** Only for turbines : 230V/1/50Hz*

## Technical characteristics obtained with speed controller VVU or VVK:

### VVU and VVK : 831 - 1622 - 2393

**VVU** Option with factory fitted speed controller.
**VVK** Speed controller kit shipped with the unit cooler chosen.

- Switching cabinet IP54.
- Single-phase electronic voltage regulator
- Potentiometer controller.
- One voltage regulator per fan.
- Setting of minimum voltage.
- Electrical wiring diagram.

### VVK : 1591 - 3162 - 4693 - 6294

**This option is in kit form shipped with the unit cooler chosen.**

- Electromechanical voltage regulator.
- Manual rotary switch.
- Five stepped rotation speeds.
- Electrical wiring diagram.

| 100 Pa (1) | | | NCP 831 | NCP 1622 | NCP 2393 | NCP 1591 | NCP 3162 | NCP 4693 | NCP 6294 | NCN 831 | NCN 1622 | NCN 2393 | NCN 1591 | NCN 3162 | NCN 4693 | NCN 6294 |
|---|---|---|---|---|---|---|---|---|---|---|---|---|---|---|---|---|
| Capacity (2) **DT1 = 10K SC 1** | High speed | **kW** | **10,85** | **21,05** | **31,01** | **21,05** | **41,84** | **62,15** | **82,25** | - | - | - | - | - | - | - |
| | Medium speed | **kW** | **10,16** | **19,69** | **28,89** | **19,93** | **39,56** | **58,80** | **77,73** | - | - | - | - | - | - | - |
| | Low speed | **kW** | **8,64** | **17,14** | **25,80** | **17,41** | **34,54** | **51,41** | **68,26** | - | - | - | - | - | - | - |
| Capacity (2) **DT1 = 8K SC 2** | High speed | **kW** | **7,11** | **13,85** | **20,41** | **13,67** | **27,28** | **40,62** | **53,72** | **6,17** | **12,01** | **17,72** | **12,19** | **24,09** | **35,84** | **47,45** |
| | Medium speed | **kW** | **6,69** | **12,98** | **19,06** | **12,95** | **25,89** | **38,59** | **50,96** | **5,83** | **11,34** | **16,69** | **11,56** | **22,82** | **34,21** | **45,32** |
| | Low speed | **kW** | **5,74** | **11,38** | **17,10** | **11,39** | **22,77** | **33,94** | **45,03** | **5,00** | **9,74** | **14,64** | **10,35** | **20,38** | **29,93** | **40,45** |
| Air flow | High speed | **$m^3/h$** | 3200 | 6300 | 9300 | 7100 | 14100 | 21000 | 27800 | 3300 | 6500 | 9600 | 7400 | 14700 | 21900 | 29000 |
| | Medium speed | **$m^3/h$** | 2890 | 5670 | 8340 | 6470 | 12840 | 19120 | 25310 | 2990 | 5890 | 8670 | 6680 | 13270 | 20050 | 26550 |
| | Low speed | **$m^3/h$** | 2270 | 4620 | 7060 | 5220 | 10310 | 15360 | 20540 | 2320 | 4570 | 6970 | 5450 | 10820 | 15730 | 21650 |
| Acoustic **Lp** 4 m (3) | High speed | **dB(A)** | 45 | 48 | 50 | 48 | 51 | 53 | 54 | 45 | 48 | 50 | 48 | 51 | 53 | 54 |
| | Medium speed | **dB(A)** | 41 | 44 | 46 | 45 | 48 | 50 | 51 | 41 | 44 | 46 | 45 | 48 | 50 | 51 |
| | Low speed | **dB(A)** | 33 | 36 | 38 | 41 | 44 | 46 | 47 | 33 | 36 | 38 | 41 | 44 | 46 | 47 |

| 150 Pa (1) | | | NCP 831 | NCP 1622 | NCP 2393 | NCP 1591 | NCP 3162 | NCP 4693 | NCP 6294 | NCN 831 | NCN 1622 | NCN 2393 | NCN 1591 | NCN 3162 | NCN 4693 | NCN 6294 |
|---|---|---|---|---|---|---|---|---|---|---|---|---|---|---|---|---|
| Capacity (2) **DT1 = 10K SC 1** | High speed | **kW** | **9,58** | **18,59** | **27,31** | **20,08** | **39,89** | **59,27** | **78,46** | - | - | - | - | - | - | - |
| | Medium speed | **kW** | **9,33** | **18,10** | **26,56** | **19,10** | **37,87** | **56,31** | **74,47** | - | - | - | - | - | - | - |
| | Low speed | **kW** | **7,99** | **15,96** | **24,09** | **17,09** | **33,96** | **50,61** | **66,81** | - | - | - | - | - | - | - |
| Capacity (2) **DT1 = 8K SC 2** | High speed | **kW** | **6,32** | **12,26** | **18,08** | **13,06** | **26,11** | **38,82** | **51,35** | **5,49** | **10,66** | **15,68** | **11,61** | **22,90** | **34,09** | **45,08** |
| | Medium speed | **kW** | **6,15** | **11,94** | **17,59** | **12,41** | **24,88** | **37,03** | **48,91** | **5,29** | **10,06** | **15,08** | **10,55** | **20,85** | **31,51** | **41,61** |
| | Low speed | **kW** | **5,32** | **10,59** | **16,02** | **11,18** | **22,42** | **33,43** | **44,11** | **4,27** | **8,45** | **12,66** | **8,97** | **17,43** | **26,34** | **34,68** |
| Air flow | High speed | **$m^3/h$** | 2650 | 5200 | 7650 | 6550 | 13000 | 19350 | 25600 | 2750 | 5400 | 7950 | 6800 | 13500 | 20100 | 26600 |
| | Medium speed | **$m^3/h$** | 2550 | 4990 | 7330 | 6020 | 11940 | 17790 | 23540 | 2380 | 4500 | 6680 | 6090 | 12180 | 18200 | 24140 |
| | Low speed | **$m^3/h$** | 2040 | 4160 | 6380 | 5070 | 10040 | 14980 | 19820 | 1890 | 3830 | 5720 | 5530 | 11120 | 16690 | 22170 |
| Acoustic **Lp** 4 m (3) | High speed | **dB(A)** | 45 | 48 | 50 | 48 | 51 | 53 | 54 | 45 | 48 | 50 | 48 | 51 | 53 | 54 |
| | Medium speed | **dB(A)** | 39 | 40 | 42 | 43 | 46 | 48 | 49 | 39 | 40 | 42 | 43 | 46 | 48 | 49 |
| | Low speed | **dB(A)** | 31 | 34 | 36 | 39 | 42 | 44 | 45 | 31 | 34 | 36 | 39 | 42 | 44 | 45 |

| 200 Pa (1) | | | NCP 831 | NCP 1622 | NCP 2393 | NCP 1591 | NCP 3162 | NCP 4693 | NCP 6294 | NCN 831 | NCN 1622 | NCN 2393 | NCN 1591 | NCN 3162 | NCN 4693 | NCN 6294 |
|---|---|---|---|---|---|---|---|---|---|---|---|---|---|---|---|---|
| Capacity (2) **DT1 = 10K SC 1** | High speed | **kW** | - | - | - | **18,79** | **37,41** | **55,61** | **73,48** | - | - | - | - | - | - | - |
| | Medium speed | **kW** | - | - | - | **17,97** | **35,68** | **52,99** | **70,78** | - | - | - | - | - | - | - |
| | Low speed | **kW** | - | - | - | **16,39** | **32,52** | **48,21** | **64,32** | - | - | - | - | - | - | - |
| Capacity (2) **DT1 = 8K SC 2** | High speed | **kW** | - | - | - | **12,27** | **24,57** | **36,55** | **48,28** | - | - | - | **10,94** | **21,55** | **32,12** | **42,33** |
| | Medium speed | **kW** | - | - | - | **11,73** | **23,52** | **34,97** | **46,66** | - | - | - | **10,48** | **20,50** | **30,63** | **40,95** |
| | Low speed | **kW** | - | - | - | **10,75** | **21,52** | **31,94** | **42,59** | - | - | - | **9,67** | **18,97** | **28,34** | **37,31** |
| Air flow | High speed | **$m^3/h$** | - | - | - | 5900 | 11700 | 17400 | 23000 | - | - | - | 6150 | 12200 | 18150 | 24000 |
| | Medium speed | **$m^3/h$** | - | - | - | 5490 | 10860 | 16140 | 21720 | - | - | - | 5700 | 11190 | 16640 | 22600 |
| | Low speed | **$m^3/h$** | - | - | - | 4760 | 9400 | 13920 | 18740 | - | - | - | 4940 | 9760 | 14520 | 19200 |
| Acoustic **Lp** 4 m (3) | High speed | **dB(A)** | - | - | - | 48 | 51 | 53 | 54 | - | - | - | 48 | 51 | 53 | 54 |
| | Medium speed | **dB(A)** | - | - | - | 41 | 44 | 46 | 47 | - | - | - | 41 | 44 | 46 | 47 |
| | Low speed | **dB(A)** | - | - | - | 39 | 42 | 44 | 45 | - | - | - | 39 | 42 | 44 | 45 |

HEATCRAFT
Worldwide Refrigeration

# Air heat exchangers

## Condensers

- Axial fan condensers
  **MA - WA - NEOSTAR**
- Centrifugal fan condensers
  **CCT - CCV**

## Dry coolers

- Dry coolers with axial fans
  **FC / FI NEOSTAR**
- Dry coolers with axial fans in V
  **AEV**

Heatcraft reserves itself the right to make changes at any time without preliminary notice - Photos non-contractual

FRIGA-BOHN

HYFRA® PEDIA

HK® REFRIGERATION

# Condensers / Dry coolers - Overview and capacities

| | | | MA | WA | NEOSTAR | CCT | CCV | FC/FI NEOSTAR | AEV |
|---|---|---|---|---|---|---|---|---|---|
| | | | | | | | | 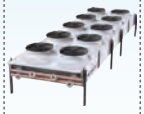 | |
| Capacity | R404A | Maxi | 14 kW | 198 kW | 1250 kW | 138 kW | 302 kW | 1200 kW | 1400 kW |
| | | Mini | 3 kW | 7 kW | 18 kW | 4 kW | 61 kW | 20 kW | 150 kW |
| Fans | Number | Axial | 1 > 2 | 1 > 6 | 1 > 16 | - | - | 1 > 16 | 1 > 3 |
| | | Centrifugal | - | - | - | 1 > 4 | 1 > 4 | - | - |
| | EC motor | | - | - | ○ | - | ● | ○ | - |
| | Factory wired | | ● | ● | ● | ○ | ● | ● | ○ |
| | Position and blowing | | 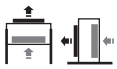 | 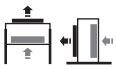 | 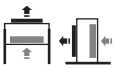 | 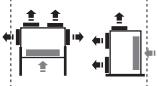 | | 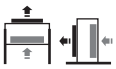 | |
| Coil | Coil protection | | ● | ○ | ○ | ○ | ○ | ○ | ○ |
| E Solutions Efficiency • Environment | Energy efficiency (EC motor) | | - | - | ⚡ | - | ⚡ | ⚡ | - |
| | Low noise level | | - | 🔊 | 🔊 | - | 🔊 | 🔊 | 🔊 |
| | Natural fluids (glycol water) | | - | - | - | - | - | 💧 | 💧 |
| Corner shops - Restaurants | | | ✔ | ✔ | - | ✔ | - | - | - |
| Distribution centres | | | - | ✔ | ✔ | ✔ | ✔ | - | - |
| Industrial process | | | - | ✔ | ✔ | - | ✔ | ✔ | ✔ |
| Air conditioning - "Data processing" | | | - | ✔ | ✔ | - | - | ✔ | - |
| Cogeneration – Generator plants | | | - | - | - | - | - | ✔ | ✔ |

● *Standard* ○ *Option*

**Axial fan condensers** **DT1 = 15K**

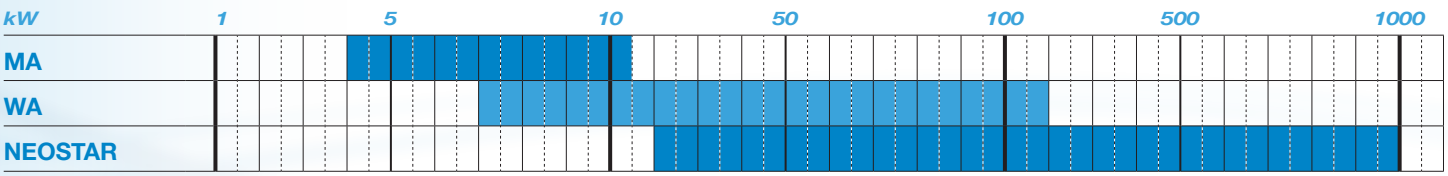


**Centrifugal fan condensers** **DT1 = 15K**

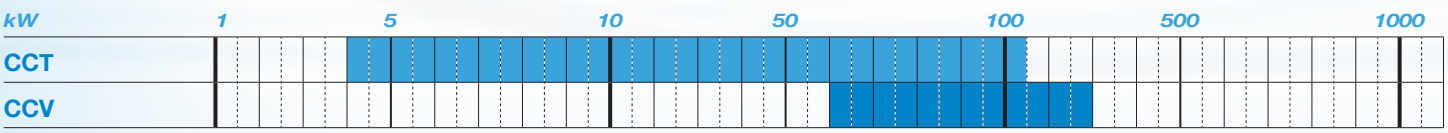


**Dry coolers** **DT1 = 15K**

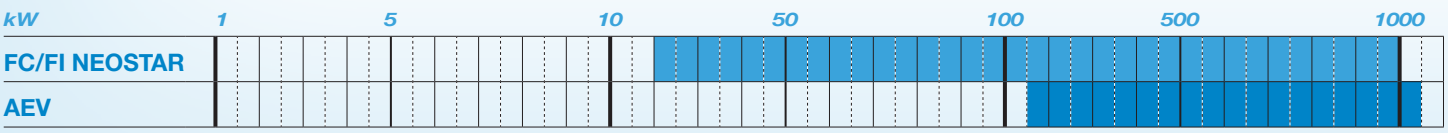

## Selection coefficients

### P/Q0m coefficient - Open compressors

| Evaporating temp. | Condensing temperature | | | | | | |
|---|---|---|---|---|---|---|---|
| te | 30°C | 35°C | 40°C | 45°C | 50°C | 55°C | 60°C |
| -35°C | 1,36 | 1,41 | 1,44 | * | * | * | * |
| -30°C | 1,31 | 1,36 | 1,40 | 1,44 | * | * | * |
| -25°C | 1,27 | 1,32 | 1,36 | 1,41 | 1,45 | * | * |
| -20°C | 1,24 | 1,28 | 1,31 | 1,35 | 1,39 | 1,44 | * |
| -15°C | 1,20 | 1,24 | 1,27 | 1,31 | 1,35 | 1,39 | 1,44 |
| -10°C | 1,18 | 1,21 | 1,24 | 1,27 | 1,31 | 1,35 | 1,40 |
| -5°C | 1,15 | 1,18 | 1,21 | 1,24 | 1,27 | 1,31 | 1,36 |
| 0°C | 1,13 | 1,15 | 1,18 | 1,21 | 1,24 | 1,27 | 1,31 |
| +5°C | 1,10 | 1,13 | 1,15 | 1,18 | 1,21 | 1,24 | 1,28 |
| +10°C | 1,08 | 1,11 | 1,13 | 1,15 | 1,17 | 1,21 | 1,24 |

### Suction gas-cooled compressors

| Evaporating temp. | Condensing temperature | | | | | | |
|---|---|---|---|---|---|---|---|
| te | 30°C | 35°C | 40°C | 45°C | 50°C | 55°C | 60°C |
| -40°C | 1,64 | 1,69 | 1,76 | 1,86 | 2,03 | * | * |
| -35°C | 1,56 | 1,61 | 1,66 | 1,73 | 1,83 | * | * |
| -30°C | 1,48 | 1,53 | 1,57 | 1,62 | 1,69 | * | * |
| -25°C | 1,42 | 1,46 | 1,50 | 1,54 | 1,60 | 1,68 | * |
| -20°C | 1,37 | 1,40 | 1,44 | 1,48 | 1,53 | 1,60 | * |
| -15°C | 1,32 | 1,35 | 1,38 | 1,43 | 1,48 | 1,53 | 1,44 |
| -10°C | 1,28 | 1,31 | 1,34 | 1,37 | 1,42 | 1,46 | 1,40 |
| -5°C | 1,23 | 1,26 | 1,29 | 1,33 | 1,37 | 1,41 | 1,36 |
| 0°C | 1,20 | 1,22 | 1,25 | 1,28 | 1,32 | 1,36 | 1,31 |
| +5°C | 1,16 | 1,19 | 1,21 | 1,24 | 1,28 | 1,31 | 1,28 |
| +10°C | 1,13 | 1,15 | 1,18 | 1,21 | 1,23 | 1,26 | 1,24 |

**Except for operating limits of a single-stage compressor*

### C1 : Altitude coefficient

**C1** = (1 - 0,000075 x H*) ***H** = Altitude in metres above sea level

### C2 : DT1 coefficient

| DT1 | 8 | 9 | 10 | 11 | 12 | 13 | 14 | 15 | 16 | 17 | 18 |
|---|---|---|---|---|---|---|---|---|---|---|---|
| C2 | 0,53 | 0,60 | 0,67 | 0,73 | 0,80 | 0,87 | 0,93 | 1 | 1,07 | 1,13 | 1,20 |

### C3 : Ambient temperature coefficient $t_{A.1}$

| $t_{1.1}$ | 15 | 20 | 25 | 30 | 35 | 40 | 45 | 50 |
|---|---|---|---|---|---|---|---|---|
| C3 | 1,03 | 1,02 | 1 | 0,98 | 0,96 | 0,94 | 0,92 | 0,91 |

### C4 : Refrigerant coefficient

| Refrigerant | R134a | R22 | R404A | R407A | R407C | R507 |
|---|---|---|---|---|---|---|
| C4 | 0,93 | 0,96 | 1 | 0,83 | 0,87 | 1 |

### C5 : Fin material correction

| | Aluminium | Coated aluminium | Copper |
|---|---|---|---|
| C5 | 1 | 0,97 | 1,03 |

### Sound pressure correction according to the number of fans

| Fan | Num. | 1 | 2 | 3 | 4 | 5 | 6 | 8 | 10 | 12 |
|---|---|---|---|---|---|---|---|---|---|---|
| Correction | dB(A) | 0 | 3 | 5 | 6 | 7 | 8 | 9 | 10 | 11 |

### Sound pressure correction according to distance

| Distance | m | 5 | 6 | 8 | 10 | 12 | 16 | 32 | 64 | 128 |
|---|---|---|---|---|---|---|---|---|---|---|
| Correction | dB(A) | +6 | +4,5 | +2 | 0 | -1,5 | -4 | -10 | -16 | -22 |

## On-board equipment

Our units are static. Included in a refrigeration system, they may be exited by motors, compressors, diesel engines, vehicles or others and suffer from vibration. The person responsible for the system must ensure that the excitation frequency may not, under any circumstances, provoke the resonance of other components as this could result in irreparable damage (in particular in the case of on-board systems).

## Selection

'**P**' = condenser total heat of rejection.
In the absence of specific documents, "**P**" may be calculated using one of the two tables (previous page), based on the refrigeration capacity "**Q0m**". To define a model, the application conditions and the selection conditions must be harmonized. To do this, the required capacity "P" must be divided by the 5 coefficients indicated below:

For that,'**P**' should be divided by the 5 following factors:

**C1** Altitude factor
**C2** DT1 factor
**C3** Ambient temperature factor
**C4** Refrigerant factor
**C5** Fin material factor

according to the formula:

$$P1 = \frac{P}{C1 \times C2 \times C3 \times C4 \times C5}$$

Select a model in the table corresponding to the rotation speed chosen and check that the noise level corresponds to level required. If this selection process enables the choice of models **L** or **P**, without dimensional prerequisites, choose the least expensive model. In the same way, to define the capacity "**P**" of a model under conditions other than those indicated in the documentation, the following formula is applied:

P = P1 x (C1 x C2 x C3 x C4 x C5)

## Example

| | |
|---|---|
| Required capacity '**P**' | 58 kW |
| Altitude | 200 m |
| DT1 | 14 K |
| Ambient temperature | +30 °C |
| Refrigerant | R134a |
| Coated aluminium fins | 0,97 |
| Sound pressure level at 5 m (measured on a parallelepiped surface) | 37 dB(A) |

Whereby: **C1 = 0,99 - C2 = 0,93 - C3 = 0,98 - C4 = 0,93 - C5 = 0,97**

in which case:

$$\frac{58}{0{,}99 \times 0{,}93 \times 0{,}98 \times 0{,}93 \times 0{,}97} = 71{,}5 \text{ kW}$$

Sound pressure level in the conditions of the tables.
Distance correction = 6 dB(A)
37 - 6 = 31 dB(A)
The **NEOSTAR SE 16D P02 D2** will be selected.
Sound pressure level at 10 m = 31 dB(A)
**Note** : If the noise level is very different, then select a model from the other tables.

## Noise levels

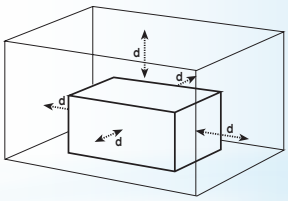


**Noise level LpA :**
The sound pressure level Lp indicated in the characteristics tables was measured at 10 metres, direct line of sight on a reflective surface in compliance with standard EN 13487 (parallelepiped reference surface). The relationship between sound pressure Lp and sound power Lw is derived from the following formula:

$$LpA = LwA - 10 \log \frac{Si}{So}$$

Si = parallelepiped surface d = 10 m.
So = reference surface 1 m2.

Only the spectrum of sound power and the LwA value are contractually binding. For a distance other than 10 m, refer to the correction factors below. For precise calculation of the sound pressure on site, take into consideration the sound power of each fan and its position as well as environmental conditions (directivity, reflection,...).be taken into account (directivity, reflections, ...).

## The energy efficiency class is defined by the ratio R :

**nominal certified capacity of the condenser in kW divided by the total certified input power of the motors in kW in the conditions of the rating standard.**

EUROVENT CERTIFIED PERFORMANCE
www.eurovent-certification.com

### A class
Energy ratio **R**: **> 110**
Energy consumption: **extremely low**

### B class
Energy ratio **R**: **70 - 110**
Energy consumption: **very low**

### C class
Energy ratio **R**: **45 - 70**
Energy consumption: **low**

### D class
Energy ratio **R**: **30 - 45**
Energy consumption: **medium**

### E class
Energy ratio **R**: **< 30**
Energy consumption: **high**

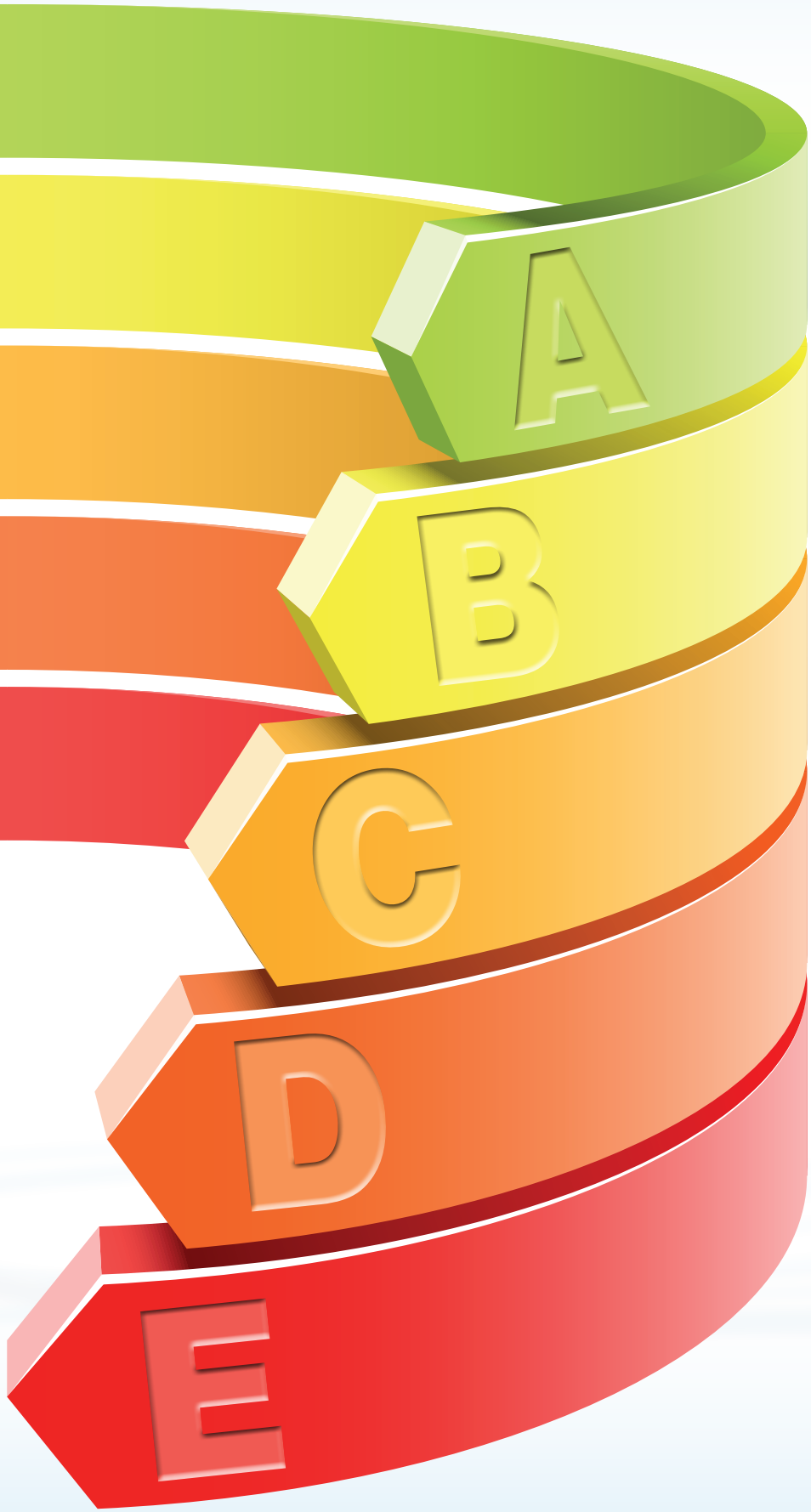

# EC motor, control and protection cabinet

## Control option on the NEOSTAR range

- Motor with electronic switching (**EC**).
- **RP1**: pressure control switch.
- **RP2**: voltage modulation speed control.
- **RP3**: frequency modulation speed control.

## Control options on the FC / FI NEOSTAR and AEV ranges

- Motor with electronic switching (**EC**) for FC / FI NEOSTAR
- **RT1**: thermostatic control.
- **RT2**: voltage modulation speed control.
- **RT3**: frequency modulation speed control.

Heatcraft reserves itself the right to make changes at any time without preliminary notice - Photos non-contractual

## Electronic switching motor (EC)
## NEOSTAR - FC / FI NEOSTAR

### Description

- Motor fan unit with electronic switching.
- IP 55 cabinet.

This option is always proposed with the controller wired:
- motor power connections wired.
- 0 - 10V circuit wired (between motor and enclosure).
- The “motor fault” indicator wired to the electrical enclosure.

**Additional options**
In addition to the standard elements proposed above, other elements are also available:

| | |
|---|---|
| **MEC 1** | Serial bus wiring of motors with addressing of the motor fan units. |
| **MEC 2** | Serial bus wiring of motors with addressing of the motor fan units and setting of max. speed parameter. |
| **MEC 3** | Setting of day/night operation parameters (clock and potentiometer). |
| | Back-up operation possible (please contact us for details). |

### Advantages

- Extremely low power consumption.
- Very low noise level.
- Control versatility.
- Reduction of operating costs.

### Return on investment calculation tool:

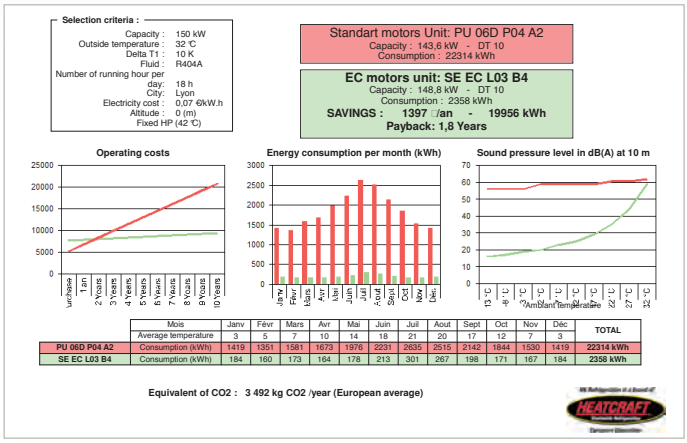


| | Mois | Janv | Févr | Mars | Avr | Mai | Juin | Juil | Acout | Sept | Oct | Nov | Déc | TOTAL |
|---|---|---|---|---|---|---|---|---|---|---|---|---|---|---|
| | Average temperature | 3 | 5 | 7 | 10 | 14 | 18 | 21 | 20 | 17 | 12 | 7 | 3 | |
| PU 06D P04 A2 | Consumption (kWh) | 1419 | 1351 | 1581 | 1673 | 1976 | 2231 | 2635 | 2515 | 2142 | 1844 | 1530 | 1419 | 22314 kWh |
| SE EC L03 B4 | Consumption (kWh) | 184 | 160 | 173 | 164 | 178 | 213 | 301 | 267 | 198 | 171 | 167 | 184 | 2358 kWh |

*Please contact us for comparative studies between the AC motor/EC motor:*
***quotation@heatcrafteurope.com***

## RP/RT control + protection cabinet

| Control by speed variation | | Control by speed variation | | Control "On / Off" | |
|---|---|---|---|---|---|
| **RP3** | **RT3** | **RP2** | **RT2** | **RP1** | **RT1** |
| **With frequency speed controller** | | **With voltage speed controller** | | **In cascade** | |
| **NEOSTAR** | **FC / FI NEOSTAR AEV** | **NEOSTAR** | **FC / FI NEOSTAR AEV** | **NEOSTAR** | **FC / FI NEOSTAR AEV** |
| • A frequency speed controller.<br>• Protection of the speed controller with fuses.<br>• Enclosure ventilation. | | • A voltage speed controller.<br>• Protection of the speed controller with fuses.<br>• Enclosure ventilation. | | • A pressure control switch. | • A thermostatic control switch. |
| • A pressure sensor with Schrader connector and shielded cable. | • A PT100 temperature sensor with finger sleeve. | • A pressure sensor with Schrader connector and shielded cable. | • An NTC temperature sensor with finger sleeve. | • 1 or 2 pressure sensors with Schrader connector and shielded cable. | • 1 or 2 NTC temperature sensors with finger sleeve. |

### + CMP enclosure

- IP54 cabinet.
- Fault protection: one normally open contact (NO) and one normally closed contact (NC).
- A main switch.
- One contactor per motor.
- Motor and supply packing glands.
- Wiring diagram.
- This enclosure is proposed as an optional extra fitted to the unit (floor support for those larger than H = 800 x L = 1,000) or supplied not fitted and packed separately. When delivered not fitted, the cable connecting the enclosure to the unit is provided by the installer.
- A support kit for floor mounting (**MSK**) is available as optional extra.
- In the **RP3 / RT3** version, it is recommendable to use the shielded cable connection.

### Advantages

- Noise level.
- Optimized electrical power consumption.
- Control versatility.
- Simple programming adaptable to all types of processes.
- Fast installation.

**Remarks:**
If electrical power consumption is a key factor, give preference to the **MEC** option.
Contact us for a profitability study.

### Advantages

- Price

**Remarks:**
This enclosure cannot be ordered separately for later installation.
This control mode may generate noise at low rotation speeds.

If noise level is a key factor, give preference to the **RP3 / RT3** control system.

### Advantages

**1 to 4 control stages**
- Capable of controlling two circuits.
- Setting of day/night operation parameter setting possible.

**4 to 10 control stages**
- Capable of controlling two circuits.
- Setting of day/night operation parameter possible.
- Date stamper incorporated.
- Capable of controlling a HP float type regulator.

HEATCRAFT™
Worldwide Refrigeration

# Axial fan condenser

EUROVENT CERTIFIED PERFORMANCE
www.eurovent-certification.com

## MA range

- Protected coil fully painted as standard.
- 3 types de motoventilateurs: 4, 6 and 8 pole for optimum noise attenuation.
- 2 blowing directions with horizontal or vertical installation with legs (optional).
- Modular product comprising 9 models: 3 types of coils and 3 types of fans.

3 ▁▂▃▅▆ 14 kW

Heatcraft reserves itself the right to make changes at any time without preliminary notice - Photos non-contractual

FRIGA-BOHN

HYFRA® PEDIA

HK® REFRIGERATION

# MA - Axial fan condenser

## Market segments

*FFS* *Bars - Restaurants - Corner shops - Mini-markets*

## Description

### Casing

- Galvanized steel casing totally protected with polyester painting (RAL 9002).

### Ventilation

- 2 mono-fan models and 1 twin-fan model, Ø 350 mm.
- 4, 6 and 8P models for even better noise level attenuation.
- Fan(s) delivered unfitted, packing gland at bottom.

### Options

**PIE** Legs for MA installation with vertical air flow.

## Certifications

## Advantages

### Installation

Legs (optional) for floor-mounted installation with vertical air flow.

Highly modular coil + separate motor concept:
rapid connection during fan assembly, gland located at the bottom.

### Servicing / Maintenance

Fans of the "plug" type for easy maintenance.

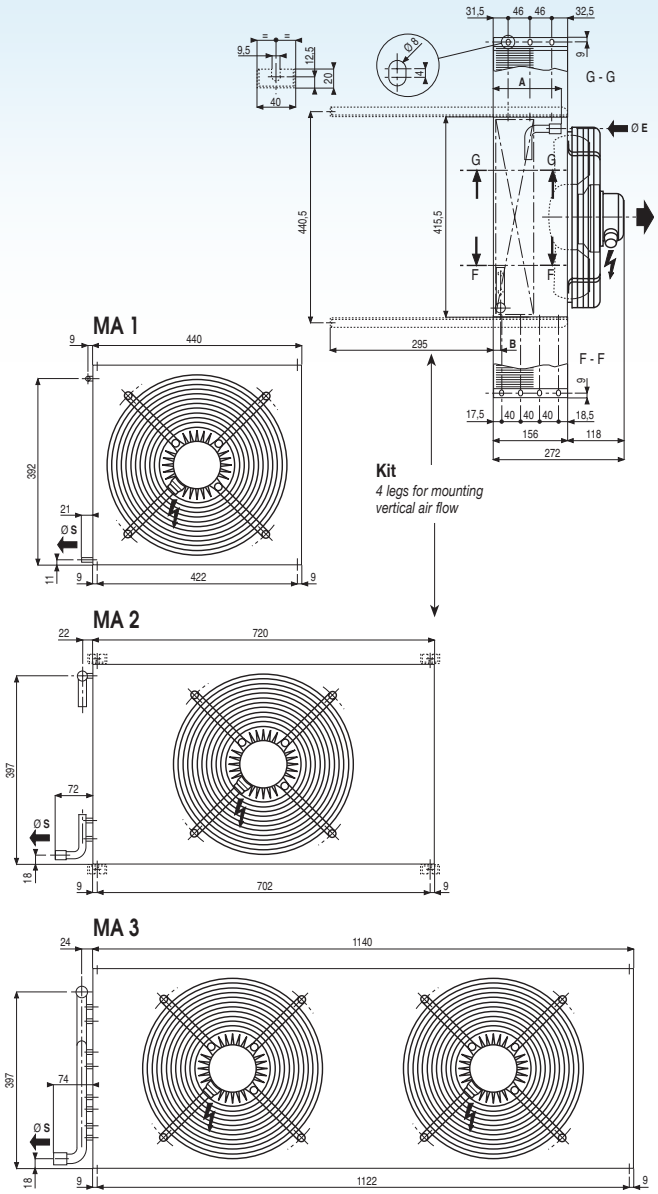


## MA ... 3,63 mm

| | | MA ... | 1 | 1 | 1 | 2 | 2 | 2 | 3 | 3 | 3 |
|---|---|---|---|---|---|---|---|---|---|---|---|
| | | | 4P | 6P | 8P | 4P | 6P | 8P | 4P | 6P | 8P |
| Capacity R404A | DT1 = 15K | kW | **4.1** | **3.2** | **2.8** | **7.9** | **5.8** | **4.7** | **12.3** | **9.2** | **7.8** |
| Surface | | $m^2$ | 5,7 | 5,7 | 5,7 | 12,9 | 12,9 | 12,9 | 20,9 | 20,9 | 20,9 |
| Circuit volume | | $dm^3$ | 0,9 | 0,9 | 0,9 | 2,2 | 2,2 | 2,2 | 3,5 | 3,5 | 3,5 |
| Fan (1) | Air flow | $m^3/h$ | 1970 | 1340 | 950 | 2300 | 1600 | 1110 | 4200 | 2900 | 2060 |
| 230V/1/50Hz | Nb x Ø | mm | 1 x 350 | 1 x 350 | 1 x 350 | 1 x 350 | 1 x 350 | 1 x 350 | 2 x 350 | 2 x 350 | 2 x 350 |
| Energy efficiency class | | | E | E | E | D | D | C | E | D | D |
| Acoustic | Lw (2) | dB(A) | 70 | 60 | 53 | 70 | 60 | 53 | 73 | 63 | 56 |
| | Lp (3) | dB(A) | 39 | 29 | 22 | 39 | 29 | 22 | 42 | 32 | 25 |
| Net weight with fan(s) | | kg | 7 | 7 | 7 | 12 | 12 | 12 | 18 | 18 | 18 |
| Dimensions | A | mm | 125 | 125 | 125 | 122 | 122 | 122 | 122 | 122 | 122 |
| | B | mm | 34 | 34 | 34 | 15 | 15 | 15 | 15 | 15 | 15 |
| Inlet | Ø E | ODF *<br>ODM ** | 8 mm<br>3/8" | 8 mm<br>3/8" | 8 mm<br>3/8" | 1/2" | 1/2" | 1/2" | 16 mm | 16 mm | 16 mm |
| Outlet | Ø S | ODF *<br>ODM ** | 8 mm<br>3/8" | 8 mm<br>3/8" | 8 mm<br>3/8" | 1/2" | 1/2" | 1/2" | 16 mm | 16 mm | 16 mm |
| Packaging | | mm | 570 x 430 x 185 | | | 880 x 430 x 185 | | | 1280 x 460 x 185 | | |
| Fan packaging | | mm | 460 x 460 x 185 (x1) | | | 460 x 460 x 185 (x1) | | | 460 x 460 x 185 (x2) | | |

*(1) 4P : 117 W max - 0,9 A max (4) - 6P : 80 W max - 0,45 A max (4) - 8P : 65 W max - 0,35 A max (4)*
*(2) Sound pressure level in dB(A), obtained in compliance with standard NF EN 13487 (parallelepiped reference surface).*
*(3) Sound pressure level in dB(A) measured at 10 m, line of sight, on a reflective parallelepiped measurement surface, given for information only.*
*Values measured under nominal operating conditions with clean coils and rated voltage.*
*(4) Setting of overload protection levels.*

** ODF: Female to receive a tube of the same diameter.* *** ODM: Male to receive a tube of the same diameter.*

HEATCRAFT™
Worldwide Refrigeration

# Axial fan condenser

EUROVENT CERTIFIED PERFORMANCE
www.eurovent-certification.com

E Solutions
Efficiency • Environment

## WA range

- Painted casing and corrosion-resistant, stainless steel screws.
- Very low noise 12 and 16 pole models.
- 2-speed, axial fans.
- 2 blowing directions: horizontal or vertical installation as standard.
- Modular product comprising 34 models: 13 types of coils and 4 types of fans.

*Low noise level*

7.5 99 kW

FRIGA-BOHN

HYFRA® PEDIA

HK® REFRIGERATION

Heatcraft reserves itself the right to make changes at any time without preliminary notice - Photos non-contractual

## Market segments

*FFS* *Bars - Restaurants - Corner shops - Mini-markets*

## Designation

# WA 39(1) 04/06P(2)

(1) Model
(2) **04/06P** = 1,500/1,000 rpm - **06/08P** = 1,000/750 rpm
**08/12P** = 750/500 rpm - **12/16P** = 500/375 rpm

## Certifications

## Description

### Casing

- Made of galvanized sheet steel, the condensers of the WA range are extremely well protected against corrosion thanks to the UV-resistant, polyester paint coating, as well as the use of pre-painted, galvanized sheet steel, colour grey RAL 9002.
- Components (fans, heat-exchanger coil) are fitted with stainless steel screws offering excellent corrosion resistance.

### Ventilation

- The condensers of the WA range are equipped with axial fans:
  **Ø 500 mm, 2 speeds:**
  04/06P = 1,500/1,000 rpm.
  08/12P = 750/500 rpm.
  **Ø 630 mm, 2 speeds:**
  04/06P = 1,500/1,000 rpm.
  06/08P = 1,000/750 rpm.
  08/12P = 750/500 rpm.
  12/16P = 500/375 rpm.
  400 V, 3-phase, 50 Hz (50-60 Hz for 08/12P and 12/16P motors), monoblock, external rotor, with incorporated thermal overload protection, IP 54, class F.
- The high-efficiency, profiled fan blades turn at a very low noise level.
- The protection guards are compliant with safety standards.
- 2-speed motor connection: Δ = high speed, Y = low speed.

### Coil

- The condensers of the WA range are equipped with a compact, high-efficiency, finned coil composed of staggered, grooved tubes placed in the air flow and with profiled aluminium fins, spacing 2.12 mm, optimizing the heat exchange coefficient.

## Advantages

### Installation

The unit may be installed in horizontal or vertical position with standard legs.

The coil and fan units may be delivered separately.

### Servicing / Maintenance

Fans of the "plug" type for easy maintenance.

External-rotor, axial fans require no specific maintenance.

## Options

| Kit | Factory | |
|---|---|---|
| | | **Ventilation** |
| | IRP | Rotary proximity switch(es). |
| | M60 | Fan 400 V/3/60 Hz. |
| | MM5 | Fan 230 V/1/50 Hz - 04/06P - 06/08P - 08/12P. |
| | M23* | Fan 230 V/3/50 Hz - 04/06P. |
| | M24* | Fan 230 V/3/50-60 Hz - 08/12P. |
| | | **Coil** |
| | BXT | Blygold Polual XT coil protection. |

** Fans not kept on stock.*

### Vertical air flow

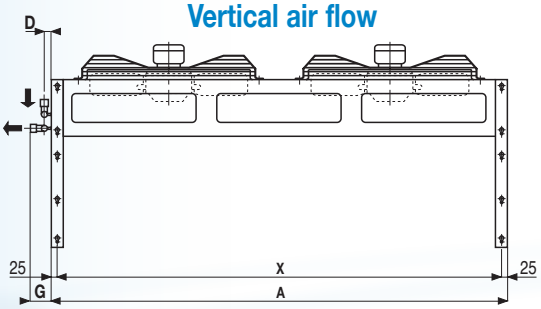


### Horizontal air flow

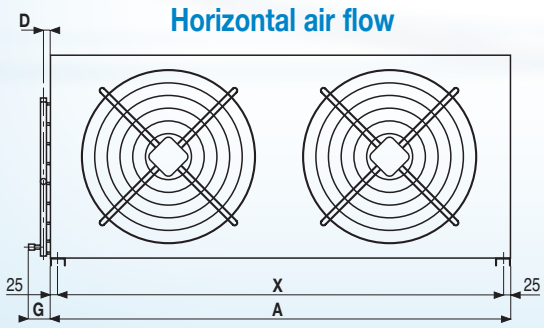


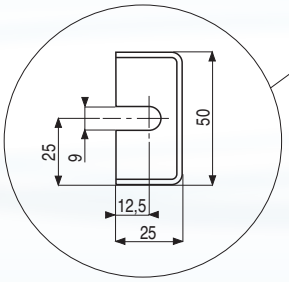


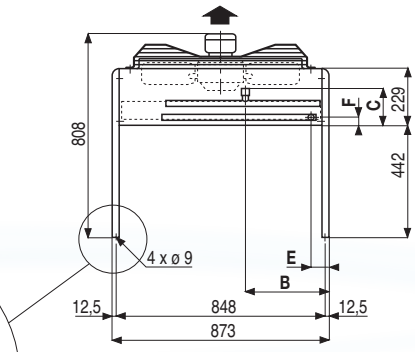


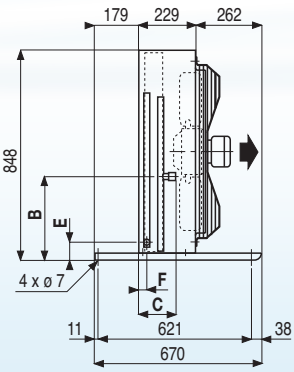

# WA - Axial fan condenser

## WA ..

### 04P/06P (1,500/1,000 rpm.)

| | | | WA .. | 15 | 19 | 22 | 30 | 39 | 44 | 48 | 58 | 67 | 54 | 59 | 81 | 95 |
|---|---|---|---|---|---|---|---|---|---|---|---|---|---|---|---|---|
| Capacity R404A | DT1 = 15K | 04P (Δ) | kW | 12,7 | 16,5 | 18,8 | 25,3 | 33,1 | 37,5 | 38,0 | 49,6 | 56,3 | 56,5 | 62,6 | 85,3 | 98,8 |
| | | 06P (Y) | kW | 11,6 | 14,7 | 16,1 | 23,1 | 29,3 | 32,2 | 34,7 | 44,0 | 48,3 | 47,1 | 51,4 | 70,7 | 79,1 |
| Surface | | | $m^2$ | 17,50 | 26,25 | 35,00 | 35,00 | 52,50 | 70,00 | 52,50 | 78,75 | 105,00 | 71,60 | 95,40 | 107,40 | 143,10 |
| Circuit volume | | | $dm^3$ | 3,3 | 4,9 | 6,4 | 6,0 | 9,2 | 12,1 | 9,0 | 13,3 | 17,5 | 11,1 | 14,7 | 17,3 | 22,7 |
| Fan * | Air flow | 04P (Δ) | $m^3/h$ | 5974 | 5634 | 5315 | 11948 | 11268 | 10630 | 17922 | 16902 | 15945 | 23200 | 21300 | 34800 | 31950 |
| | | 06P (Y) | $m^3/h$ | 5036 | 4654 | 4275 | 10072 | 9308 | 8550 | 15108 | 13962 | 12825 | 16600 | 15100 | 24900 | 22650 |
| | | | Nb | 1x Ø 500 | 1x Ø 500 | 1x Ø 500 | 2x Ø 500 | 2x Ø 500 | 2x Ø 500 | 3x Ø 500 | 3x Ø 500 | 3x Ø 500 | 2x Ø 630 | 2x Ø 630 | 3x Ø 630 | 3x Ø 630 |
| Energy efficiency class | | 04P (Δ) | | E | E | D | E | E | D | E | E | D | E | E | E | E |
| | | 06P (Y) | | E | D | D | E | D | D | E | D | D | E | E | E | E |
| Acoustic | Lw (1) | 04P (Δ) | dB(A) | 83 | 83 | 83 | 86 | 86 | 86 | 88 | 88 | 88 | 93 | 93 | 95 | 95 |
| | | 06P (Y) | dB(A) | 78 | 78 | 78 | 81 | 81 | 81 | 83 | 83 | 83 | 85 | 85 | 87 | 87 |
| | Lp (2) | 04P (Δ) | dB(A) | 52 | 52 | 52 | 55 | 55 | 55 | 57 | 57 | 57 | 62 | 62 | 64 | 64 |
| | | 06P (Y) | dB(A) | 47 | 47 | 47 | 50 | 50 | 50 | 52 | 52 | 52 | 54 | 54 | 56 | 56 |
| Net weight | | | kg | 36 | 40 | 44 | 63 | 72 | 80 | 92 | 104 | 116 | 93 | 103 | 137 | 152 |
| Circuits | | | Nb | - | - | - | 4 | 6 | 8 | 8 | 8 | 8 | 8 | 8 | 12 | 16 |
| Dimensions | A | | mm | 730 | 730 | 730 | 1390 | 1390 | 1390 | 2050 | 2050 | 2050 | 1870 | 1870 | 2770 | 2770 |
| | B | | mm | 240 | 520 | 340 | 340 | 495 | 390 | 390 | 470 | 390 | 470 | 390 | 455 | 455 |
| | C | | mm | 150 | 150 | 150 | 150 | 155 | 155 | 155 | 155 | 155 | 150 | 150 | 160 | 160 |
| | D | | mm | 20 | 25 | 25 | 25 | 30 | 30 | 30 | 30 | 30 | 25 | 25 | 50 | 50 |
| | E | | mm | 55 | 40 | 55 | 55 | 45 | 55 | 55 | 45 | 55 | 45 | 55 | 45 | 60 |
| | F | | mm | 73 | 53 | 34 | 73 | 53 | 34 | 73 | 53 | 34 | 53 | 34 | 53 | 34 |
| | G | | mm | 78 | 81 | 81 | 81 | 88 | 88 | 92 | 88 | 88 | 85 | 85 | 115 | 115 |
| | X | | mm | 680 | 680 | 680 | 1340 | 1340 | 1340 | 2000 | 2000 | 2000 | 1820 | 1820 | 2720 | 2720 |
| Inlet | | | ODF (4) | 1/2" | 5/8" | 5/8" | 3/4" | 7/8" | 7/8" | 7/8" | 1 1/8" | 1 1/8" | 1 1/8" | 1 1/8" | 1 3/8" | 1 3/8" |
| Outlet | | | ODF (4) | 1/2" | 5/8" | 5/8" | 5/8" | 7/8" | 7/8" | 7/8" | 7/8" | 7/8" | 7/8" | 1 1/8" | 1 1/8" | 1 1/8" |

** Ø 500 mm - 400 V/3/50 Hz - Δ : 580 W max - 1,05 A max (3) - Y : 440 W max - 0,71 A max (3) / Ø 630 mm - 400 V/3/50 Hz - Δ : 1950 W max - 3,4 A max (3) - Y : 1400 W max - 2,3 A max (3)*

## WA ..

### 06P/08P (1,000/750 rpm.)

| | | | WA .. | 41 | 42 | 57 | 65 |
|---|---|---|---|---|---|---|---|
| Capacity R404A | DT1 = 15K | 06P (Δ) | kW | 42,6 | 45,9 | 63,9 | 68,9 |
| | | 08P (Y) | kW | 35,1 | 37,3 | 52,6 | 56,0 |
| Surface | | | $m^2$ | 71,60 | 95,40 | 107,40 | 143,10 |
| Circuit volume | | | $dm^3$ | 11,1 | 14,7 | 17,3 | 22,7 |
| Fan * | Air flow | 06P (Δ) | $m^3/h$ | 14190 | 12686 | 21285 | 19029 |
| | | 08P (Y) | $m^3/h$ | 10460 | 9408 | 15690 | 14112 |
| | | | Nb | 2x Ø 630 | 2x Ø 630 | 3x Ø 630 | 3x Ø 630 |
| Energy efficiency class | | 06P (Δ) | | C | C | C | C |
| | | 08P (Y) | | C | C | C | C |
| Acoustic | Lw (1) | 06P (Δ) | dB(A) | 83 | 83 | 85 | 85 |
| | | 08P (Y) | dB(A) | 76 | 76 | 78 | 78 |
| | Lp (2) | 06P (Δ) | dB(A) | 52 | 52 | 54 | 54 |
| | | 08P (Y) | dB(A) | 45 | 45 | 47 | 47 |
| Net weight | | | kg | 89 | 99 | 131 | 146 |
| Circuits | | | Nb | 8 | 8 | 12 | 16 |
| Dimensions | A | | mm | 1870 | 1870 | 2770 | 2770 |
| | B | | mm | 470 | 390 | 455 | 455 |
| | C | | mm | 150 | 150 | 160 | 160 |
| | D | | mm | 25 | 25 | 50 | 50 |
| | E | | mm | 45 | 55 | 45 | 60 |
| | F | | mm | 53 | 34 | 53 | 34 |
| | G | | mm | 85 | 85 | 115 | 115 |
| | X | | mm | 1820 | 1820 | 2720 | 2720 |
| Inlet | | | ODF (4) | 1 1/8" | 1 1/8" | 1 3/8" | 1 3/8" |
| Outlet | | | ODF (4) | 7/8" | 1 1/8" | 1 1/8" | 1 1/8" |

** Ø 630 mm - 400 V/3/50 Hz - Δ : 450 W max - 1,1 A max (3) - Y : 280 W max - 0,6 A max (3)*

*(1) Sound pressure level in dB(A), obtained in compliance with standard NF EN 13487 (parallelepiped reference surface).*
*(2) Sound pressure level in dB(A) measured at 10 m, line of sight, on a reflective parallelepiped measurement surface, given for information only.*
*Values measured under nominal operating conditions with clean coils and rated voltage.*
*(3) Setting of overload protection levels.*
*(4) ODF = Female to receive a tube of the same diameter.*

| IRP | M60 | MM5 | M23 | M24 | BXT |
|---|---|---|---|---|---|
| O | O | O | O | - | O |

# WA - Axial fan condenser

## WA .. 08P/12P (750/500 rpm.)

| | | | WA .. | 10 | 13 | 14 | 21 | 26 | 27 | 32 | 37 | 40 | 34 | 36 | 47 | 51 |
|---|---|---|---|---|---|---|---|---|---|---|---|---|---|---|---|---|
| Capacity R404A | DT1 = 15K | 08P (Δ) | kW | 8,8 | 10,6 | 11,3 | 17,7 | 21,2 | 22,6 | 26,5 | 31,8 | 33,9 | 34,5 | 36,2 | 51,8 | 54,2 |
| | | 12P (Y) | kW | 7,5 | 8,8 | 9,1 | 15,0 | 17,6 | 18,3 | 22,5 | 26,3 | 27,4 | 25,9 | 26,6 | 38,8 | 40,0 |
| Surface | | | $m^2$ | 17,50 | 26,25 | 35,00 | 35,00 | 52,50 | 70,00 | 52,50 | 78,75 | 105,00 | 71,60 | 95,40 | 107,40 | 143,10 |
| Circuit volume | | | $dm^3$ | 3,3 | 4,9 | 6,4 | 6,0 | 9,2 | 12,1 | 9,0 | 13,3 | 17,5 | 11,1 | 14,7 | 17,3 | 22,7 |
| Fan * | Air flow | 08P (Δ) | $m^3/h$ | 3165 | 2880 | 2655 | 6330 | 5760 | 5310 | 9495 | 8640 | 7965 | 10200 | 9062 | 15300 | 13593 |
| | | 12P (Y) | $m^3/h$ | 2446 | 2226 | 2033 | 4892 | 4452 | 4066 | 7338 | 6678 | 6099 | 6780 | 6060 | 10170 | 9090 |
| | | | Nb | 1x Ø 500 | 1x Ø 500 | 1x Ø 500 | 2x Ø 500 | 2x Ø 500 | 2x Ø 500 | 3x Ø 500 | 3x Ø 500 | 3x Ø 500 | 2x Ø 630 | 2x Ø 630 | 3x Ø 630 | 3x Ø 630 |
| Energy efficiency class | | 08P (Δ) | | B | B | B | B | B | B | B | B | B | C | C | C | C |
| | | 12P (Y) | | B | A | A | B | A | A | C | C | C | B | B | B | B |
| Acoustic | Lw (1) | 08P (Δ) | dB(A) | 64 | 64 | 64 | 67 | 67 | 67 | 69 | 69 | 69 | 75 | 75 | 77 | 77 |
| | | 12P (Y) | dB(A) | 58 | 58 | 58 | 61 | 61 | 61 | 63 | 63 | 63 | 67 | 67 | 69 | 69 |
| | Lp (2) | 08P (Δ) | dB(A) | 33 | 33 | 33 | 36 | 36 | 36 | 38 | 38 | 38 | 44 | 44 | 46 | 46 |
| | | 12P (Y) | dB(A) | 27 | 27 | 27 | 30 | 30 | 30 | 32 | 32 | 32 | 36 | 36 | 38 | 38 |
| Net weight | | | kg | 36 | 40 | 44 | 63 | 72 | 80 | 92 | 104 | 116 | 89 | 99 | 131 | 146 |
| Circuits | | | Nb | - | - | - | 4 | 6 | 8 | 8 | 8 | 8 | 8 | 8 | 12 | 16 |
| Dimensions | A | | mm | 730 | 730 | 730 | 1390 | 1390 | 1390 | 2050 | 2050 | 2050 | 1870 | 1870 | 2770 | 2770 |
| | B | | mm | 240 | 520 | 340 | 340 | 495 | 390 | 390 | 470 | 390 | 470 | 390 | 455 | 455 |
| | C | | mm | 150 | 150 | 150 | 150 | 155 | 155 | 155 | 155 | 155 | 150 | 150 | 160 | 160 |
| | D | | mm | 20 | 25 | 25 | 25 | 30 | 30 | 30 | 30 | 30 | 25 | 25 | 50 | 50 |
| | E | | mm | 55 | 40 | 55 | 55 | 45 | 55 | 55 | 45 | 55 | 45 | 55 | 45 | 60 |
| | F | | mm | 73 | 53 | 34 | 73 | 53 | 34 | 73 | 53 | 34 | 53 | 34 | 53 | 34 |
| | G | | mm | 78 | 81 | 81 | 81 | 88 | 88 | 92 | 88 | 88 | 85 | 85 | 115 | 115 |
| | X | | mm | 680 | 680 | 680 | 1340 | 1340 | 1340 | 2000 | 2000 | 2000 | 1820 | 1820 | 2720 | 2720 |
| Inlet | | | ODF (4) | 1/2" | 5/8" | 5/8" | 3/4" | 7/8" | 7/8" | 7/8" | 1 1/8" | 1 1/8" | 1 1/8" | 1 1/8" | 1 3/8" | 1 3/8" |
| Outlet | | | ODF (4) | 1/2" | 5/8" | 5/8" | 5/8" | 7/8" | 7/8" | 7/8" | 7/8" | 7/8" | 7/8" | 1 1/8" | 1 1/8" | 1 1/8" |

** Ø 500 mm - 400 V/3/50-60 Hz - Δ : 115 W max - 0,3 A max (3) - Y : 75 W max - 0,15 A max (3) / Ø 630 mm - 400 V/3/50-60 Hz - Δ : 260 W max - 0,68 A max (3) - Y : 160 W max - 0,32 A max (3)*

## WA .. 12P/16P (500/375 rpm.)

| | | | WA .. | 23 | 24 | 28 | 29 |
|---|---|---|---|---|---|---|---|
| Capacity R404A | DT1 = 15K | 12P (Δ) | kW | 21,8 | 22,4 | 32,7 | 33,7 |
| | | 16P (Y) | kW | 16,6 | 16,8 | 24,9 | 25,1 |
| Surface | | | $m^2$ | 71,60 | 95,40 | 107,40 | 143,10 |
| Circuit volume | | | $dm^3$ | 11,1 | 14,7 | 17,3 | 22,7 |
| Fan * | Air flow | 12P (Δ) | $m^3/h$ | 5376 | 4942 | 8064 | 7413 |
| | | 16P (Y) | $m^3/h$ | 3790 | 3484 | 5685 | 5226 |
| | | | Nb | 2x Ø 630 | 2x Ø 630 | 3x Ø 630 | 3x Ø 630 |
| Energy efficiency class | | 12P (Δ) | | C | C | C | C |
| | | 16P (Y) | | B | B | B | B |
| Acoustic | Lw (1) | 12P (Δ) | dB(A) | 64 | 64 | 66 | 66 |
| | | 16P (Y) | dB(A) | 57 | 57 | 59 | 59 |
| | Lp (2) | 12P (Δ) | dB(A) | 33 | 33 | 35 | 35 |
| | | 16P (Y) | dB(A) | 26 | 26 | 28 | 28 |
| Net weight | | | kg | 89 | 99 | 131 | 146 |
| Circuits | | | Nb | 8 | 8 | 12 | 16 |
| Dimensions | A | | mm | 1870 | 1870 | 2770 | 2770 |
| | B | | mm | 470 | 390 | 455 | 455 |
| | C | | mm | 150 | 150 | 160 | 160 |
| | D | | mm | 25 | 25 | 50 | 50 |
| | E | | mm | 45 | 55 | 45 | 60 |
| | F | | mm | 53 | 34 | 53 | 34 |
| | G | | mm | 85 | 85 | 115 | 115 |
| | X | | mm | 1820 | 1820 | 2720 | 2720 |
| Inlet | | | ODF (4) | 1 1/8" | 1 1/8" | 1 3/8" | 1 3/8" |
| Outlet | | | ODF (4) | 7/8" | 1 1/8" | 1 1/8" | 1 1/8" |

** Ø 630 mm - 400 V/3/50-60 Hz - Δ : 190 W max - 0,5 A max (3) - Y : 90 W max - 0,2 A max (3)*

*(1) Sound pressure level in dB(A), obtained in compliance with standard NF EN 13487 (parallelepiped reference surface).*
*(2) Sound pressure level in dB(A) measured at 10 m, line of sight, on a reflective parallelepiped measurement surface, given for information only.*
*Values measured under nominal operating conditions with clean coils and rated voltage.*
*(3) Setting of overload protection levels.*
*(4) ODF = Female to receive a tube of the same diameter.*

| IRP | M60 | MM5* | M23 | M24 | BXT |
|---|---|---|---|---|---|
| O | O | O | - | O | O |

** Except for WA .. 12P - 16P*

HEATCRAFT™
Worldwide Refrigeration

# Axial fan condenser

EUROVENT CERTIFIED PERFORMANCE
www.eurovent-certification.com

E Solutions
Efficiency • Environment

## NEOSTAR range

### NEOSTAR POWER

The choice of PERFORMANCE and LOW SPACE REQUIREMENT.

- Capacity of up to 1,250 kW!
- Compactness: optimized heat exchange for reduced size.

### NEOSTAR SILENCE

The choice of EFFICIENCY and LOW NOISE.

- Low rotation speed motors with optimized electrical power consumption.
- Perfect incorporation in an urban environment, extremely quiet motors.
- An electronic switching motor (EC) is proposed as an optional extra for all models in this range.

*Energy efficiency*
*Low noise level*

18 ▁▂▃▄▅ 1250 kW

FRIGA-BOHN

HYFRA® PEDIA

HK® REFRIGERATION

Heatcraft reserves itself the right to make changes at any time without preliminary notice - Photos non-contractual

## Market segments

*FSM Hard Discount - Supermarkets - Hypermarkets*
*FCS Refrigerated storage and transit stocking - Dispatch centres - Food processing - Canteen kitchens*

**This NEOSTAR range is sub-divided into two product lines to better meet the needs expressed in the various application fields:**

## NEOSTAR POWER

### Master the power

**The "Power" range offers even more power in a space-saving unit. The power rating of this unit may be as high as 1,250 kW!**

**An electronic switching motor (EC) is proposed as an optional extra for all our models to help reduce the energy footprint of the user's installations. Indeed, use of this type of motor offers a very significant reduction in energy consumption for a given power rating.**
**For this reason, the NEOSTAR range has been accorded the "E-Solution" label.**

## NEOSTAR SILENCE

### Listen to the silence

**The "Silence" range is perfectly adapted to city centre commercial applications and all other applications where quiet operation is a key factor. In compliance with Eurovent standards the sound pressure level at 10 metres is as low as 19 dB(A) per module!**

## Description

### Casing

- The casing is made of galvanized, as well as pre-painted, galvanized sheet steel RAL 9002.
- The use of stainless steel screws guarantees excellent, long-lasting corrosion resistance (standard ISO 7253) and aesthetic quality.
- All components used have successfully passed the salt mist corrosion and Kesternich tests.
- The units are delivered screwed to a wooden base.
- Full crate packaging available as optional extra.

### Ventilation

- The NEOSTAR air condenser range is equipped as standard with 2-speed, external rotor fans (star or delta connections).

#### NEOSTAR POWER

- The NEOSTAR Power range is equipped with the following motor fan units:
- Ø 910 mm (PU) : 06P (D/Y) = 880/670 rpm,
- Ø 800 mm (PE) (heavy-duty motor) : 06P (D/Y) = 910/730 rpm,
- Ø 800 mm (PN) : 06P (D/Y) = 885/685 rpm.

#### NEOSTAR SILENCE

- The NEOSTAR Silence range is equipped with the following fan units:
- Ø 800 mm : 08P (D/Y) = 660/*485* rpm,
- Ø 800 mm : 12P (D/Y) = 435/*340* rpm,
- Ø 800 mm : 16P (D/Y) = 360/255 rpm.
- These enclosed motors are of the type 400V/3/50Hz, IP54, class F, compliant with standard EN 60529, permanently lubricated. Please contact us when the temperature exceeds 60°C.
- The motor fan units are wired as standard and factory connected as follows:
- 1 to 3 switching boxes for the models L (motors connected in line),
- 2 to 8 switching boxes for the models P (motors connected in parallel).
- We are also able to deliver the units unwired upon request (SCU option).
- Fan guards are compliant with safety standards.
- Fans units with special voltage ratings:
- M60: Fans 400 V/3/60Hz, IP54, class F, in version 06P Ø 910 mm
- M26: Fans 230 V/3/60Hz, IP54, class F, in version 06P Ø 910 mm
- M25: Fans 230 V/3/50Hz, IP54, class F, in version 06P and 12P Ø 800 mm.

### EC motor

- Electronic switching fan motors (EC) are also proposed as an optional extra and enable optimized operation of your installation. **This motor offers a reduction in energy consumption for a given power rating: a detailed comparison of the energy balance may be carried out for each project.**

### Coil

- The air condensers of the NEOSTAR range are equipped with a high-performance, finned coil designed with profiled aluminium fins crimped onto internally grooved copper tubes.
- For this latest generation of condensers, a new optimized fin has been specially designed to improve performance, efficiency and compactness of the units.
- Special coil coatings are available (Vinyl protection (**BAE**), Blygold Polual XT protection (**BXT**)) offering greater corrosion resistance when used in aggressive atmospheres.

### Selection software

- A wider selection of models is given in our software package to better meet your needs and expectations.

## Designation

# PE(1) 06(2)D(3) P(4)16(5) B3(6)

(1) **PN** (Power Normal) - **PE** (Power Extra) - **PU** (Power Ultra)
**SN** (Silence Normal) - **SE** (Silence Extra) - **SU** (Silence Ultra)
(2) Number of poles
(3) **D** = Delta connection - **Y** = Star connection
(4) Fan arrangement: **L** = fans in line - **P** = fans in parallel
(5) Number of fans
(6) Type of module

## Certifications

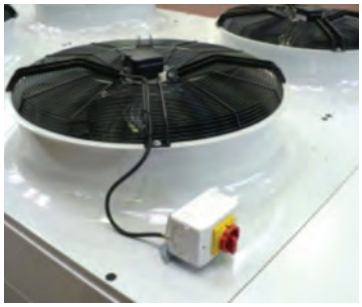

## Advantages

### Installation

Installation horizontal or vertical position as required: in case of installation with horizontal air flow, the predominant wind direction must be taken into consideration to avoid any risk of hot air recirculation.

Motors supplied factory wired and connected to reduce installation time.

Support legs extended up to 1,840 mm (optional) to meet installation requirements.

### Servicing / Maintenance

Unimpeded access to the coil rendering maintenance easier.

## Options

| Kit | Factory | |
|---|---|---|
| | | **Ventilation** |
| | M60 | Fans 400 V/3/60Hz (please contact us for details). |
| | M25 | Fans 230 V/3/50Hz (please contact us for details). |
| | M26 | Fans 230 V/3/60Hz (please contact us for details). |
| | MTH | Motors equipped with a protection thermostat. Recommended with frequent start sequences (more than 30 start sequences per hour) or when a speed controller is used. |
| | IRP | Rotary proximity switch(es). |
| | C2V | 2-speed factory wired in the switching box. |
| | SCU | Without factory wiring. To be indicated when ordering if the condenser unit is to be delivered unwired. |
| | | **Coil** |
| | MCI | Multi-circuits. |
| | BAE | Vinyl protection of fins. |
| | BXT | Blygold Polual XT protection of fins (please contact us). |
| | | **Casing** |
| | RAL | Special colours. |
| | REH | Legs extended by 240 mm (legs = 800 mm) |
| RE2 | | Legs extended by 840 mm (legs = 1,400 mm) |
| RE3 | | Legs extended by 1,340 mm (legs = 1,900 mm) |
| RE4 | | Legs extended by 1,840 mm (legs = 2,400 mm) |
| | ECB | Full crate packaging. |
| | | **Protection and control enclosure** |
| | MEC | Condensation pressure control with speed variation using an electronic switching motor (EC). |
| | CMP | Motor protection cabinet. |
| | RP1 | CMP + condensation pressure control with cascade stoppage of fans. |
| | RP2 | CMP + condensation pressure control with speed variation (voltage). |
| | RP3 | CMP + condensation pressure control with speed variation (frequency). |
| MSK | | Floor mounting kit. |
| | | **Other options** |
| | | Please contact us for details. |

| NEOSTAR POWER | Capacity (1) DT1 = 15K | Ventilation | | | Total length | Ventilation | | | | | Coil | | Connections | | | Net weight |
|---|---|---|---|---|---|---|---|---|---|---|---|---|---|---|---|---|
| | kW | Acoustic Lp (2) dB(A) | Total number of fans | Fan arrangement | mm | Air flow $m^3/h$ | True input power (3) W total | Fans Ø mm | Energy efficiency class | Acoustic Lw dB(A) | Surface $m^2$ | Circuit volume $dm^3$ | Inlet / Outlet* Ø mm | Same side | Opposite sides | kg |
| PE 06D L01 A1 | 40,9 | 53 | 1 | • | 1512 | 21077 | 2277 | 800 | E | 85 | 67 | 9,2 | 7/8" | X | - | 151 |
| PU 06D L01 A1 | 43,4 | 56 | 1 | • | 1512 | 23930 | 2258 | 910 | E | 88 | 67 | 9,2 | 7/8" | X | - | 153 |
| PN 06D L01 A2 | 50,2 | 48 | 1 | • | 1512 | 17703 | 1698 | 800 | E | 80 | 101 | 13,8 | 7/8" | X | - | 162 |
| PE 06D L01 A2 | 52,1 | 53 | 1 | • | 1512 | 18955 | 2362 | 800 | E | 85 | 101 | 13,8 | 7/8" | X | - | 162 |
| PU 06D L01 A2 | 55,5 | 56 | 1 | • | 1512 | 21310 | 2373 | 910 | E | 88 | 101 | 13,8 | 7/8" | X | - | 164 |
| PE 06D L01 B2 | 60,5 | 53 | 1 | • | 1842 | 20878 | 2285 | 800 | E | 85 | 126 | 17,3 | 7/8" | X | - | 181 |
| PU 06D L01 B2 | 65,1 | 56 | 1 | • | 1842 | 23688 | 2269 | 910 | E | 88 | 126 | 17,3 | 7/8" | X | - | 183 |
| PE 06D L01 B3 | 68,5 | 53 | 1 | • | 1842 | 19388 | 2345 | 800 | E | 85 | 168 | 23,1 | 1"1/8 | X | - | 196 |
| PE 06D L01 D2 | 71,5 | 53 | 1 | • | 2312 | 22713 | 2219 | 800 | D | 85 | 168 | 23,1 | 7/8" | X | - | 208 |
| PU 06D L01 B3 | 74,0 | 56 | 1 | • | 1842 | 21853 | 2350 | 910 | D | 88 | 168 | 23,1 | 1"1/8 | X | - | 198 |
| PU 06D L01 D2 | 77,5 | 56 | 1 | • | 2312 | 25922 | 2165 | 910 | D | 88 | 168 | 23,1 | 7/8" | X | - | 210 |
| PN 06D L02 A1 | 78,4 | 51 | 2 | •• | 2712 | 38570 | 3233 | 800 | E | 83 | 135 | 18,5 | 7/8" | X | - | 255 |
| PN 06D P02 A1 | 78,4 | 51 | 2 | : | 1512 | 38570 | 3233 | 800 | E | 83 | 135 | 18,5 | 2x7/8" | X | - | 269 |
| PE 06D L02 A1 | 81,7 | 56 | 2 | •• | 2712 | 42154 | 4553 | 800 | E | 88 | 135 | 18,5 | 7/8" | X | - | 255 |
| PE 06D P02 A1 | 81,7 | 56 | 2 | : | 1512 | 42154 | 4553 | 800 | E | 88 | 135 | 18,5 | 2x7/8" | X | - | 269 |
| PU 06D L02 A1 | 86,8 | 59 | 2 | •• | 2712 | 47860 | 4516 | 910 | E | 91 | 135 | 18,5 | 7/8" | X | - | 259 |
| PU 06D P02 A1 | 86,8 | 59 | 2 | : | 1512 | 47860 | 4516 | 910 | E | 91 | 135 | 18,5 | 2x7/8" | X | - | 273 |
| PU 06D L01 D3 | 88,4 | 56 | 1 | • | 2312 | 24640 | 2226 | 910 | D | 88 | 224 | 30,8 | 1"1/8 | X | - | 228 |
| PE 06D L02 B1 | 95,3 | 56 | 2 | •• | 3342 | 45014 | 4452 | 800 | E | 88 | 168 | 23,1 | 1"1/8 | X | - | 283 |
| PE 06D P02 B1 | 95,3 | 56 | 2 | : | 1842 | 45014 | 4452 | 800 | E | 88 | 168 | 23,1 | 2x7/8" | X | - | 293 |
| PN 06D L02 A2 | 100,3 | 51 | 2 | •• | 2712 | 35407 | 3396 | 800 | E | 83 | 202 | 27,7 | 1"1/8 | X | - | 276 |
| PN 06D P02 A2 | 100,3 | 51 | 2 | : | 1512 | 35407 | 3396 | 800 | E | 83 | 202 | 27,7 | 2x7/8" | X | - | 291 |
| PE 06D L02 A2 | 104,2 | 56 | 2 | •• | 2712 | 37911 | 4724 | 800 | E | 88 | 202 | 27,7 | 1"1/8 | X | - | 276 |
| PE 06D P02 A2 | 104,2 | 56 | 2 | : | 1512 | 37911 | 4724 | 800 | E | 88 | 202 | 27,7 | 2x7/8" | X | - | 291 |
| PU 06D L02 A2 | 111,0 | 59 | 2 | •• | 2712 | 42620 | 4746 | 910 | E | 91 | 202 | 27,7 | 1"1/8 | X | - | 280 |
| PE 06D L02 D1 | 112,6 | 56 | 2 | •• | 4312 | 47692 | 4334 | 800 | E | 88 | 224 | 30,8 | 1"1/8 | X | - | 339 |
| PE 06D P02 D1 | 112,6 | 56 | 2 | : | 2312 | 47692 | 4334 | 800 | E | 88 | 224 | 30,8 | 2x7/8" | X | - | 318 |
| PN 06D L02 B2 | 115,1 | 51 | 2 | •• | 3342 | 38273 | 3249 | 800 | D | 83 | 252 | 34,6 | 1"1/8 | X | - | 309 |
| PN 06D P02 B2 | 115,1 | 51 | 2 | : | 1842 | 38273 | 3249 | 800 | D | 83 | 252 | 34,6 | 2x7/8" | X | - | 323 |
| PE 06D L02 B2 | 121,1 | 56 | 2 | •• | 3342 | 41757 | 4569 | 800 | E | 88 | 252 | 34,6 | 1"1/8 | X | - | 309 |
| PE 06D P02 B2 | 121,1 | 56 | 2 | : | 1842 | 41757 | 4569 | 800 | E | 88 | 252 | 34,6 | 2x7/8" | X | - | 323 |
| PU 06D L02 D1 | 121,2 | 59 | 2 | •• | 4312 | 54675 | 4181 | 910 | E | 91 | 224 | 30,8 | 1"1/8 | X | - | 343 |
| PU 06D P02 D1 | 121,2 | 59 | 2 | : | 2312 | 54675 | 4181 | 910 | E | 91 | 224 | 30,8 | 2x7/8" | X | - | 322 |
| PU 06D L02 B2 | 130,3 | 59 | 2 | •• | 3342 | 47376 | 4538 | 910 | E | 91 | 252 | 34,6 | 1"1/8 | X | - | 313 |
| PU 06D P02 B2 | 130,3 | 59 | 2 | : | 1842 | 47376 | 4538 | 910 | E | 91 | 252 | 34,6 | 2x7/8" | X | - | 327 |
| PN 06D P02 D2 | 134,7 | 51 | 2 | : | 2312 | 41069 | 3120 | 800 | D | 83 | 336 | 46,1 | 2x7/8" | X | - | 358 |
| PE 06D L02 B3 | 137,0 | 56 | 2 | •• | 3342 | 38776 | 4689 | 800 | E | 88 | 336 | 46,1 | 1"1/8 | X | - | 337 |
| PE 06D P02 D2 | 143,0 | 56 | 2 | : | 2312 | 45425 | 4437 | 800 | D | 88 | 336 | 46,1 | 2x7/8" | X | - | 358 |
| PU 06D L02 B3 | 148,1 | 59 | 2 | •• | 3342 | 43706 | 4699 | 910 | D | 91 | 336 | 46,1 | 1"1/8 | X | - | 341 |
| PU 06D P02 B3 | 148,1 | 59 | 2 | : | 1842 | 43706 | 4699 | 910 | D | 91 | 336 | 46,1 | 2x1"1/8 | X | - | 354 |
| PU 06D L02 D2 | 154,9 | 59 | 2 | •• | 4312 | 51845 | 4329 | 910 | D | 91 | 336 | 46,1 | 1"3/8 | X | - | 378 |
| PU 06D P02 D2 | 154,9 | 59 | 2 | : | 2312 | 51845 | 4329 | 910 | D | 91 | 336 | 46,1 | 2x7/8" | X | - | 362 |
| PE 06D L03 A2 | 156,3 | 58 | 3 | ••• | 3912 | 56866 | 7086 | 800 | E | 90 | 303 | 41,5 | 1"3/8 | X | - | 396 |
| PU 06D L02 B4 | 156,5 | 59 | 2 | •• | 3342 | 40310 | 4830 | 910 | D | 91 | 420 | 57,7 | 1"3/8 | X | - | 369 |
| PE 06D P02 D3 | 162,6 | 56 | 2 | : | 2312 | 43323 | 4511 | 800 | D | 88 | 448 | 61,5 | 2x1"1/8 | X | - | 393 |
| PU 06D L03 A2 | 166,5 | 61 | 3 | ••• | 3912 | 63929 | 7119 | 910 | E | 93 | 303 | 41,5 | 1"3/8 | X | - | 402 |
| PN 06D L03 B2 | 172,7 | 53 | 3 | ••• | 4842 | 57409 | 4873 | 800 | D | 85 | 378 | 51,9 | 1"3/8 | X | - | 450 |
| PU 06D L02 D3 | 176,7 | 59 | 2 | •• | 4312 | 49280 | 4452 | 910 | D | 91 | 448 | 61,5 | 1"3/8 | X | - | 413 |
| PU 06D P02 D3 | 176,7 | 59 | 2 | : | 2312 | 49280 | 4452 | 910 | D | 91 | 448 | 61,5 | 2x1"1/8 | X | - | 397 |
| PE 06D L03 B2 | 181,6 | 58 | 3 | ••• | 4842 | 62635 | 6854 | 800 | E | 90 | 378 | 51,9 | 1"3/8 | X | - | 450 |
| PU 06D L03 B2 | 195,4 | 61 | 3 | ••• | 4842 | 71064 | 6807 | 910 | E | 93 | 378 | 51,9 | 1"3/8 | X | - | 456 |
| PN 06D L04 A2 | 200,6 | 54 | 4 | •••• | 5112 | 70814 | 6792 | 800 | E | 86 | 404 | 55,4 | 1"5/8 | X | - | 508 |
| PN 06D P04 A2 | 200,6 | 54 | 4 | :: | 2712 | 70814 | 6792 | 800 | E | 86 | 404 | 55,4 | 2x1"1/8 | X | - | 510 |
| PE 06D L03 B3 | 205,4 | 58 | 3 | ••• | 4842 | 58164 | 7034 | 800 | E | 90 | 505 | 69,2 | 1"5/8 | X | - | 488 |
| PE 06D L04 A2 | 208,4 | 59 | 4 | •••• | 5112 | 75822 | 9448 | 800 | E | 91 | 404 | 55,4 | 1"5/8 | X | - | 508 |
| PE 06D P04 A2 | 208,4 | 59 | 4 | :: | 2712 | 75822 | 9448 | 800 | E | 91 | 404 | 55,4 | 2x1"1/8 | X | - | 510 |
| PE 06D L03 D2 | 214,5 | 58 | 3 | ••• | 6312 | 68138 | 6656 | 800 | D | 90 | 505 | 69,2 | 1"5/8 | X | - | 540 |
| PU 06D P04 A2 | 222,0 | 62 | 4 | :: | 2712 | 85239 | 9492 | 910 | E | 94 | 404 | 55,4 | 2x1"1/8 | X | - | 518 |
| PU 06D L03 B3 | 222,1 | 61 | 3 | ••• | 4842 | 65558 | 7049 | 910 | D | 93 | 505 | 69,2 | 1"5/8 | X | - | 494 |
| PN 06D L04 B2 | 230,2 | 54 | 4 | •••• | 6342 | 76546 | 6498 | 800 | D | 86 | 505 | 69,2 | 1"5/8 | X | - | 579 |
| PN 06D P04 B2 | 230,2 | 54 | 4 | :: | 3342 | 76546 | 6498 | 800 | D | 86 | 505 | 69,2 | 2x1"1/8 | X | - | 564 |
| PU 06D L03 D2 | 232,4 | 61 | 3 | ••• | 6312 | 77767 | 6494 | 910 | D | 93 | 505 | 69,2 | 1"5/8 | X | - | 546 |
| PU 06D L03 B4 | 234,7 | 61 | 3 | ••• | 4842 | 60466 | 7245 | 910 | D | 93 | 631 | 86,5 | 1"5/8 | X | - | 534 |
| PE 06D L04 B2 | 242,1 | 59 | 4 | •••• | 6342 | 83513 | 9139 | 800 | E | 91 | 505 | 69,2 | 1"5/8 | X | - | 579 |
| PE 06D P04 B2 | 242,1 | 59 | 4 | :: | 3342 | 83513 | 9139 | 800 | E | 91 | 505 | 69,2 | 2x1"1/8 | X | - | 564 |
| PU 06D L04 A3 | 248,8 | 62 | 4 | •••• | 5112 | 76090 | 9813 | 910 | E | 94 | 538 | 73,8 | 1"5/8 | X | - | 558 |
| PU 06D P04 A3 | 248,8 | 62 | 4 | :: | 2712 | 76090 | 9813 | 910 | E | 94 | 538 | 73,8 | 2x1"1/8 | X | - | 561 |
| PU 06D L04 B2 | 260,5 | 62 | 4 | •••• | 6342 | 94752 | 9076 | 910 | E | 94 | 505 | 69,2 | 1"5/8 | X | - | 587 |
| PU 06D P04 B2 | 260,5 | 62 | 4 | :: | 3342 | 94752 | 9076 | 910 | E | 94 | 505 | 69,2 | 2x1"1/8 | X | - | 572 |
| PU 06D L03 D3 | 265,1 | 61 | 3 | ••• | 6312 | 73920 | 6679 | 910 | D | 93 | 673 | 92,3 | 1"5/8 | X | - | 598 |
| PE 06D P04 B3 | 273,9 | 59 | 4 | :: | 3342 | 77552 | 9378 | 800 | E | 91 | 673 | 92,3 | 2x1"1/8 | X | - | 618 |
| PU 06D L05 A2 | 277,5 | 63 | 5 | ••••• | 6312 | 106549 | 11865 | 910 | E | 95 | 505 | 69,2 | 1"5/8 | X | - | 641 |
| PE 06D L04 D2 | 286,1 | 59 | 4 | •••• | 8438 | 90851 | 8874 | 800 | D | 91 | 673 | 92,3 | 1"5/8 | - | X | 711 |
| PU 06D L04 B3 | 296,1 | 62 | 4 | •••• | 6342 | 87411 | 9398 | 910 | D | 94 | 673 | 92,3 | 1"5/8 | X | - | 639 |

# NEOSTAR POWER - Axial fan condenser

| NEOSTAR POWER | Capacity (1) DT1 = 15K kW | Ventilation: Acoustic Lp (2) dB(A) | Ventilation: Total number of fans | Ventilation: Fan arrangement | Total length mm | Ventilation: Air flow m³/h | Ventilation: True input power (3) W total | Ventilation: Fans Ø mm | Ventilation: Energy efficiency class | Ventilation: Acoustic Lw dB(A) | Coil: Surface m² | Coil: Circuit volume dm³ | Connections: Inlet / Outlet* Ø mm | Connections: Same side | Connections: Opposite sides | Net weight kg |
|---|---|---|---|---|---|---|---|---|---|---|---|---|---|---|---|---|
| PU 06D P04 B3 | 296,1 | 62 | 4 | ⁘ | 3342 | 87411 | 9398 | 910 | D | 94 | 673 | 92,3 | 2x1"1/8 | X | - | 626 |
| PE 06D L05 B2 | 302,7 | 60 | 5 | ••••• | 7998 | 104392 | 11424 | 800 | E | 92 | 631 | 86,5 | 1"5/8 | - | X | 725 |
| PU 06D L04 D2 | 309,9 | 62 | 4 | •••• | 8438 | 103690 | 8658 | 910 | D | 94 | 673 | 92,3 | 1"5/8 | - | X | 719 |
| PU 06D P04 D2 | 309,9 | 62 | 4 | ⁘ | 4312 | 103690 | 8658 | 910 | D | 94 | 673 | 92,3 | 2x1"3/8 | X | - | 654 |
| PU 06D P04 B4 | 312,9 | 62 | 4 | ⁘ | 3342 | 80621 | 9660 | 910 | D | 94 | 841 | 115,4 | 2x1"3/8 | X | - | 679 |
| PU 06D L05 B2 | 325,7 | 63 | 5 | ••••• | 7998 | 118440 | 11345 | 910 | E | 95 | 631 | 86,5 | 1"5/8 | - | X | 735 |
| PU 06D L06 A2 | 333,0 | 64 | 6 | •••••• | 7512 | 127859 | 14238 | 910 | E | 96 | 605 | 83,1 | 2"1/8 | X | - | 763 |
| PU 06D P06 A2 | 333,0 | 64 | 6 | ⁝⁝⁝ | 3912 | 127859 | 14238 | 910 | E | 96 | 605 | 83,1 | 2x1"3/8 | X | - | 747 |
| PE 06D L05 B3 | 342,4 | 60 | 5 | ••••• | 7842 | 96940 | 11723 | 800 | E | 92 | 841 | 115,4 | 2"1/8 | X | - | 793 |
| PN 06D P06 B2 | 345,4 | 56 | 6 | ⁝⁝⁝ | 4842 | 114819 | 9746 | 800 | D | 88 | 757 | 103,8 | 2x1"3/8 | X | - | 815 |
| PU 06D L04 D3 | 353,5 | 62 | 4 | •••• | 8312 | 98560 | 8905 | 910 | D | 94 | 897 | 123,0 | 2"1/8 | X | - | 792 |
| PU 06D P04 D3 | 353,5 | 62 | 4 | ⁘ | 4312 | 98560 | 8905 | 910 | D | 94 | 897 | 123,0 | 2x1"3/8 | X | - | 725 |
| PE 06D P06 B2 | 363,2 | 61 | 6 | ⁝⁝⁝ | 4842 | 125270 | 13708 | 800 | E | 93 | 757 | 103,8 | 2x1"3/8 | X | - | 815 |
| PU 06D L05 B3 | 370,2 | 63 | 5 | ••••• | 7842 | 109264 | 11748 | 910 | D | 95 | 841 | 115,4 | 2"1/8 | X | - | 803 |
| PU 06D L06 A3 | 373,2 | 64 | 6 | •••••• | 7512 | 114135 | 14719 | 910 | E | 96 | 807 | 110,7 | 2"1/8 | X | - | 828 |
| PU 06D P06 B2 | 390,8 | 64 | 6 | ⁝⁝⁝ | 4842 | 142128 | 13614 | 910 | E | 96 | 757 | 103,8 | 2x1"3/8 | X | - | 827 |
| PU 06D L05 B4 | 391,2 | 63 | 5 | ••••• | 7842 | 100776 | 12075 | 910 | D | 95 | 1051 | 144,2 | 2"1/8 | X | - | 867 |
| PN 06D P08 A2 | 401,3 | 57 | 8 | ⁝⁝⁝⁝ | 5112 | 141628 | 13584 | 800 | E | 89 | 807 | 110,7 | 2x1"5/8 | X | - | 950 |
| PE 06D P08 A2 | 416,7 | 62 | 8 | ⁝⁝⁝⁝ | 5112 | 151644 | 18896 | 800 | E | 94 | 807 | 110,7 | 2x1"5/8 | X | - | 950 |
| PU 06D P06 B3 | 444,2 | 64 | 6 | ⁝⁝⁝ | 4842 | 131117 | 14097 | 910 | D | 96 | 1009 | 138,4 | 2x1"5/8 | X | - | 906 |
| PU 06D P06 D2 | 464,8 | 64 | 6 | ⁝⁝⁝ | 6312 | 155535 | 12987 | 910 | D | 96 | 1009 | 138,4 | 2x1"5/8 | X | - | 946 |
| PU 06D P06 B4 | 469,4 | 64 | 6 | ⁝⁝⁝ | 4842 | 120931 | 14490 | 910 | D | 96 | 1261 | 173,0 | 2x1"5/8 | X | - | 984 |
| PE 06D P08 B2 | 484,3 | 62 | 8 | ⁝⁝⁝⁝ | 6342 | 167027 | 18278 | 800 | E | 94 | 1009 | 138,4 | 2x1"5/8 | X | - | 1057 |
| PU 06D P08 A3 | 497,6 | 65 | 8 | ⁝⁝⁝⁝ | 5112 | 152180 | 19626 | 910 | E | 97 | 1076 | 147,7 | 2x1"5/8 | X | - | 1051 |
| PU 06D P08 B2 | 521,1 | 65 | 8 | ⁝⁝⁝⁝ | 6342 | 189504 | 18152 | 910 | E | 97 | 1009 | 138,4 | 2x1"5/8 | X | - | 1073 |
| PU 06D P06 D3 | 530,2 | 64 | 6 | ⁝⁝⁝ | 6312 | 147840 | 13357 | 910 | D | 96 | 1345 | 184,6 | 2x1"5/8 | X | - | 1054 |
| PU 06D P10 A2 | 555,0 | 66 | 10 | ⁝⁝⁝⁝⁝ | 6312 | 213098 | 23730 | 910 | E | 98 | 1009 | 138,4 | 2x1"5/8 | X | - | 1198 |
| PU 06D P06 D4 | 567,2 | 64 | 6 | ⁝⁝⁝ | 6312 | 140606 | 13683 | 910 | D | 96 | 1682 | 230,7 | 2x1"5/8 | X | - | 1162 |
| PN 06D P10 B2 | 575,6 | 58 | 10 | ⁝⁝⁝⁝⁝ | 7998 | 191365 | 16244 | 800 | D | 90 | 1261 | 173,0 | 2x1"5/8 | - | X | 1317 |
| PU 06D P08 B3 | 592,3 | 65 | 8 | ⁝⁝⁝⁝ | 6342 | 174823 | 18797 | 910 | D | 97 | 1346 | 184,6 | 2x1"5/8 | X | - | 1185 |
| PN 06D P12 A2 | 601,9 | 59 | 12 | ⁝⁝⁝⁝⁝⁝ | 7512 | 212441 | 20376 | 800 | E | 91 | 1211 | 166,1 | 2x2"1/8 | X | - | 1403 |
| PU 06D P08 D2 | 619,7 | 65 | 8 | ⁝⁝⁝⁝ | 8438 | 207380 | 17317 | 910 | D | 97 | 1345 | 184,6 | 2x1"5/8 | - | X | 1244 |
| PU 06D P10 A3 | 622,0 | 66 | 10 | ⁝⁝⁝⁝⁝ | 6312 | 190225 | 24532 | 910 | E | 98 | 1345 | 184,6 | 2x1"5/8 | X | - | 1309 |
| PU 06D P10 B2 | 651,3 | 66 | 10 | ⁝⁝⁝⁝⁝ | 7998 | 236881 | 22690 | 910 | E | 98 | 1261 | 173,0 | 2x1"5/8 | - | X | 1337 |
| PU 06D P12 A2 | 666,0 | 67 | 12 | ⁝⁝⁝⁝⁝⁝ | 7512 | 255718 | 28477 | 910 | E | 99 | 1211 | 166,1 | 2x2"1/8 | X | - | 1427 |
| PN 06D P12 A3 | 678,0 | 59 | 12 | ⁝⁝⁝⁝⁝⁝ | 7512 | 195390 | 21209 | 800 | D | 91 | 1615 | 221,5 | 2x2"1/8 | X | - | 1534 |
| PN 06D P12 B2 | 690,7 | 59 | 12 | ⁝⁝⁝⁝⁝⁝ | 9498 | 229638 | 19493 | 800 | D | 91 | 1514 | 207,6 | 2x2"1/8 | - | X | 1571 |
| PN 06D P14 A2 | 702,2 | 59 | 14 | ⁝⁝⁝⁝⁝⁝⁝ | 8838 | 247848 | 23772 | 800 | E | 91 | 1413 | 193,8 | 2x2"1/8 | - | X | 1603 |
| PU 06D P08 D3 | 706,9 | 65 | 8 | ⁝⁝⁝⁝ | 8312 | 197120 | 17810 | 910 | D | 97 | 1794 | 246,1 | 2x2"1/8 | X | - | 1390 |
| PE 06D P10 D2 | 715,1 | 63 | 10 | ⁝⁝⁝⁝⁝ | 10438 | 227126 | 22186 | 800 | D | 95 | 1682 | 230,7 | 2x2"1/8 | - | X | 1524 |
| PE 06D P12 B2 | 726,4 | 64 | 12 | ⁝⁝⁝⁝⁝⁝ | 9498 | 250540 | 27417 | 800 | E | 96 | 1514 | 207,6 | 2x2"1/8 | - | X | 1571 |
| PU 06D P10 B3 | 740,3 | 66 | 10 | ⁝⁝⁝⁝⁝ | 7842 | 218528 | 23496 | 910 | D | 98 | 1682 | 230,7 | 2x2"1/8 | X | - | 1474 |
| PU 06D P12 A3 | 746,4 | 67 | 12 | ⁝⁝⁝⁝⁝⁝ | 7512 | 228270 | 29439 | 910 | E | 99 | 1615 | 221,5 | 2x2"1/8 | X | - | 1558 |
| PU 06D P10 D2 | 774,7 | 66 | 10 | ⁝⁝⁝⁝⁝ | 10438 | 259224 | 21646 | 910 | D | 98 | 1682 | 230,7 | 2x2"1/8 | - | X | 1544 |
| PU 06D P12 B2 | 781,6 | 67 | 12 | ⁝⁝⁝⁝⁝⁝ | 9498 | 284257 | 27228 | 910 | E | 99 | 1514 | 207,6 | 2x2"1/8 | - | X | 1595 |
| PU 06D P10 B4 | 782,3 | 66 | 10 | ⁝⁝⁝⁝⁝ | 7842 | 201552 | 24149 | 910 | D | 98 | 2102 | 288,4 | 2x2"1/8 | X | - | 1602 |
| PN 06D P14 B2 | 805,8 | 59 | 14 | ⁝⁝⁝⁝⁝⁝⁝ | 10998 | 267911 | 22741 | 800 | D | 91 | 1766 | 242,3 | 2x2"1/8 | - | X | 1833 |
| PE 06D P14 A3 | 817,5 | 64 | 14 | ⁝⁝⁝⁝⁝⁝⁝ | 8712 | 240485 | 34056 | 800 | E | 96 | 1884 | 258,4 | 2x2"1/8 | X | - | 1738 |
| PE 06D P12 B3 | 821,7 | 64 | 12 | ⁝⁝⁝⁝⁝⁝ | 9498 | 232655 | 28135 | 800 | E | 96 | 2018 | 276,9 | 2x2"1/8 | - | X | 1732 |
| PE 06D P14 B2 | 847,4 | 64 | 14 | ⁝⁝⁝⁝⁝⁝⁝ | 10998 | 292297 | 31986 | 800 | E | 96 | 1766 | 242,3 | 2x2"1/8 | - | X | 1833 |
| PU 06D P14 A3 | 870,8 | 67 | 14 | ⁝⁝⁝⁝⁝⁝⁝ | 8712 | 266315 | 34345 | 910 | E | 99 | 1884 | 258,4 | 2x2"1/8 | X | - | 1766 |
| PU 06D P12 B3 | 888,4 | 67 | 12 | ⁝⁝⁝⁝⁝⁝ | 9498 | 262234 | 28195 | 910 | D | 99 | 2018 | 276,9 | 2x2"1/8 | - | X | 1756 |
| PU 06D P14 B2 | 911,9 | 67 | 14 | ⁝⁝⁝⁝⁝⁝⁝ | 10998 | 331633 | 31767 | 910 | E | 99 | 1766 | 242,3 | 2x2"1/8 | - | X | 1861 |
| PU 06D P12 D2 | 929,6 | 67 | 12 | ⁝⁝⁝⁝⁝⁝ | 12312 | 311069 | 25975 | 910 | D | 99 | 2018 | 276,9 | 2x2"1/8 | X | - | 1839 |
| PU 06D P12 B4 | 938,8 | 67 | 12 | ⁝⁝⁝⁝⁝⁝ | 9342 | 241863 | 28979 | 910 | D | 99 | 2523 | 346,1 | 2x2"1/8 | X | - | 1909 |
| PE 06D P16 B2 | 968,5 | 65 | 16 | ⁝⁝⁝⁝⁝⁝⁝⁝ | 12342 | 334053 | 36556 | 800 | E | 97 | 2018 | 276,9 | 2x2"1/8 | X | - | 2078 |
| PU 06D P16 A3 | 995,2 | 68 | 16 | ⁝⁝⁝⁝⁝⁝⁝⁝ | 10038 | 304360 | 39252 | 910 | E | 100 | 2153 | 295,3 | 2x2"1/8 | - | X | 1963 |
| PU 06D P14 B3 | 1036,5 | 67 | 14 | ⁝⁝⁝⁝⁝⁝⁝ | 10998 | 305939 | 32894 | 910 | D | 99 | 2355 | 323,0 | 2x2"1/8 | - | X | 2039 |
| PU 06D P12 D3 | 1060,4 | 67 | 12 | ⁝⁝⁝⁝⁝⁝ | 12438 | 295680 | 26714 | 910 | D | 99 | 2691 | 369,1 | 2x2"1/8 | - | X | 2049 |
| PE 06D P16 B3 | 1095,6 | 65 | 16 | ⁝⁝⁝⁝⁝⁝⁝⁝ | 12498 | 310207 | 37514 | 800 | E | 97 | 2691 | 369,2 | 2x2"5/8 | - | X | 2280 |
| PU 06D P12 D4 | 1134,4 | 67 | 12 | ⁝⁝⁝⁝⁝⁝ | 12438 | 281213 | 27365 | 910 | D | 99 | 3364 | 461,4 | 2x2"5/8 | - | X | 2253 |
| PU 06D P16 B3 | 1184,5 | 68 | 16 | ⁝⁝⁝⁝⁝⁝⁝⁝ | 12498 | 349645 | 37593 | 910 | D | 100 | 2691 | 369,2 | 2x2"5/8 | - | X | 2312 |
| PU 06D P16 B4 | 1251,7 | 68 | 16 | ⁝⁝⁝⁝⁝⁝⁝⁝ | 12498 | 322483 | 38639 | 910 | D | 100 | 3364 | 461,4 | 2x2"5/8 | - | X | 2516 |

**PN 06D :** *880 rpm - 1940 W max. - 3,90 A max. (4)*
**PE 06D :** *910 rpm - 2650 W max. - 6,00 A max. (4)*
**PU 06D :** *885 rpm - 2650 W max. - 6,00 A max. (4)*
**PN 06Y :** *670 rpm - 1210 W max. - 2,23 A max. (4)*
**PE 06Y :** *730 rpm - 1650 W max. - 3,10 A max. (4)*
**PU 06Y :** *685 rpm - 1650 W max. - 3,10 A max. (4)*

*(1) Capacities are expressed in kW for R404A with DT1 = 15 K. They are equal to the capacities measured in accordance with standard CEN EN 327.*
*"DT1" represents the difference between the ambient air temperature and the condensation temperature considered equal at an equivalent condenser inlet pressure.*

*(2) Sound pressure level in dB(A) measured at 10 m, line of sight, on a reflective parallelepiped measurement surface, given for information only. Values measured under nominal operating conditions with clean coils and rated voltage.*
*(3) Power required for all motors.*
*(4) Setting of overload protection levels.*

| M60 | M25 | M26 | MTH | IRP | C2V | SCU | MCI | BAE | BXT | REH | RE .. | ECB | MEC | CMP | RP1 | RP2 | RP3 | MSK |
|---|---|---|---|---|---|---|---|---|---|---|---|---|---|---|---|---|---|---|
| +👤 | +👤 | +👤 | O | O | O | O | O | O | +👤 | O | O | O | O | O | O | O | O | O |

| NEOSTAR SILENCE | Capacity (1) DT1 = 15K | Ventilation | | | | Ventilation | | | | | Coil | | Connections | | | |
|---|---|---|---|---|---|---|---|---|---|---|---|---|---|---|---|---|
| | kW | Acoustic Lp (2) dB(A) | Total number of fans | Fan arrangement | Total length mm | Air flow $m^3/h$ | True input power (3) W total | Fans Ø mm | Energy efficiency class | Acoustic Lw dB(A) | Surface $m^2$ | Circuit volume $dm^3$ | Inlet / Outlet* Ø mm | Same side | Opposite sides | Net weight kg |
| SU 16Y L01 A1 | 17,9 | 19 | 1 | • | 8438 | 5 052 | 101 | 800 | A | 51 | 67 | 9,2 | 7/8" | X | - | 151 |
| SU 16Y L01 B1 | 20,5 | 19 | 1 | • | 7998 | 5 558 | 100 | 800 | A | 51 | 84 | 11,5 | 7/8" | X | - | 167 |
| SU 12Y L01 A1 | 22,7 | 26 | 1 | • | 7998 | 7 173 | 184 | 800 | A | 58 | 67 | 9,2 | 7/8" | X | - | 151 |
| SE 16D L01 A1 | 23,5 | 28 | 1 | • | 7998 | 7 599 | 209 | 800 | A | 60 | 67 | 9,2 | 7/8" | X | - | 151 |
| SU 16Y L01 D1 | 23,6 | 19 | 1 | • | 8438 | 6 069 | 99 | 800 | A | 51 | 112 | 15,4 | 7/8" | X | - | 188 |
| SU 12Y L01 B1 | 25,7 | 26 | 1 | • | 8438 | 7 776 | 180 | 800 | A | 58 | 84 | 11,5 | 7/8" | X | - | 167 |
| SU 16Y L01 D2 | 25,8 | 19 | 1 | • | 7998 | 5 634 | 99 | 800 | A | 51 | 168 | 23,1 | 7/8" | X | - | 208 |
| SE 12D L01 A1 | 26,1 | 32 | 1 | • | 7998 | 9 023 | 320 | 800 | B | 64 | 67 | 9,2 | 7/8" | X | - | 151 |
| SE 16D L01 B1 | 26,7 | 28 | 1 | • | 7998 | 8 203 | 205 | 800 | A | 60 | 84 | 11,5 | 7/8" | X | - | 167 |
| SE 12D L01 B1 | 29,5 | 32 | 1 | • | 8438 | 9 650 | 312 | 800 | B | 64 | 84 | 11,5 | 7/8" | X | - | 167 |
| SU 12Y L01 D1 | 29,7 | 26 | 1 | • | 7998 | 8 377 | 176 | 800 | A | 58 | 112 | 15,4 | 7/8" | X | - | 188 |
| SU 12Y L01 B3 | 30,3 | 26 | 1 | • | 8438 | 6 485 | 186 | 800 | A | 58 | 168 | 23,1 | 7/8" | X | - | 196 |
| SE 16D L01 B2 | 30,8 | 28 | 1 | • | 8438 | 7 517 | 210 | 800 | A | 60 | 126 | 17,3 | 7/8" | X | - | 181 |
| SN 08Y L01 B1 | 33,5 | 35 | 1 | • | 7998 | 11 874 | 522 | 800 | C | 67 | 84 | 11,5 | 7/8" | X | - | 167 |
| SN 08D L01 A1 | 33,7 | 40 | 1 | • | 7998 | 14 223 | 807 | 800 | D | 72 | 67 | 9,2 | 7/8" | X | - | 151 |
| SE 12D L01 D1 | 34,3 | 32 | 1 | • | 8438 | 10 287 | 303 | 800 | A | 64 | 112 | 15,4 | 7/8" | X | - | 188 |
| SE 16D L01 D2 | 35,5 | 28 | 1 | • | 7998 | 8 292 | 204 | 800 | A | 60 | 168 | 23,1 | 7/8" | X | - | 208 |
| SU 16Y L02 A1 | 35,8 | 22 | 2 | •• | 7998 | 10 103 | 202 | 800 | A | 54 | 135 | 18,5 | 7/8" | X | - | 255 |
| SU 16Y P02 A1 | 35,8 | 22 | 2 | : | 7998 | 10 103 | 202 | 800 | A | 54 | 135 | 18,5 | 2x7/8" | X | - | 269 |
| SN 08D L01 B1 | 38,5 | 40 | 1 | • | 9498 | 15 065 | 785 | 800 | C | 72 | 84 | 11,5 | 7/8" | X | - | 167 |
| SN 08Y L01 D1 | 39,3 | 35 | 1 | • | 7998 | 12 716 | 511 | 800 | B | 67 | 112 | 15,4 | 7/8" | X | - | 188 |
| SE 12D L01 D2 | 40,1 | 32 | 1 | • | 8438 | 9 744 | 311 | 800 | A | 64 | 168 | 23,1 | 7/8" | X | - | 208 |
| SN 08Y L01 B2 | 40,2 | 35 | 1 | • | 7998 | 10 888 | 531 | 800 | B | 67 | 126 | 17,3 | 7/8" | X | - | 181 |
| SU 16Y L02 B1 | 41,1 | 22 | 2 | •• | 7998 | 11 116 | 199 | 800 | A | 54 | 168 | 23,1 | 1"1/8 | X | - | 283 |
| SU 16Y P02 B1 | 41,1 | 22 | 2 | : | 7998 | 11 116 | 199 | 800 | A | 54 | 168 | 23,1 | 2x7/8" | X | - | 293 |
| SN 08D L01 A2 | 41,7 | 40 | 1 | • | 1099 | 12 969 | 843 | 800 | C | 72 | 101 | 13,8 | 7/8" | X | - | 162 |
| SU 12Y L02 A1 | 45,3 | 29 | 2 | •• | 8438 | 14 346 | 367 | 800 | A | 61 | 135 | 18,5 | 7/8" | X | - | 255 |
| SU 12Y P02 A1 | 45,3 | 29 | 2 | : | 7998 | 14 346 | 367 | 800 | A | 61 | 135 | 18,5 | 2x7/8" | X | - | 269 |
| SN 08Y L01 D2 | 46,9 | 35 | 1 | • | 7998 | 12 001 | 520 | 800 | B | 67 | 168 | 23,1 | 7/8" | X | - | 208 |
| SE 16D L02 A1 | 47,0 | 31 | 2 | •• | 1043 | 15 198 | 419 | 800 | A | 63 | 135 | 18,5 | 7/8" | X | - | 255 |
| SE 16D P02 A1 | 47,0 | 31 | 2 | : | 9498 | 15 198 | 419 | 800 | A | 63 | 135 | 18,5 | 2x7/8" | X | - | 269 |
| SU 16Y L02 D1 | 47,3 | 22 | 2 | •• | 8438 | 12 138 | 198 | 800 | A | 54 | 224 | 30,8 | 1"1/8 | X | - | 339 |
| SU 16Y P02 D1 | 47,3 | 22 | 2 | : | 1043 | 12 138 | 198 | 800 | A | 54 | 224 | 30,8 | 2x7/8" | X | - | 318 |
| SN 08D L01 B2 | 47,7 | 40 | 1 | • | 7998 | 14 107 | 811 | 800 | C | 72 | 126 | 17,3 | 7/8" | X | - | 181 |
| SU 12Y L02 B1 | 51,4 | 29 | 2 | •• | 9498 | 15 552 | 360 | 800 | A | 61 | 168 | 23,1 | 1"1/8 | X | - | 283 |
| SU 12Y P02 B1 | 51,4 | 29 | 2 | : | 8838 | 15 552 | 360 | 800 | A | 61 | 168 | 23,1 | 2x7/8" | X | - | 293 |
| SU 16Y L02 D2 | 51,6 | 22 | 2 | •• | 1099 | 11 268 | 199 | 800 | A | 54 | 336 | 46,1 | 1"3/8 | X | - | 374 |
| SU 16Y P02 D2 | 51,6 | 22 | 2 | : | 8438 | 11 268 | 199 | 800 | A | 54 | 336 | 46,1 | 2x7/8" | X | - | 358 |
| SE 12D L02 A1 | 52,2 | 35 | 2 | •• | 9498 | 18 045 | 641 | 800 | B | 67 | 135 | 18,5 | 7/8" | X | - | 255 |
| SE 12D P02 A1 | 52,2 | 35 | 2 | : | 7998 | 18 045 | 641 | 800 | B | 67 | 135 | 18,5 | 2x7/8" | X | - | 269 |
| SN 08D L01 B3 | 52,7 | 40 | 1 | • | 9498 | 13 231 | 835 | 800 | C | 72 | 168 | 23,1 | 7/8" | X | - | 196 |
| SE 16D L02 B1 | 53,5 | 31 | 2 | •• | 1003 | 16 406 | 410 | 800 | A | 63 | 168 | 23,1 | 1"1/8 | X | - | 283 |
| SE 16D P02 B1 | 53,5 | 31 | 2 | : | 1099 | 16 406 | 410 | 800 | A | 63 | 168 | 23,1 | 2x7/8" | X | - | 293 |
| SU 16Y L03 A1 | 53,7 | 24 | 3 | ••• | 1249 | 15 155 | 303 | 800 | A | 56 | 202 | 27,7 | 1"1/8 | X | - | 366 |
| SN 08D L01 D2 | 55,2 | 40 | 1 | • | 1003 | 15 188 | 782 | 800 | B | 72 | 168 | 23,1 | 7/8" | X | - | 208 |
| SU 12Y L02 B2 | 58,6 | 29 | 2 | •• | 9498 | 14 183 | 368 | 800 | A | 61 | 252 | 34,6 | 1"1/8 | X | - | 309 |
| SN 08Y L02 A1 | 58,7 | 38 | 2 | •• | 1099 | 22 014 | 1060 | 800 | C | 70 | 135 | 18,5 | 7/8" | X | - | 255 |
| SN 08Y P02 A1 | 58,7 | 38 | 2 | : | 9498 | 22 014 | 1060 | 800 | C | 70 | 135 | 18,5 | 2x7/8" | X | - | 269 |
| SE 12D L02 B1 | 59,1 | 35 | 2 | •• | 8838 | 19 300 | 624 | 800 | B | 67 | 168 | 23,1 | 1"1/8 | X | - | 283 |
| SE 12D P02 B1 | 59,1 | 35 | 2 | : | 1249 | 19 300 | 624 | 800 | B | 67 | 168 | 23,1 | 2x7/8" | X | - | 293 |
| SU 12Y P02 D1 | 59,5 | 29 | 2 | : | 1099 | 16 754 | 352 | 800 | A | 61 | 224 | 30,8 | 2x7/8" | X | - | 318 |
| SN 08D L01 D3 | 60,7 | 40 | 1 | • | 9498 | 14 564 | 798 | 800 | B | 72 | 224 | 30,8 | 1"1/8 | X | - | 226 |
| SE 16D P02 D1 | 61,5 | 31 | 2 | : | 1099 | 17 589 | 402 | 800 | A | 63 | 224 | 30,8 | 2x7/8" | X | - | 318 |
| SU 16Y L03 B1 | 61,6 | 24 | 3 | ••• | 1249 | 16 674 | 299 | 800 | A | 56 | 252 | 34,6 | 1"1/8 | X | - | 412 |
| SE 16D L02 B2 | 61,6 | 31 | 2 | •• | 1003 | 15 034 | 420 | 800 | A | 63 | 252 | 34,6 | 1"1/8 | X | - | 309 |
| SU 16Y L03 B2 | 66,8 | 24 | 3 | ••• | 1099 | 14 953 | 304 | 800 | A | 56 | 378 | 51,9 | 1"3/8 | X | - | 450 |
| SN 08Y L02 B1 | 67,1 | 38 | 2 | •• | 1249 | 23 748 | 1043 | 800 | C | 70 | 168 | 23,1 | 1"1/8 | X | - | 283 |
| SN 08Y P02 B1 | 67,1 | 38 | 2 | : | 1249 | 23 748 | 1043 | 800 | C | 70 | 168 | 23,1 | 2x7/8" | X | - | 293 |
| SN 08D L02 A1 | 67,4 | 43 | 2 | •• | 2712 | 28 446 | 1615 | 800 | D | 75 | 135 | 18,5 | 7/8" | X | - | 255 |
| SN 08D P02 A1 | 67,4 | 43 | 2 | : | 1512 | 28 446 | 1615 | 800 | D | 75 | 135 | 18,5 | 2x7/8" | X | - | 269 |

# NEOSTAR SILENCE - Axial fan condenser

| NEOSTAR SILENCE | Capacity (1) DT1 = 15K kW | Ventilation | | | Total length mm | Ventilation | | | | | Coil | | Connections | | | Net weight kg |
|---|---|---|---|---|---|---|---|---|---|---|---|---|---|---|---|---|
| | | Acoustic Lp (2) dB(A) | Total number of fans | Fan arrangement | | Air flow $m^3/h$ | True input power (3) W total | Fans Ø mm | Energy efficiency class | Acoustic Lw dB(A) | Surface $m^2$ | Circuit volume $dm^3$ | Inlet / Outlet* Ø mm | Same side | Opposite sides | |
| SU 12Y P02 D2 | 67,7 | 29 | 2 | : | 2312 | 15 731 | 359 | 800 | A | 61 | 336 | 46,1 | 2x7/8" | X | - | 358 |
| SU 12Y L03 A1 | 68,0 | 31 | 3 | ••• | 3912 | 21 520 | 551 | 800 | A | 63 | 202 | 27,7 | 1"1/8 | X | - | 366 |
| SE 12D P02 D1 | 68,5 | 35 | 2 | : | 2312 | 20 573 | 606 | 800 | A | 67 | 224 | 30,8 | 2x7/8" | X | - | 318 |
| SN 08Y L02 A2 | 69,3 | 38 | 2 | •• | 2712 | 19 476 | 1087 | 800 | C | 70 | 202 | 27,7 | 1"1/8 | X | - | 276 |
| SE 12D L02 B2 | 69,8 | 35 | 2 | •• | 3342 | 17 876 | 643 | 800 | B | 67 | 252 | 34,6 | 1"1/8 | X | - | 309 |
| SE 16D L03 A1 | 70,4 | 33 | 3 | ••• | 3912 | 22 797 | 628 | 800 | A | 65 | 202 | 27,7 | 1"1/8 | X | - | 366 |
| SE 16D P02 D2 | 71,1 | 31 | 2 | : | 2312 | 16 584 | 409 | 800 | A | 63 | 336 | 46,1 | 2x7/8" | X | - | 358 |
| SU 16Y L04 A1 | 71,6 | 25 | 4 | •••• | 5112 | 20 207 | 405 | 800 | A | 57 | 269 | 36,9 | 1"3/8 | X | - | 468 |
| SU 16Y P04 A1 | 71,6 | 25 | 4 | :: | 2712 | 20 207 | 405 | 800 | A | 57 | 269 | 36,9 | 2x7/8" | X | - | 468 |
| SN 08D L02 B1 | 77,0 | 43 | 2 | •• | 3342 | 30 130 | 1570 | 800 | C | 75 | 168 | 23,1 | 1"1/8 | X | - | 283 |
| SN 08D P02 B1 | 77,0 | 43 | 2 | : | 1842 | 30 130 | 1570 | 800 | C | 75 | 168 | 23,1 | 2x7/8" | X | - | 293 |
| SU 12Y L03 B1 | 77,1 | 31 | 3 | ••• | 4842 | 23 328 | 540 | 800 | A | 63 | 252 | 34,6 | 1"1/8 | X | - | 412 |
| SE 12D L03 A1 | 78,3 | 37 | 3 | ••• | 3912 | 27 068 | 961 | 800 | B | 69 | 202 | 27,7 | 1"1/8 | X | - | 366 |
| SN 08Y P02 D1 | 78,6 | 38 | 2 | : | 2312 | 25 431 | 1023 | 800 | B | 70 | 224 | 30,8 | 2x7/8" | X | - | 318 |
| SE 12D L02 D2 | 80,1 | 35 | 2 | •• | 4312 | 19 487 | 621 | 800 | A | 67 | 336 | 46,1 | 1"3/8 | X | - | 374 |
| SE 12D P02 D2 | 80,1 | 35 | 2 | : | 2312 | 19 487 | 621 | 800 | A | 67 | 336 | 46,1 | 2x7/8" | X | - | 358 |
| SE 16D L03 B1 | 80,2 | 33 | 3 | ••• | 4842 | 24 609 | 615 | 800 | A | 65 | 252 | 34,6 | 1"1/8 | X | - | 412 |
| SN 08Y L02 B2 | 80,4 | 38 | 2 | •• | 3342 | 21 776 | 1063 | 800 | B | 70 | 252 | 34,6 | 1"1/8 | X | - | 309 |
| SU 16Y L04 B1 | 82,1 | 25 | 4 | •••• | 6342 | 22 232 | 399 | 800 | A | 57 | 336 | 46,1 | 1"3/8 | X | - | 528 |
| SU 16Y P04 B1 | 82,1 | 25 | 4 | :: | 3342 | 22 232 | 399 | 800 | A | 57 | 336 | 46,1 | 2x1"1/8 | X | - | 513 |
| SN 08D L02 A2 | 83,4 | 43 | 2 | •• | 2712 | 25 938 | 1685 | 800 | C | 75 | 202 | 27,7 | 1"1/8 | X | - | 276 |
| SN 08D P02 A2 | 83,4 | 43 | 2 | : | 1512 | 25 938 | 1685 | 800 | C | 75 | 202 | 27,7 | 2x7/8" | X | - | 291 |
| SE 12D L02 D3 | 84,9 | 35 | 2 | •• | 4312 | 18 549 | 634 | 800 | A | 67 | 448 | 61,5 | 1"3/8 | X | - | 409 |
| SU 12Y L03 B2 | 87,9 | 31 | 3 | ••• | 4842 | 21 274 | 552 | 800 | A | 63 | 378 | 51,9 | 1"3/8 | X | - | 450 |
| SN 08Y L03 A1 | 88,0 | 40 | 3 | ••• | 3912 | 33 021 | 1591 | 800 | C | 72 | 202 | 27,7 | 1"1/8 | X | - | 366 |
| SE 12D L03 B1 | 88,6 | 37 | 3 | ••• | 4842 | 28 950 | 936 | 800 | B | 69 | 252 | 34,6 | 1"1/8 | X | - | 412 |
| SU 16Y P04 B2 | 89,1 | 25 | 4 | :: | 3342 | 19 937 | 405 | 800 | A | 57 | 505 | 69,2 | 2x1"1/8 | X | - | 564 |
| SU 16Y L05 A1 | 89,5 | 26 | 5 | ••••• | 6312 | 25 258 | 506 | 800 | A | 58 | 336 | 46,1 | 1"3/8 | X | - | 579 |
| SN 08D P02 D1 | 90,0 | 43 | 2 | : | 2312 | 31 780 | 1526 | 800 | C | 75 | 224 | 30,8 | 2x7/8" | X | - | 318 |
| SU 12Y L04 A1 | 90,6 | 32 | 4 | •••• | 5112 | 28 693 | 734 | 800 | A | 64 | 269 | 36,9 | 1"3/8 | X | - | 468 |
| SU 12Y P04 A1 | 90,6 | 32 | 4 | :: | 2712 | 28 693 | 734 | 800 | A | 64 | 269 | 36,9 | 2x7/8" | X | - | 468 |
| SE 12D L03 A2 | 91,5 | 37 | 3 | ••• | 3912 | 24 371 | 985 | 800 | B | 69 | 303 | 41,5 | 1"3/8 | X | - | 396 |
| SE 16D L03 B2 | 92,4 | 33 | 3 | ••• | 4842 | 22 551 | 630 | 800 | A | 65 | 378 | 51,9 | 1"3/8 | X | - | 450 |
| SN 08Y L02 D2 | 93,8 | 38 | 2 | •• | 4312 | 24 001 | 1041 | 800 | B | 70 | 336 | 46,1 | 1"3/8 | X | - | 374 |
| SN 08Y P02 D2 | 93,8 | 38 | 2 | : | 2312 | 24 001 | 1041 | 800 | B | 70 | 336 | 46,1 | 2x7/8" | X | - | 358 |
| SE 16D L04 A1 | 93,9 | 34 | 4 | •••• | 5112 | 30 396 | 838 | 800 | A | 66 | 269 | 36,9 | 1"3/8 | X | - | 468 |
| SE 16D P04 A1 | 93,9 | 34 | 4 | :: | 2712 | 30 396 | 838 | 800 | A | 66 | 269 | 36,9 | 2x7/8" | X | - | 468 |
| SU 16Y L04 D1 | 94,6 | 25 | 4 | •••• | 8438 | 24 275 | 396 | 800 | A | 57 | 448 | 61,5 | 1"3/8 | - | X | 641 |
| SU 16Y P04 D1 | 94,6 | 25 | 4 | :: | 4312 | 24 275 | 396 | 800 | A | 57 | 448 | 61,5 | 2x1"1/8 | X | - | 575 |
| SN 08D L02 B2 | 95,5 | 43 | 2 | •• | 3342 | 28 215 | 1621 | 800 | C | 75 | 252 | 34,6 | 1"1/8 | X | - | 309 |
| SN 08D P02 B2 | 95,5 | 43 | 2 | : | 1842 | 28 215 | 1621 | 800 | C | 75 | 252 | 34,6 | 2x7/8" | X | - | 323 |
| SU 16Y L05 A2 | 96,2 | 26 | 5 | ••••• | 6312 | 21 862 | 509 | 800 | A | 58 | 505 | 69,2 | 1"5/8 | X | - | 631 |
| SN 08Y L03 B1 | 100,6 | 40 | 3 | ••• | 4842 | 35 621 | 1565 | 800 | C | 72 | 252 | 34,6 | 1"1/8 | X | - | 412 |
| SN 08Y L02 D3 | 100,8 | 38 | 2 | •• | 4312 | 22 717 | 1054 | 800 | B | 70 | 448 | 61,5 | 1"3/8 | X | - | 409 |
| SN 08D L03 A1 | 101,1 | 45 | 3 | ••• | 3912 | 42 669 | 2422 | 800 | D | 77 | 202 | 27,7 | 1"1/8 | X | - | 366 |
| SU 16Y L05 B1 | 102,6 | 26 | 5 | ••••• | 7998 | 27 790 | 499 | 800 | A | 58 | 420 | 57,7 | 1"3/8 | - | X | 661 |
| SU 12Y L04 B1 | 102,8 | 32 | 4 | •••• | 6342 | 31 104 | 720 | 800 | A | 64 | 336 | 46,1 | 1"3/8 | X | - | 528 |
| SU 12Y P04 B1 | 102,8 | 32 | 4 | :: | 3342 | 31 104 | 720 | 800 | A | 64 | 336 | 46,1 | 2x1"1/8 | X | - | 513 |
| SU 16Y P04 D2 | 103,2 | 25 | 4 | :: | 4312 | 22 535 | 398 | 800 | A | 57 | 673 | 92,3 | 2x1"3/8 | X | - | 646 |
| SN 08Y L03 A2 | 104,0 | 40 | 3 | ••• | 3912 | 29 213 | 1630 | 800 | C | 72 | 303 | 41,5 | 1"3/8 | X | - | 396 |
| SE 12D L04 A1 | 104,4 | 38 | 4 | •••• | 5112 | 36 091 | 1281 | 800 | B | 70 | 269 | 36,9 | 1"3/8 | X | - | 468 |
| SE 12D P04 A1 | 104,4 | 38 | 4 | :: | 2712 | 36 091 | 1281 | 800 | B | 70 | 269 | 36,9 | 2x7/8" | X | - | 468 |

**SN 08D :** *660 rpm - 990 W max. - 2,37 A max. (4)*
**SE 12D :** *435 rpm - 360 W max. - 1,12 A max. (4)*
**SE 16D :** *360 rpm - 235 W max. - 0,65 A max. (4)*
**SN 08Y :** *485 rpm - 580 W max. - 1,21 A max. (4)*
**SU 12Y :** *340 rpm - 200 W max. - 0,47 A max. (4)*
**SU 16Y :** *255 rpm - 105 W max. - 0,25 A max. (4)*

*(1) Capacities are expressed in kW for R404A with DT1 = 15 K. They are equal to the capacities measured in accordance with standard CEN EN 327. "DT1" represents the difference between the ambient air temperature and the condensation temperature considered equal at an equivalent condenser inlet pressure.*

*(2) Sound pressure level in dB(A) measured at 10 m, line of sight, on a reflective parallelepiped measurement surface, given for information only. Values measured under nominal operating conditions with clean coils and rated voltage.*
*(3) Power required for all motors.*
*(4) Setting of overload protection levels.*

| M60 | M25 | M26 | MTH | IRP | C2V | SCU | MCI | BAE | BXT | REH | RE .. | ECB | MEC | CMP | RP1 | RP2 | RP3 | MSK |
|---|---|---|---|---|---|---|---|---|---|---|---|---|---|---|---|---|---|---|
| +👤 | +👤 | +👤 | O | O | O | O | O | O | +👤 | O | O | O | O | O | O | O | O | O |

| NEOSTAR SILENCE | Capacity (1) DT1 = 15K | Ventilation | | | Total length | Ventilation | | | | | Coil | | Connections | | | Net weight |
|---|---|---|---|---|---|---|---|---|---|---|---|---|---|---|---|---|
| | kW | Acoustic Lp (2) dB(A) | Total number of fans | Fan arrangement | mm | Air flow m³/h | True input power (3) W total | Fans Ø mm | Energy efficiency class | Acoustic Lw dB(A) | Surface m² | Circuit volume dm³ | Inlet / Outlet* Ø mm | Same side | Opposite sides | kg |
| SE 12D L03 B2 | 104,7 | 37 | 3 | ••• | 4842 | 26 814 | 964 | 800 | B | 69 | 378 | 51,9 | 1"3/8 | X | - | 450 |
| SN 08D L02 B3 | 105,3 | 43 | 2 | •• | 3342 | 26 462 | 1671 | 800 | C | 75 | 336 | 46,1 | 1"1/8 | X | - | 337 |
| SU 12Y L03 D3 | 105,9 | 31 | 3 | ••• | 6312 | 22 249 | 546 | 800 | A | 63 | 673 | 92,3 | 1"1/8 | X | - | 592 |
| SE 16D L03 D2 | 106,6 | 33 | 3 | ••• | 6312 | 24 875 | 613 | 800 | A | 65 | 505 | 69,2 | 1"5/8 | X | - | 540 |
| SE 16D L04 B1 | 107,0 | 34 | 4 | •••• | 6342 | 32 811 | 821 | 800 | A | 66 | 336 | 46,1 | 1"3/8 | X | - | 528 |
| SE 16D P04 B1 | 107,0 | 34 | 4 | ⁝⁝ | 3342 | 32 811 | 821 | 800 | A | 66 | 336 | 46,1 | 2x1"1/8 | X | - | 513 |
| SU 16Y L06 A1 | 107,5 | 27 | 6 | •••••• | 7512 | 30 310 | 607 | 800 | A | 59 | 404 | 55,4 | 1"3/8 | X | - | 690 |
| SU 16Y P06 A1 | 107,5 | 27 | 6 | ⁝⁝⁝ | 3912 | 30 310 | 607 | 800 | A | 59 | 404 | 55,4 | 2x1"1/8 | X | - | 673 |
| SN 08D L02 D2 | 110,4 | 43 | 2 | •• | 4312 | 30 377 | 1563 | 800 | B | 75 | 336 | 46,1 | 1"3/8 | X | - | 374 |
| SN 08D P02 D2 | 110,4 | 43 | 2 | ⁝ | 2312 | 30 377 | 1563 | 800 | B | 75 | 336 | 46,1 | 2x7/8" | X | - | 358 |
| SU 16Y L05 B2 | 111,3 | 26 | 5 | ••••• | 7998 | 24 921 | 506 | 800 | A | 58 | 631 | 86,5 | 1"5/8 | - | X | 725 |
| SU 12Y L05 A1 | 113,3 | 33 | 5 | ••••• | 6312 | 35 866 | 918 | 800 | A | 65 | 336 | 46,1 | 1"3/8 | X | - | 579 |
| SU 16Y P06 A2 | 115,4 | 27 | 6 | ⁝⁝⁝ | 3912 | 26 235 | 611 | 800 | A | 59 | 605 | 83,1 | 2x1"3/8 | X | - | 735 |
| SN 08D L03 B1 | 115,6 | 45 | 3 | ••• | 4842 | 45 194 | 2355 | 800 | C | 77 | 252 | 34,6 | 1"1/8 | X | - | 412 |
| SU 12Y L04 B2 | 117,2 | 32 | 4 | •••• | 6342 | 28 365 | 736 | 800 | A | 64 | 505 | 69,2 | 1"5/8 | X | - | 579 |
| SU 12Y P04 B2 | 117,2 | 32 | 4 | ⁝⁝ | 3342 | 28 365 | 736 | 800 | A | 64 | 505 | 69,2 | 2x1"1/8 | X | - | 564 |
| SN 08Y L04 A1 | 117,3 | 41 | 4 | •••• | 5112 | 44 028 | 2121 | 800 | C | 73 | 269 | 36,9 | 1"3/8 | X | - | 468 |
| SN 08Y P04 A1 | 117,3 | 41 | 4 | ⁝⁝ | 2712 | 44 028 | 2121 | 800 | C | 73 | 269 | 36,9 | 2x7/8" | X | - | 468 |
| SE 16D L05 A1 | 117,4 | 35 | 5 | •••••• | 6312 | 37 996 | 1047 | 800 | A | 67 | 336 | 46,1 | 1"3/8 | X | - | 579 |
| SE 12D L04 B1 | 118,2 | 38 | 4 | •••• | 6342 | 38 599 | 1247 | 800 | B | 70 | 336 | 46,1 | 1"3/8 | X | - | 528 |
| SE 12D P04 B1 | 118,2 | 38 | 4 | ⁝⁝ | 3342 | 38 599 | 1247 | 800 | B | 70 | 336 | 46,1 | 2x1"1/8 | X | - | 513 |
| SE 12D L03 D2 | 120,2 | 37 | 3 | ••• | 6312 | 29 231 | 932 | 800 | A | 69 | 505 | 69,2 | 1"5/8 | X | - | 540 |
| SN 08Y L03 B2 | 120,6 | 40 | 3 | ••• | 4842 | 32 664 | 1594 | 800 | B | 72 | 378 | 51,9 | 1"3/8 | X | - | 450 |
| SU 12Y P04 B3 | 121,1 | 32 | 4 | ⁝⁝ | 3342 | 25 939 | 745 | 800 | A | 64 | 673 | 92,3 | 2x1"1/8 | X | - | 618 |
| SN 08D P02 D3 | 121,5 | 43 | 2 | ⁝ | 2312 | 29 129 | 1596 | 800 | B | 75 | 448 | 61,5 | 2x1"1/8 | X | - | 393 |
| SE 12D L04 A2 | 122,0 | 38 | 4 | ⁝⁝⁝⁝ | 5112 | 32 495 | 1314 | 800 | B | 70 | 404 | 55,4 | 1"1/8 | X | - | 508 |
| SE 12D P04 A2 | 122,0 | 38 | 4 | ⁝⁝ | 2712 | 32 495 | 1314 | 800 | B | 70 | 404 | 55,4 | 2x1"1/8 | X | - | 510 |
| SE 16D L04 B2 | 123,3 | 34 | 4 | •••• | 6342 | 30 068 | 840 | 800 | A | 66 | 505 | 69,2 | 1"5/8 | X | - | 579 |
| SE 16D P04 B2 | 123,3 | 34 | 4 | ⁝⁝ | 3342 | 30 068 | 840 | 800 | A | 66 | 505 | 69,2 | 2x1"1/8 | X | - | 564 |
| SN 08D L03 A2 | 125,2 | 45 | 3 | ••• | 3912 | 38 907 | 2528 | 800 | C | 77 | 303 | 41,5 | 1"3/8 | X | - | 396 |
| SU 12Y L05 A2 | 127,2 | 33 | 5 | ••••• | 6312 | 31 554 | 935 | 800 | A | 65 | 505 | 69,2 | 1"5/8 | X | - | 631 |
| SE 12D L05 A1 | 130,6 | 39 | 5 | ••••• | 6312 | 45 114 | 1601 | 800 | B | 71 | 336 | 46,1 | 1"3/8 | X | - | 579 |
| SE 16D L05 B1 | 133,7 | 35 | 5 | ••••• | 7998 | 41 014 | 1026 | 800 | A | 67 | 420 | 57,7 | 1"3/8 | - | X | 661 |
| SN 08Y L04 B1 | 134,1 | 41 | 4 | •••• | 6342 | 47 495 | 2087 | 800 | C | 73 | 336 | 46,1 | 1"3/8 | X | - | 528 |
| SN 08D L04 A1 | 134,8 | 46 | 4 | •••• | 5112 | 56 893 | 3230 | 800 | D | 78 | 269 | 36,9 | 1"3/8 | X | - | 468 |
| SN 08D P04 A1 | 134,8 | 46 | 4 | ⁝⁝ | 2712 | 56 893 | 3230 | 800 | D | 78 | 269 | 36,9 | 2x7/8" | X | - | 468 |
| SU 12Y L04 D2 | 135,3 | 32 | 4 | •••• | 8438 | 31 462 | 718 | 800 | A | 64 | 673 | 92,3 | 1"5/8 | - | X | 711 |
| SU 12Y P04 D2 | 135,3 | 32 | 4 | ⁝⁝ | 4312 | 31 462 | 718 | 800 | A | 64 | 673 | 92,3 | 2x1"3/8 | X | - | 646 |
| SU 12Y P06 A1 | 135,9 | 34 | 6 | ⁝⁝⁝ | 3912 | 43 039 | 1101 | 800 | A | 66 | 404 | 55,4 | 2x1"1/8 | X | - | 673 |
| SN 08Y L04 A2 | 138,7 | 41 | 4 | •••• | 5112 | 38 951 | 2174 | 800 | C | 73 | 404 | 55,4 | 1"5/8 | X | - | 508 |
| SN 08Y P04 A2 | 138,7 | 41 | 4 | ⁝⁝ | 2712 | 38 951 | 2174 | 800 | C | 73 | 404 | 55,4 | 2x1"1/8 | X | - | 510 |
| SE 12D L04 B2 | 139,6 | 38 | 4 | •••• | 6342 | 35 752 | 1286 | 800 | B | 70 | 505 | 69,2 | 1"5/8 | X | - | 579 |
| SE 12D P04 B2 | 139,6 | 38 | 4 | ⁝⁝ | 3342 | 35 752 | 1286 | 800 | B | 70 | 505 | 69,2 | 2x1"1/8 | X | - | 564 |
| SN 08Y L03 D2 | 140,7 | 40 | 3 | ••• | 6312 | 36 002 | 1561 | 800 | B | 72 | 505 | 69,2 | 1"5/8 | X | - | 540 |
| SE 16D L06 A1 | 140,9 | 36 | 6 | •••••• | 7512 | 45 595 | 1257 | 800 | A | 68 | 404 | 55,4 | 1"3/8 | X | - | 690 |
| SE 16D P06 A1 | 140,9 | 36 | 6 | ⁝⁝⁝ | 3912 | 45 595 | 1257 | 800 | A | 68 | 404 | 55,4 | 2x1"1/8 | X | - | 673 |
| SU 16Y P06 D1 | 141,9 | 27 | 6 | ⁝⁝⁝ | 6312 | 36 413 | 593 | 800 | A | 59 | 673 | 92,3 | 2x1"3/8 | X | - | 829 |
| SE 16D L04 D2 | 142,1 | 34 | 4 | •••• | 8438 | 33 167 | 818 | 800 | A | 66 | 673 | 92,3 | 1"5/8 | - | X | 711 |
| SE 16D P04 D2 | 142,1 | 34 | 4 | ⁝⁝ | 4312 | 33 167 | 818 | 800 | A | 66 | 673 | 92,3 | 2x1"3/8 | X | - | 646 |
| SN 08D L03 B2 | 143,2 | 45 | 3 | ••• | 4842 | 42 322 | 2432 | 800 | C | 77 | 378 | 51,9 | 1"3/8 | X | - | 450 |
| SU 16Y P08 A1 | 143,3 | 28 | 8 | ⁝⁝⁝⁝ | 5112 | 40 414 | 809 | 800 | A | 60 | 538 | 73,8 | 2x1"3/8 | X | - | 869 |
| SU 12Y L05 B2 | 146,5 | 33 | 5 | ••••• | 7998 | 35 457 | 920 | 800 | A | 65 | 631 | 86,5 | 1"5/8 | - | X | 725 |
| SN 08Y L05 A1 | 146,7 | 42 | 5 | ••••• | 6312 | 55 035 | 2651 | 800 | C | 74 | 336 | 46,1 | 1"3/8 | X | - | 579 |
| SE 12D L05 B1 | 147,7 | 39 | 5 | ••••• | 7998 | 48 249 | 1559 | 800 | B | 71 | 420 | 57,7 | 1"3/8 | - | X | 661 |
| SE 12D L05 A2 | 152,5 | 39 | 5 | ••••• | 6312 | 40 619 | 1642 | 800 | B | 71 | 505 | 69,2 | 1"5/8 | X | - | 631 |
| SU 12Y L06 A2 | 152,6 | 34 | 6 | •••••• | 7512 | 37 864 | 1122 | 800 | A | 66 | 605 | 83,1 | 2"1/8 | X | - | 751 |
| SE 16D L05 B2 | 154,1 | 35 | 5 | ••••• | 7998 | 37 585 | 1050 | 800 | A | 67 | 631 | 86,5 | 1"5/8 | - | X | 725 |
| SN 08D L04 B1 | 154,1 | 46 | 4 | •••• | 6342 | 60 259 | 3140 | 800 | C | 78 | 336 | 46,1 | 1"3/8 | X | - | 528 |
| SN 08D P04 B1 | 154,1 | 46 | 4 | ⁝⁝ | 3342 | 60 259 | 3140 | 800 | C | 78 | 336 | 46,1 | 2x1"1/8 | X | - | 513 |
| SU 12Y P06 B1 | 154,2 | 34 | 6 | ⁝⁝⁝ | 4842 | 46 656 | 1081 | 800 | A | 66 | 505 | 69,2 | 2x1"1/8 | X | - | 738 |

# NEOSTAR SILENCE - Axial fan condenser

**R404A** **DT1 = 15K**

| NEOSTAR SILENCE | Capacity (1) DT1 = 15K kW | Ventilation: Acoustic Lp (2) dB(A) | Ventilation: Total number of fans | Ventilation: Fan arrangement | Total length mm | Ventilation: Air flow m³/h | Ventilation: True input power (3) W total | Ventilation: Fans Ø mm | Ventilation: Energy efficiency class | Ventilation: Acoustic Lw dB(A) | Coil: Surface m² | Coil: Circuit volume dm³ | Connections: Inlet / Outlet* Ø mm | Connections: Same side | Connections: Opposite sides | Net weight kg |
|---|---|---|---|---|---|---|---|---|---|---|---|---|---|---|---|---|
| SU 16Y P06 D2 | 154,8 | 27 | 6 | ::: | 6312 | 33 803 | 597 | 800 | A | 59 | 1009 | 138,4 | 2x1"5/8 | X | - | 934 |
| SE 12D L06 A1 | 156,7 | 40 | 6 | •••••• | 7512 | 54 136 | 1922 | 800 | B | 72 | 404 | 55,4 | 1"3/8 | X | - | 690 |
| SE 12D P06 A1 | 156,7 | 40 | 6 | ::: | 3912 | 54 136 | 1922 | 800 | B | 72 | 404 | 55,4 | 2x1"1/8 | X | - | 673 |
| SE 16D L06 A2 | 160,1 | 36 | 6 | •••••• | 7512 | 40 437 | 1285 | 800 | A | 68 | 605 | 83,1 | 2"1/8 | X | - | 751 |
| SE 12D L04 D2 | 160,3 | 38 | 4 | •••• | 8438 | 38 975 | 1242 | 800 | A | 70 | 673 | 92,3 | 1"5/8 | - | X | 711 |
| SE 12D P04 D2 | 160,3 | 38 | 4 | :: | 4312 | 38 975 | 1242 | 800 | A | 70 | 673 | 92,3 | 2x1"3/8 | X | - | 646 |
| SE 16D P06 B1 | 160,5 | 36 | 6 | ::: | 4842 | 49 217 | 1231 | 800 | A | 68 | 505 | 69,2 | 2x1"1/8 | X | - | 738 |
| SN 08Y L04 B2 | 160,8 | 41 | 4 | •••• | 6342 | 43 552 | 2126 | 800 | B | 73 | 505 | 69,2 | 1"5/8 | X | - | 579 |
| SN 08Y P04 B2 | 160,8 | 41 | 4 | :: | 3342 | 43 552 | 2126 | 800 | B | 73 | 505 | 69,2 | 2x1"1/8 | X | - | 564 |
| SU 16Y P08 B1 | 164,2 | 28 | 8 | :::: | 6342 | 44 464 | 798 | 800 | A | 60 | 673 | 92,3 | 2x1"3/8 | X | - | 955 |
| SN 08D L04 A2 | 166,9 | 46 | 4 | •••• | 5112 | 51 876 | 3371 | 800 | C | 78 | 404 | 55,4 | 1"5/8 | X | - | 508 |
| SN 08D P04 A2 | 166,9 | 46 | 4 | :: | 2712 | 51 876 | 3371 | 800 | C | 78 | 404 | 55,4 | 2x1"1/8 | X | - | 510 |
| SN 08Y L05 A2 | 173,4 | 42 | 5 | ••••• | 6312 | 48 689 | 2717 | 800 | C | 74 | 505 | 69,2 | 1"5/8 | X | - | 631 |
| SE 12D L05 B2 | 174,5 | 39 | 5 | ••••• | 7998 | 44 690 | 1607 | 800 | B | 71 | 631 | 86,5 | 1"5/8 | - | X | 725 |
| SN 08Y L06 A1 | 176,0 | 43 | 6 | :::::: | 7512 | 66 042 | 3181 | 800 | C | 75 | 404 | 55,4 | 1"5/8 | X | - | 690 |
| SN 08Y P06 A1 | 176,0 | 43 | 6 | ::: | 3912 | 66 042 | 3181 | 800 | C | 75 | 404 | 55,4 | 2x1"1/8 | X | - | 673 |
| SE 12D P06 B1 | 177,3 | 40 | 6 | ::: | 4842 | 57 899 | 1871 | 800 | B | 72 | 505 | 69,2 | 2x1"1/8 | X | - | 738 |
| SU 12Y P06 D1 | 178,5 | 34 | 6 | ::: | 6312 | 50 261 | 1055 | 800 | A | 66 | 673 | 92,3 | 2x1"3/8 | X | - | 829 |
| SU 16Y P10 A1 | 179,1 | 29 | 10 | ::::: | 6312 | 50 517 | 1011 | 800 | A | 61 | 673 | 92,3 | 2x1"3/8 | X | - | 1075 |
| SU 12Y P08 A1 | 181,2 | 35 | 8 | :::: | 5112 | 57 385 | 1468 | 800 | A | 67 | 538 | 73,8 | 2x1"3/8 | X | - | 869 |
| SN 08D L04 A3 | 182,4 | 46 | 4 | •••• | 5112 | 47 284 | 3503 | 800 | C | 78 | 538 | 73,8 | 1"5/8 | X | - | 550 |
| SN 08D P04 A3 | 182,4 | 46 | 4 | :: | 2712 | 47 284 | 3503 | 800 | C | 78 | 538 | 73,8 | 2x1"1/8 | X | - | 553 |
| SE 12D L06 A2 | 183,0 | 40 | 6 | •••••• | 7512 | 48 743 | 1970 | 800 | B | 72 | 605 | 83,1 | 2"1/8 | X | - | 751 |
| SE 12D P06 A2 | 183,0 | 40 | 6 | ::: | 3912 | 48 743 | 1970 | 800 | B | 72 | 605 | 83,1 | 2x1"3/8 | X | - | 735 |
| SE 16D P06 D1 | 184,5 | 36 | 6 | ::: | 6312 | 52 768 | 1206 | 800 | A | 68 | 673 | 92,3 | 2x1"3/8 | X | - | 829 |
| SN 08Y L04 D2 | 187,6 | 41 | 4 | •••• | 8438 | 48 003 | 2082 | 800 | B | 73 | 673 | 92,3 | 1"5/8 | - | X | 711 |
| SN 08Y P04 D2 | 187,6 | 41 | 4 | :: | 4312 | 48 003 | 2082 | 800 | B | 73 | 673 | 92,3 | 2x1"3/8 | X | - | 646 |
| SE 16D P08 A1 | 187,8 | 37 | 8 | :::: | 5112 | 60 793 | 1675 | 800 | A | 69 | 538 | 73,8 | 2x1"3/8 | X | - | 869 |
| SU 16Y P08 D1 | 189,2 | 28 | 8 | :::: | 8438 | 48 550 | 791 | 800 | A | 60 | 897 | 123,0 | 2x1"3/8 | - | X | 1088 |
| SN 08D L04 B2 | 190,9 | 46 | 4 | •••• | 6342 | 56 430 | 3243 | 800 | C | 78 | 505 | 69,2 | 1"5/8 | X | - | 579 |
| SN 08D P04 B2 | 190,9 | 46 | 4 | :: | 3342 | 56 430 | 3243 | 800 | C | 78 | 505 | 69,2 | 2x1"1/8 | X | - | 564 |
| SN 08Y L05 B2 | 200,9 | 42 | 5 | ••••• | 7998 | 54 439 | 2657 | 800 | B | 74 | 631 | 86,5 | 1"5/8 | - | X | 725 |
| SN 08Y P06 B1 | 201,2 | 43 | 6 | ::: | 4842 | 71 243 | 3130 | 800 | C | 75 | 505 | 69,2 | 2x1"1/8 | X | - | 738 |
| SN 08D P06 A1 | 202,2 | 48 | 6 | ::: | 3912 | 85 339 | 4845 | 800 | D | 80 | 404 | 55,4 | 2x1"1/8 | X | - | 673 |
| SU 12Y P06 D2 | 203,0 | 34 | 6 | ::: | 6312 | 47 193 | 1077 | 800 | A | 66 | 1009 | 138,4 | 2x1"5/8 | X | - | 934 |
| SU 16Y P10 B1 | 205,3 | 29 | 10 | ::::: | 7998 | 55 581 | 997 | 800 | A | 61 | 841 | 115,4 | 2x1"3/8 | - | X | 1188 |
| SU 12Y P08 B1 | 205,6 | 35 | 8 | :::: | 6342 | 62 208 | 1441 | 800 | A | 67 | 673 | 92,3 | 2x1"3/8 | X | - | 955 |
| SN 08Y L06 A2 | 208,0 | 43 | 6 | •••••• | 7512 | 58 427 | 3261 | 800 | C | 75 | 605 | 83,1 | 2"1/8 | X | - | 751 |
| SN 08Y P06 A2 | 208,0 | 43 | 6 | ::: | 3912 | 58 427 | 3261 | 800 | C | 75 | 605 | 83,1 | 2x1"3/8 | X | - | 735 |
| SN 08D L05 A2 | 208,6 | 47 | 5 | ••••• | 6312 | 64 846 | 4214 | 800 | C | 79 | 505 | 69,2 | 1"5/8 | X | - | 631 |
| SE 12D P08 A1 | 208,9 | 41 | 8 | :::: | 5112 | 72 182 | 2562 | 800 | B | 73 | 538 | 73,8 | 2x1"3/8 | X | - | 869 |
| SE 12D P06 B2 | 209,4 | 40 | 6 | ::: | 4842 | 53 628 | 1929 | 800 | B | 72 | 757 | 103,8 | 2x1"3/8 | X | - | 815 |
| SN 08D P04 B3 | 210,7 | 46 | 4 | :: | 3342 | 52 923 | 3342 | 800 | C | 78 | 673 | 92,3 | 2x1"1/8 | X | - | 618 |
| SU 12Y P06 D3 | 211,8 | 34 | 6 | ::: | 6312 | 44 497 | 1093 | 800 | A | 66 | 1345 | 184,6 | 2x1"1/8 | X | - | 1042 |
| SE 16D P06 D2 | 213,2 | 36 | 6 | ::: | 6312 | 49 751 | 1227 | 800 | A | 68 | 1009 | 138,4 | 2x1"5/8 | X | - | 934 |
| SN 08Y L05 B3 | 213,9 | 42 | 5 | ••••• | 7842 | 49 983 | 2704 | 800 | B | 74 | 841 | 115,4 | 2"1/8 | X | - | 793 |
| SE 16D P08 B1 | 214,0 | 37 | 8 | :::: | 6342 | 65 623 | 1641 | 800 | A | 69 | 673 | 92,3 | 2x1"3/8 | X | - | 955 |
| SU 16Y P12 A1 | 214,9 | 30 | 12 | :::::: | 7512 | 60 620 | 1214 | 800 | A | 62 | 807 | 110,7 | 2x1"3/8 | X | - | 1281 |
| SN 08D L04 D2 | 220,7 | 46 | 4 | •••• | 8438 | 60 754 | 3127 | 800 | B | 78 | 673 | 92,3 | 1"5/8 | - | X | 711 |
| SN 08D P04 D2 | 220,7 | 46 | 4 | :: | 4312 | 60 754 | 3127 | 800 | B | 78 | 673 | 92,3 | 2x1"3/8 | X | - | 646 |
| SE 12D P06 B3 | 222,1 | 40 | 6 | ::: | 4842 | 49 846 | 1961 | 800 | A | 72 | 1009 | 138,4 | 2x1"5/8 | X | - | 894 |
| SU 16Y P10 B2 | 222,7 | 29 | 10 | ::::: | 7998 | 49 842 | 1012 | 800 | A | 61 | 1261 | 173,0 | 2x1"5/8 | - | X | 1317 |

**SN 08D :** *660 rpm - 990 W max. - 2,37 A max. (4)*
**SE 12D :** *435 rpm - 360 W max. - 1,12 A max. (4)*
**SE 16D :** *360 rpm - 235 W max. - 0,65 A max. (4)*
**SN 08Y :** *485 rpm - 580 W max. - 1,21 A max. (4)*
**SU 12Y :** *340 rpm - 200 W max. - 0,47 A max. (4)*
**SU 16Y :** *255 rpm - 105 W max. - 0,25 A max. (4)*

*(1) Capacities are expressed in kW for R404A with DT1 = 15 K. They are equal to the capacities measured in accordance with standard CEN EN 327.*
*"DT1" represents the difference between the ambient air temperature and the condensation temperature considered equal at an equivalent condenser inlet pressure.*

*(2) Sound pressure level in dB(A) measured at 10 m, line of sight, on a reflective parallelepiped measurement surface, given for information only. Values measured under nominal operating conditions with clean coils and rated voltage.*
*(3) Power required for all motors.*
*(4) Setting of overload protection levels.*

| M60 | M25 | M26 | MTH | IRP | C2V | SCU | MCI | BAE | BXT | REH | RE .. | ECB | MEC | CMP | RP1 | RP2 | RP3 | MSK |
|---|---|---|---|---|---|---|---|---|---|---|---|---|---|---|---|---|---|---|
| +👤 | +👤 | +👤 | O | O | O | O | O | O | +👤 | O | O | O | O | O | O | O | O | O |

| NEOSTAR SILENCE | Capacity (1) DT1 = 15K | Ventilation | | | Total length | Ventilation | | | | | Coil | | Connections | | | Net weight |
|---|---|---|---|---|---|---|---|---|---|---|---|---|---|---|---|---|
| | kW | Acoustic Lp (2) dB(A) | Total number of fans | Fan arrangement | mm | Air flow $m^3/h$ | True input power (3) W total | Fans Ø mm | Energy efficiency class | Acoustic Lw dB(A) | Surface $m^2$ | Circuit volume $dm^3$ | Inlet / Outlet* Ø mm | Same side | Opposite sides | kg |
| SU 12Y P10 A1 | 226,5 | 36 | 10 | ::::: | 6312 | 71 732 | 1835 | 800 | A | 68 | 673 | 92,3 | 2x1"3/8 | X | - | 1075 |
| SU 16Y P12 A2 | 230,9 | 30 | 12 | :::::: | 7512 | 52 470 | 1222 | 800 | A | 62 | 1211 | 166,1 | 2x2"1/8 | X | - | 1403 |
| SN 08D P06 B1 | 231,1 | 48 | 6 | ::: | 4842 | 90 389 | 4709 | 800 | C | 80 | 505 | 69,2 | 2x1"1/8 | X | - | 738 |
| SU 12Y P08 B2 | 234,4 | 35 | 8 | :::: | 6342 | 56 730 | 1472 | 800 | A | 67 | 1009 | 138,4 | 2x1"5/8 | X | - | 1057 |
| SN 08Y P08 A1 | 234,7 | 44 | 8 | :::: | 5112 | 88 056 | 4242 | 800 | C | 76 | 538 | 73,8 | 2x1"3/8 | X | - | 869 |
| SE 16D P10 A1 | 234,8 | 38 | 10 | ::::: | 6312 | 75 991 | 2094 | 800 | A | 70 | 673 | 92,3 | 2x1"3/8 | X | - | 1075 |
| SE 12D P08 B1 | 236,3 | 41 | 8 | :::: | 6342 | 77 199 | 2495 | 800 | B | 73 | 673 | 92,3 | 2x1"3/8 | X | - | 955 |
| SN 08D L05 B2 | 238,6 | 47 | 5 | ••••• | 7998 | 70 537 | 4053 | 800 | C | 79 | 631 | 86,5 | 1"5/8 | - | X | 725 |
| SE 12D P06 D2 | 240,4 | 40 | 6 | ::: | 6312 | 58 462 | 1863 | 800 | A | 72 | 1009 | 138,4 | 2x1"5/8 | X | - | 934 |
| SN 08Y P06 B2 | 241,1 | 43 | 6 | ::: | 4842 | 65 327 | 3189 | 800 | B | 75 | 757 | 103,8 | 2x1"3/8 | X | - | 815 |
| SE 12D P08 A2 | 244,0 | 41 | 8 | :::: | 5112 | 64 991 | 2627 | 800 | B | 73 | 807 | 110,7 | 2x1"1/8 | X | - | 950 |
| SU 16Y P12 B1 | 246,3 | 30 | 12 | :::::: | 9342 | 66 697 | 1197 | 800 | A | 62 | 1009 | 138,4 | 2x1"5/8 | X | - | 1418 |
| SE 16D P08 B2 | 246,5 | 37 | 8 | :::: | 6342 | 60 136 | 1680 | 800 | A | 69 | 1009 | 138,4 | 2x1"5/8 | X | - | 1057 |
| SN 08D L06 A2 | 250,3 | 48 | 6 | •••••• | 7512 | 77 815 | 5056 | 800 | C | 80 | 605 | 83,1 | 2"1/8 | X | - | 751 |
| SN 08D P06 A2 | 250,3 | 48 | 6 | ::: | 3912 | 77 815 | 5056 | 800 | C | 80 | 605 | 83,1 | 2x1"3/8 | X | - | 735 |
| SU 16Y P14 A1 | 250,7 | 30 | 14 | ::::::: | 8712 | 70 724 | 1416 | 800 | A | 62 | 942 | 129,2 | 2x1"5/8 | X | - | 1466 |
| SU 12Y P10 B1 | 257,1 | 36 | 10 | ::::: | 7998 | 77 760 | 1801 | 800 | A | 68 | 841 | 115,4 | 2x1"3/8 | - | X | 1188 |
| SE 12D P10 A1 | 261,1 | 42 | 10 | ::::: | 6312 | 90 227 | 3203 | 800 | B | 74 | 673 | 92,3 | 2x1"3/8 | X | - | 1075 |
| SN 08D L05 B3 | 263,3 | 47 | 5 | ••••• | 7842 | 66 154 | 4177 | 800 | C | 79 | 841 | 115,4 | 2"1/8 | X | - | 793 |
| SU 16Y P12 B2 | 267,2 | 30 | 12 | :::::: | 9498 | 59 811 | 1215 | 800 | A | 62 | 1514 | 207,6 | 2x2"1/8 | - | X | 1571 |
| SE 16D P10 B1 | 267,5 | 38 | 10 | ::::: | 7998 | 82 028 | 2051 | 800 | A | 70 | 841 | 115,4 | 2x1"3/8 | - | X | 1188 |
| SN 08Y P08 B1 | 268,3 | 44 | 8 | :::: | 6342 | 94 990 | 4174 | 800 | C | 76 | 673 | 92,3 | 2x1"3/8 | X | - | 955 |
| SN 08D P08 A1 | 269,6 | 49 | 8 | :::: | 5112 | 113 785 | 6459 | 800 | D | 81 | 538 | 73,8 | 2x1"3/8 | X | - | 869 |
| SU 12Y P12 A1 | 271,8 | 37 | 12 | :::::: | 7512 | 86 078 | 2202 | 800 | A | 69 | 807 | 110,7 | 2x1"3/8 | X | - | 1281 |
| SN 08D L06 A3 | 273,6 | 48 | 6 | •••••• | 7512 | 70 926 | 5255 | 800 | C | 80 | 807 | 110,7 | 2"1/8 | X | - | 816 |
| SN 08D P06 A3 | 273,6 | 48 | 6 | ::: | 3912 | 70 926 | 5255 | 800 | C | 80 | 807 | 110,7 | 2x1"3/8 | X | - | 799 |
| SN 08Y P08 A2 | 277,4 | 44 | 8 | :::: | 5112 | 77 902 | 4348 | 800 | C | 76 | 807 | 110,7 | 2x1"5/8 | X | - | 950 |
| SE 12D P08 B2 | 279,2 | 41 | 8 | :::: | 6342 | 71 504 | 2571 | 800 | B | 73 | 1009 | 138,4 | 2x1"5/8 | X | - | 1057 |
| SN 08Y P06 D2 | 281,4 | 43 | 6 | ::: | 6312 | 72 004 | 3123 | 800 | B | 75 | 1009 | 138,4 | 2x1"5/8 | X | - | 934 |
| SE 16D P12 A1 | 281,8 | 39 | 12 | :::::: | 7512 | 91 189 | 2513 | 800 | A | 71 | 807 | 110,7 | 2x1"3/8 | X | - | 1281 |
| SE 16D P08 D2 | 284,3 | 37 | 8 | :::: | 8438 | 66 335 | 1636 | 800 | A | 69 | 1345 | 184,6 | 2x1"5/8 | - | X | 1228 |
| SU 16Y P16 A1 | 286,5 | 31 | 16 | :::::::: | 9912 | 80 827 | 1618 | 800 | A | 63 | 1076 | 147,7 | 2x2"1/8 | X | - | 1646 |
| SU 16Y P14 B1 | 287,4 | 30 | 14 | ::::::: | 10842 | 77 813 | 1396 | 800 | A | 62 | 1177 | 161,5 | 2x2"1/8 | X | - | 1654 |
| SU 12Y P10 B2 | 293,0 | 36 | 10 | ::::: | 7998 | 70 913 | 1840 | 800 | A | 68 | 1261 | 173,0 | 2x1"5/8 | - | X | 1317 |
| SN 08Y P10 A1 | 293,3 | 45 | 10 | ::::: | 6312 | 110 070 | 5302 | 800 | C | 77 | 673 | 92,3 | 2x1"3/8 | X | - | 1075 |
| SE 12D P10 B1 | 295,4 | 42 | 10 | ::::: | 7998 | 96 498 | 3119 | 800 | B | 74 | 841 | 115,4 | 2x1"3/8 | - | X | 1188 |
| SN 08Y P06 D3 | 302,3 | 43 | 6 | ::: | 6312 | 68 152 | 3161 | 800 | B | 75 | 1345 | 184,6 | 2x1"5/8 | X | - | 1042 |
| SE 12D P10 A2 | 305,0 | 42 | 10 | ::::: | 6312 | 81 238 | 3284 | 800 | B | 74 | 1009 | 138,4 | 2x1"5/8 | X | - | 1178 |
| SN 08D P08 B1 | 308,1 | 49 | 8 | :::: | 6342 | 120 519 | 6279 | 800 | C | 81 | 673 | 92,3 | 2x1"3/8 | X | - | 955 |
| SE 16D P10 B2 | 308,2 | 38 | 10 | ::::: | 7998 | 75 170 | 2100 | 800 | A | 70 | 1261 | 173,0 | 2x1"5/8 | - | X | 1317 |
| SU 12Y P12 B1 | 308,5 | 37 | 12 | :::::: | 9342 | 93 312 | 2161 | 800 | A | 69 | 1009 | 138,4 | 2x1"5/8 | X | - | 1418 |
| SU 16Y P14 B2 | 311,8 | 30 | 14 | ::::::: | 10998 | 69 779 | 1417 | 800 | A | 62 | 1766 | 242,3 | 2x2"1/8 | - | X | 1833 |
| SN 08D P06 B3 | 316,0 | 48 | 6 | ::: | 4842 | 79 385 | 5013 | 800 | C | 80 | 1009 | 138,4 | 2x1"5/8 | X | - | 894 |
| SU 12Y P14 A1 | 317,1 | 37 | 14 | ::::::: | 8712 | 100 424 | 2569 | 800 | A | 69 | 942 | 129,2 | 2x1"5/8 | X | - | 1466 |
| SE 12D P08 D2 | 320,5 | 41 | 8 | :::: | 8438 | 77 950 | 2484 | 800 | A | 73 | 1345 | 184,6 | 2x1"5/8 | - | X | 1228 |
| SE 16D P12 B1 | 321,0 | 39 | 12 | :::::: | 9342 | 98 434 | 2462 | 800 | A | 71 | 1009 | 138,4 | 2x1"5/8 | X | - | 1418 |
| SN 08Y P08 B2 | 321,5 | 44 | 8 | :::: | 6342 | 87 103 | 4252 | 800 | B | 76 | 1009 | 138,4 | 2x1"5/8 | X | - | 1057 |
| SU 16Y P16 B1 | 328,4 | 31 | 16 | :::::::: | 12342 | 88 929 | 1596 | 800 | A | 63 | 1346 | 184,6 | 2x2"1/8 | X | - | 1874 |
| SE 16D P14 A1 | 328,7 | 39 | 14 | ::::::: | 8712 | 106 387 | 2932 | 800 | A | 71 | 942 | 129,2 | 2x1"5/8 | X | - | 1466 |
| SN 08D P08 A2 | 333,7 | 49 | 8 | :::: | 5112 | 103 753 | 6742 | 800 | C | 81 | 807 | 110,7 | 2x1"5/8 | X | - | 950 |
| SN 08Y P10 B1 | 335,4 | 45 | 10 | ::::: | 7998 | 118 738 | 5217 | 800 | C | 77 | 841 | 115,4 | 2x1"3/8 | - | X | 1188 |
| SN 08Y P10 A2 | 346,7 | 45 | 10 | ::::: | 6312 | 97 378 | 5435 | 800 | C | 77 | 1009 | 138,4 | 2x1"5/8 | X | - | 1178 |
| SE 12D P10 B2 | 349,0 | 42 | 10 | ::::: | 7998 | 89 380 | 3214 | 800 | B | 74 | 1261 | 173,0 | 2x1"5/8 | - | X | 1317 |
| SN 08Y P12 A1 | 352,0 | 46 | 12 | :::::: | 7512 | 132 084 | 6363 | 800 | C | 78 | 807 | 110,7 | 2x1"5/8 | X | - | 1281 |
| SE 12D P12 B1 | 354,5 | 43 | 12 | :::::: | 9342 | 115 798 | 3742 | 800 | B | 75 | 1009 | 138,4 | 2x1"5/8 | X | - | 1418 |
| SE 16D P10 D2 | 355,4 | 38 | 10 | ::::: | 10438 | 82 918 | 2045 | 800 | A | 70 | 1682 | 230,7 | 2x2"1/8 | - | X | 1524 |
| SU 16Y P16 B2 | 356,3 | 31 | 16 | :::::::: | 12342 | 79 748 | 1619 | 800 | A | 63 | 2018 | 276,9 | 2x2"1/8 | X | - | 2078 |
| SU 12Y P14 B1 | 359,9 | 37 | 14 | ::::::: | 10842 | 108 865 | 2521 | 800 | A | 69 | 1177 | 161,5 | 2x2"1/8 | X | - | 1654 |
| SN 08D P08 A3 | 364,8 | 49 | 8 | :::: | 5112 | 94 568 | 7006 | 800 | C | 81 | 1076 | 147,7 | 2x1"5/8 | X | - | 1035 |
| SE 12D P12 A2 | 366,0 | 43 | 12 | :::::: | 7512 | 97 486 | 3941 | 800 | B | 75 | 1211 | 166,1 | 2x2"1/8 | X | - | 1403 |

# NEOSTAR SILENCE - Axial fan condenser

**R404A** **DT1 = 15K**

| NEOSTAR SILENCE | Capacity (1) DT1 = 15K kW | Ventilation: Acoustic Lp (2) dB(A) | Ventilation: Total number of fans | Ventilation: Fan arrangement | Total length mm | Ventilation: Air flow m³/h | Ventilation: True input power (3) W total | Ventilation: Fans Ø mm | Ventilation: Energy efficiency class | Ventilation: Acoustic Lw dB(A) | Coil: Surface m² | Coil: Circuit volume dm³ | Connections: Inlet / Outlet* Ø mm | Connections: Same side | Connections: Opposite sides | Net weight kg |
|---|---|---|---|---|---|---|---|---|---|---|---|---|---|---|---|---|
| **SE 16D P12 B2** | **369,8** | 39 | 12 | | 9498 | 90 204 | 2520 | 800 | A | 71 | 1514 | 207,6 | 2x2"1/8 | - | X | 1571 |
| **SE 16D P14 B1** | **374,5** | 39 | 14 | | 10842 | 114 840 | 2872 | 800 | A | 71 | 1177 | 161,5 | 2x2"1/8 | X | - | 1654 |
| **SN 08Y P08 D2** | **375,2** | 44 | 8 | | 8438 | 96 005 | 4164 | 800 | B | 76 | 1345 | 184,6 | 2x1"5/8 | - | X | 1228 |
| **SE 16D P16 A1** | **375,7** | 40 | 16 | | 9912 | 121 586 | 3351 | 800 | A | 72 | 1076 | 147,7 | 2x2"1/8 | X | - | 1646 |
| **SN 08D P08 B2** | **381,8** | 49 | 8 | | 6342 | 112 859 | 6486 | 800 | C | 81 | 1009 | 138,4 | 2x1"5/8 | X | - | 1057 |
| **SE 12D P10 D2** | **400,6** | 42 | 10 | | 10438 | 97 437 | 3105 | 800 | A | 74 | 1682 | 230,7 | 2x2"1/8 | - | X | 1524 |
| **SN 08Y P10 B2** | **401,9** | 45 | 10 | | 7998 | 108 879 | 5315 | 800 | B | 77 | 1261 | 173,0 | 2x1"5/8 | - | X | 1317 |
| **SU 12Y P16 B1** | **411,3** | 38 | 16 | | 12342 | 124 417 | 2881 | 800 | A | 70 | 1346 | 184,6 | 2x2"1/8 | X | - | 1874 |
| **SE 12D P14 B1** | **413,6** | 43 | 14 | | 10842 | 135 098 | 4366 | 800 | B | 75 | 1177 | 161,5 | 2x2"1/8 | X | - | 1654 |
| **SN 08Y P12 A2** | **416,0** | 46 | 12 | | 7512 | 116 853 | 6521 | 800 | C | 78 | 1211 | 166,1 | 2x2"1/8 | X | - | 1403 |
| **SN 08D P10 A2** | **417,2** | 50 | 10 | | 6312 | 129 691 | 8427 | 800 | C | 82 | 1009 | 138,4 | 2x1"5/8 | X | - | 1178 |
| **SE 12D P12 B2** | **418,8** | 43 | 12 | | 9498 | 107 256 | 3857 | 800 | B | 75 | 1514 | 207,6 | 2x2"1/8 | - | X | 1571 |
| **SE 12D P14 A2** | **427,0** | 43 | 14 | | 8838 | 113 733 | 4598 | 800 | B | 75 | 1413 | 193,8 | 2x2"1/8 | - | X | 1603 |
| **SE 16D P16 B1** | **428,0** | 40 | 16 | | 12342 | 131 246 | 3282 | 800 | A | 72 | 1346 | 184,6 | 2x2"1/8 | X | - | 1874 |
| **SE 16D P14 B2** | **431,4** | 39 | 14 | | 10998 | 105 238 | 2940 | 800 | A | 71 | 1766 | 242,3 | 2x2"1/8 | - | X | 1833 |
| **SN 08Y P12 A3** | **435,3** | 46 | 12 | | 7512 | 104 151 | 6654 | 800 | C | 78 | 1615 | 221,5 | 2x2"1/8 | X | - | 1534 |
| **SN 08D P08 D2** | **441,4** | 49 | 8 | | 8438 | 121 507 | 6254 | 800 | B | 81 | 1345 | 184,6 | 2x1"5/8 | - | X | 1228 |
| **SE 12D P12 B3** | **444,2** | 43 | 12 | | 9498 | 99 692 | 3923 | 800 | A | 75 | 2018 | 276,9 | 2x2"1/8 | - | X | 1732 |
| **SN 08D P10 A3** | **456,0** | 50 | 10 | | 6312 | 118 210 | 8758 | 800 | C | 82 | 1345 | 184,6 | 2x1"5/8 | X | - | 1289 |
| **SU 12Y P16 B2** | **468,7** | 38 | 16 | | 12342 | 113 461 | 2944 | 800 | A | 70 | 2018 | 276,9 | 2x2"1/8 | X | - | 2078 |
| **SE 12D P16 B1** | **472,7** | 44 | 16 | | 12342 | 154 398 | 4990 | 800 | B | 76 | 1346 | 184,6 | 2x2"1/8 | X | - | 1874 |
| **SN 08D P10 B2** | **477,3** | 50 | 10 | | 7998 | 141 074 | 8107 | 800 | C | 82 | 1261 | 173,0 | 2x1"5/8 | - | X | 1317 |
| **SN 08Y P12 B2** | **482,3** | 46 | 12 | | 9498 | 130 655 | 6378 | 800 | B | 78 | 1514 | 207,6 | 2x2"1/8 | - | X | 1571 |
| **SE 12D P16 A2** | **488,1** | 44 | 16 | | 10038 | 129 981 | 5255 | 800 | B | 76 | 1615 | 221,5 | 2x2"1/8 | - | X | 1789 |
| **SE 12D P14 B2** | **488,6** | 43 | 14 | | 10998 | 125 132 | 4500 | 800 | B | 75 | 1766 | 242,3 | 2x2"1/8 | - | X | 1833 |
| **SE 16D P16 B2** | **493,0** | 40 | 16 | | 12342 | 120 272 | 3360 | 800 | A | 72 | 2018 | 276,9 | 2x2"1/8 | X | - | 2078 |
| **SN 08D P12 A2** | **500,6** | 51 | 12 | | 7512 | 155 629 | 10113 | 800 | C | 83 | 1211 | 166,1 | 2x2"1/8 | X | - | 1403 |
| **SE 16D P16 B3** | **509,1** | 40 | 16 | | 12498 | 110 591 | 3413 | 800 | A | 72 | 2691 | 369,2 | 2x2"5/8 | - | X | 2280 |
| **SE 12D P16 A3** | **512,8** | 44 | 16 | | 10038 | 117 562 | 5382 | 800 | B | 76 | 2153 | 295,3 | 2x2"1/8 | - | X | 1931 |
| **SN 08Y P12 B3** | **513,3** | 46 | 12 | | 9498 | 119 959 | 6490 | 800 | B | 78 | 2018 | 276,9 | 2x2"1/8 | - | X | 1732 |
| **SN 08D P10 B3** | **526,7** | 50 | 10 | | 7842 | 132 308 | 8354 | 800 | C | 82 | 1682 | 230,7 | 2x2"1/8 | X | - | 1454 |
| **SN 08Y P16 B1** | **536,6** | 47 | 16 | | 12342 | 189 980 | 8347 | 800 | C | 79 | 1346 | 184,6 | 2x2"1/8 | X | - | 1874 |
| **SN 08D P12 A3** | **547,2** | 51 | 12 | | 7512 | 141 853 | 10509 | 800 | C | 83 | 1615 | 221,5 | 2x2"1/8 | X | - | 1534 |
| **SE 12D P16 B2** | **558,4** | 44 | 16 | | 12342 | 143 008 | 5143 | 800 | B | 76 | 2018 | 276,9 | 2x2"1/8 | X | - | 2078 |
| **SN 08Y P14 B2** | **562,6** | 46 | 14 | | 10998 | 152 430 | 7441 | 800 | B | 78 | 1766 | 242,3 | 2x2"1/8 | - | X | 1833 |
| **SN 08D P12 B2** | **572,7** | 51 | 12 | | 9498 | 169 289 | 9728 | 800 | C | 83 | 1514 | 207,6 | 2x2"1/8 | - | X | 1571 |
| **SN 08D P14 A2** | **584,1** | 51 | 14 | | 8838 | 181 568 | 11798 | 800 | C | 83 | 1413 | 193,8 | 2x2"1/8 | - | X | 1603 |
| **SE 12D P16 B3** | **592,3** | 44 | 16 | | 12498 | 132 923 | 5230 | 800 | A | 76 | 2691 | 369,2 | 2x2"5/8 | - | X | 2280 |
| **SN 08Y P14 B3** | **598,9** | 46 | 14 | | 10998 | 139 952 | 7572 | 800 | B | 78 | 2355 | 323,0 | 2x2"1/8 | - | X | 2011 |
| **SN 08D P16 B1** | **616,3** | 52 | 16 | | 12342 | 241 037 | 12559 | 800 | C | 84 | 1346 | 184,6 | 2x2"1/8 | X | - | 1874 |
| **SN 08D P12 B3** | **632,0** | 51 | 12 | | 9498 | 158 770 | 10025 | 800 | C | 83 | 2018 | 276,9 | 2x2"1/8 | - | X | 1732 |
| **SN 08Y P16 B2** | **643,0** | 47 | 16 | | 12342 | 174 206 | 8504 | 800 | B | 79 | 2018 | 276,9 | 2x2"1/8 | X | - | 2078 |
| **SN 08D P14 B2** | **668,2** | 51 | 14 | | 10998 | 197 504 | 11350 | 800 | C | 83 | 1766 | 242,3 | 2x2"1/8 | - | X | 1833 |
| **SN 08Y P16 B3** | **684,4** | 47 | 16 | | 12498 | 159 945 | 8654 | 800 | B | 79 | 2691 | 369,2 | 2x2"5/8 | - | X | 2280 |
| **SN 08D P16 A3** | **729,7** | 52 | 16 | | 10038 | 189 137 | 14012 | 800 | C | 84 | 2153 | 295,3 | 2x2"1/8 | - | X | 1931 |
| **SN 08D P14 B3** | **737,3** | 51 | 14 | | 10998 | 185 232 | 11696 | 800 | C | 83 | 2355 | 323,0 | 2x2"1/8 | - | X | 2011 |
| **SN 08D P16 B2** | **763,7** | 52 | 16 | | 12342 | 225 719 | 12971 | 800 | C | 84 | 2018 | 276,9 | 2x2"1/8 | X | - | 2078 |
| **SN 08D P16 B3** | **842,6** | 52 | 16 | | 12498 | 211 693 | 13367 | 800 | C | 84 | 2691 | 369,2 | 2x2"5/8 | - | X | 2280 |
| **SN 08D P16 B4** | **876,4** | 52 | 16 | | 12498 | 198 423 | 13737 | 800 | C | 84 | 3364 | 461,4 | 2x2"5/8 | - | X | 2484 |

**SN 08D :** *660 rpm - 990 W max. - 2,37 A max. (4)*
**SE 12D :** *435 rpm - 360 W max. - 1,12 A max. (4)*
**SE 16D :** *360 rpm - 235 W max. - 0,65 A max. (4)*
**SN 08Y :** *485 rpm - 580 W max. - 1,21 A max. (4)*
**SU 12Y :** *340 rpm - 200 W max. - 0,47 A max. (4)*
**SU 16Y :** *255 rpm - 105 W max. - 0,25 A max. (4)*

*(1) Capacities are expressed in kW for R404A with DT1 = 15 K. They are equal to the capacities measured in accordance with standard CEN EN 327.*
*"DT1" represents the difference between the ambient air temperature and the condensation temperature considered equal at an equivalent condenser inlet pressure.*

*(2) Sound pressure level in dB(A) measured at 10 m, line of sight, on a reflective parallelepiped measurement surface, given for information only. Values measured under nominal operating conditions with clean coils and rated voltage.*
*(3) Power required for all motors.*
*(4) Setting of overload protection levels.*

| M60 | M25 | M26 | MTH | IRP | C2V | SCU | MCI | BAE | BXT | REH | RE .. | ECB | MEC | CMP | RP1 | RP2 | RP3 | MSK |
|---|---|---|---|---|---|---|---|---|---|---|---|---|---|---|---|---|---|---|
| | | | O | O | O | O | O | O | | O | O | O | O | O | O | O | O | O |

## Type of module: A
### Vertical air flow

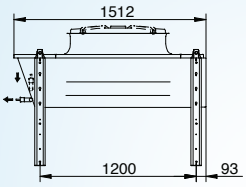


... L01 A... / ... P02 A...

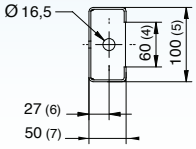


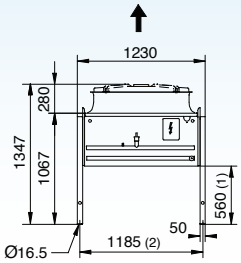


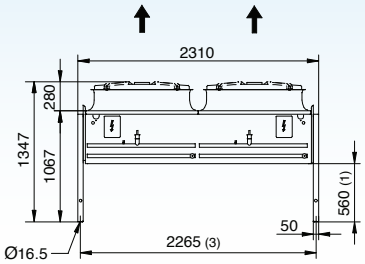


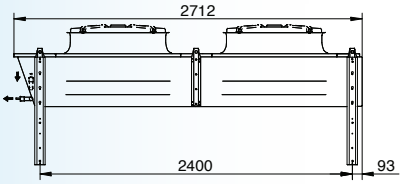


... L02 A... / ... P04 A...

| OPTIONS | (1) | (2) | (3) | (4) | (5) | (6) | (7) |
|---|---|---|---|---|---|---|---|
| REH | 800 | 1185 | 2265 | 60 | 100 | 27 | 50 |
| RE2 | 1400 | 1205 | 2285 | 90 | 130 | 37 | 70 |
| RE3 | 1900 | 1205 | 2285 | 90 | 130 | 37 | 70 |
| RE4 | 2400 | 1205 | 2285 | 90 | 130 | 37 | 80 |

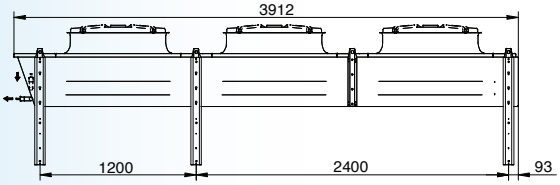


... L03 A... / ... P06 A...

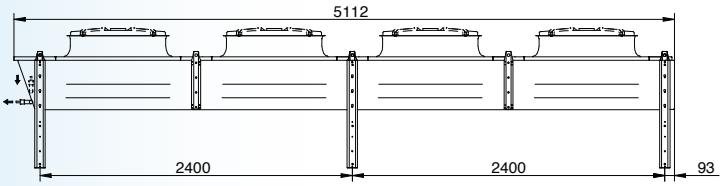


... L04 A... / ... P08 A...

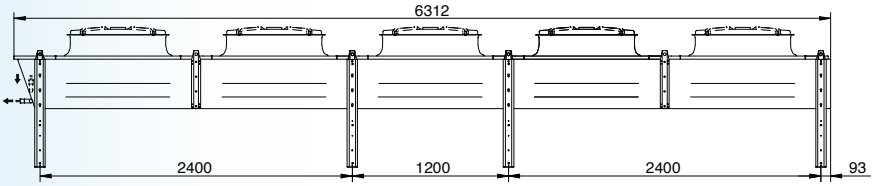


... L05 A... / ... P10 A...

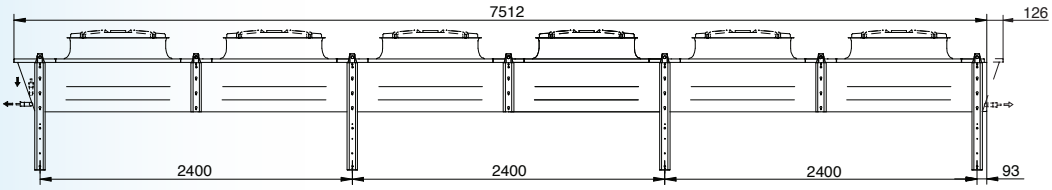


... L06 A... / ... P12 A...

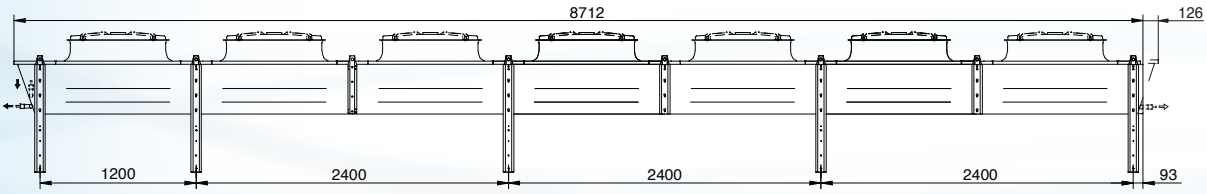


... P14 A...

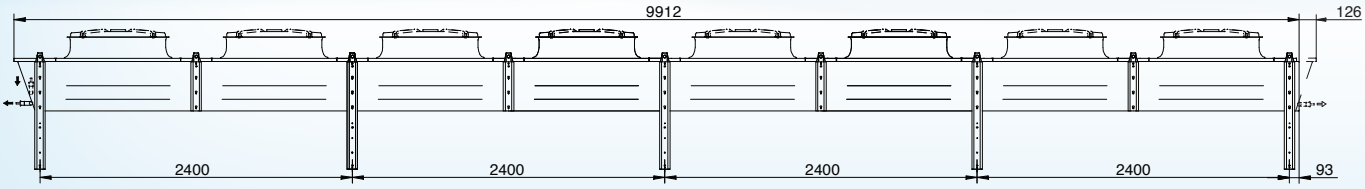


... P16 A...

## Type of module: A
### Horizontal air flow

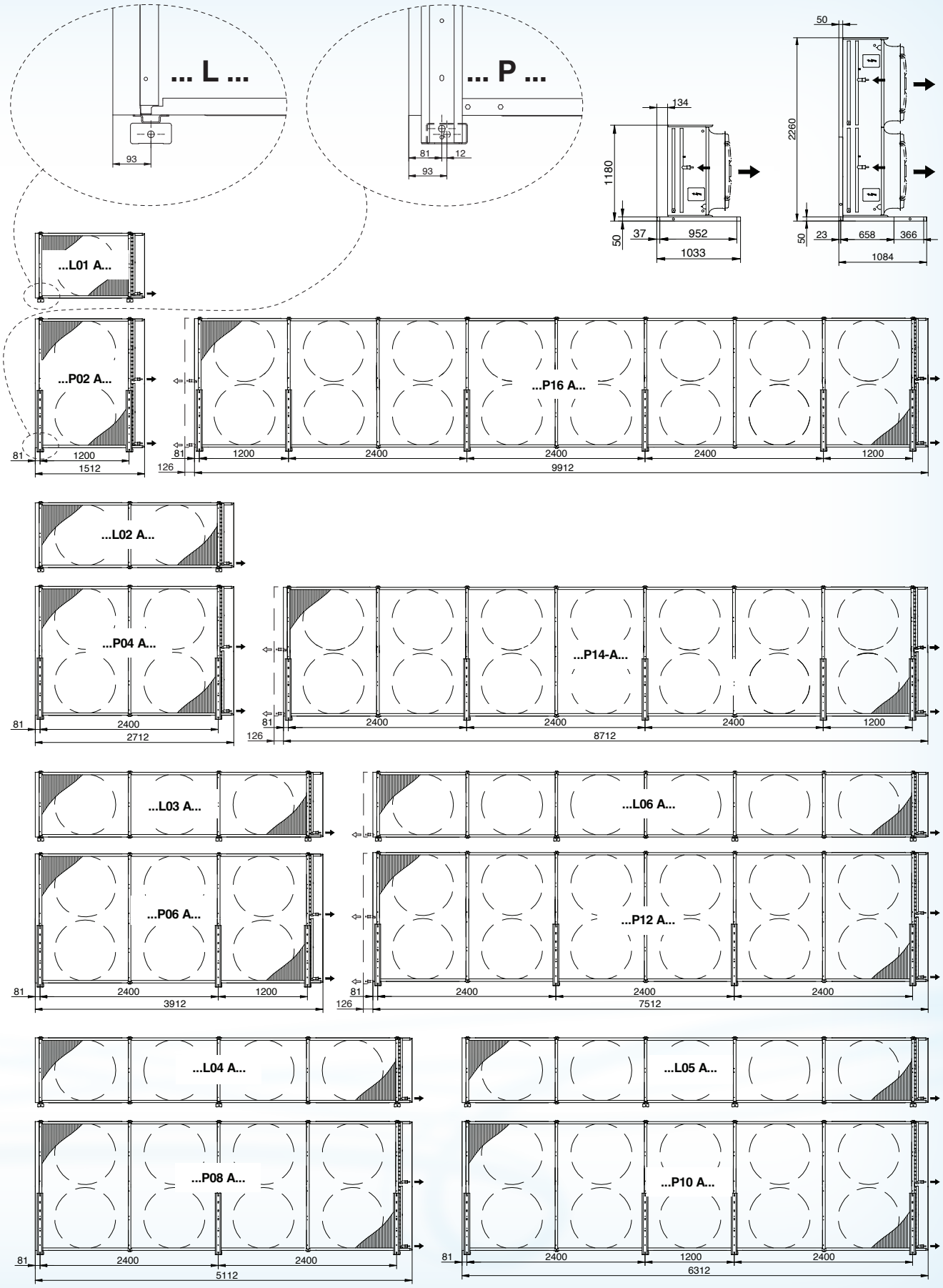

## Type of module: B
### Vertical air flow

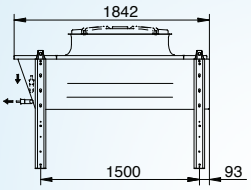


... L01 B... / ... P02 B...

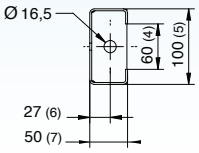


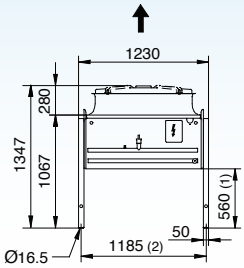


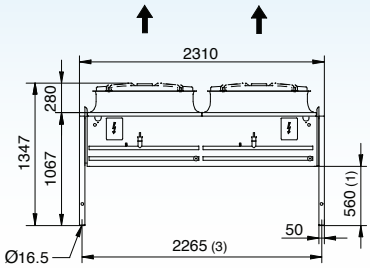


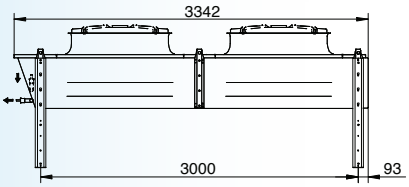


... L02 B... / ... P04 B...

| OPTIONS | (1) | (2) | (3) | (4) | (5) | (6) | (7) |
|---|---|---|---|---|---|---|---|
| REH | 800 | 1185 | 2265 | 60 | 100 | 27 | 50 |
| RE2 | 1400 | 1205 | 2285 | 90 | 130 | 37 | 70 |
| RE3 | 1900 | 1205 | 2285 | 90 | 130 | 37 | 70 |
| RE4 | 2400 | 1205 | 2285 | 90 | 130 | 37 | 80 |

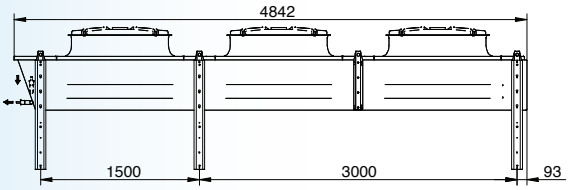


... L03 B... / ... P06 B...

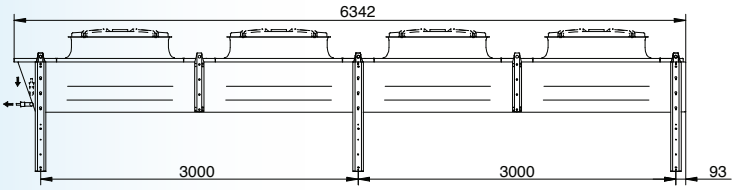


... L04 B... / ... P08 B...

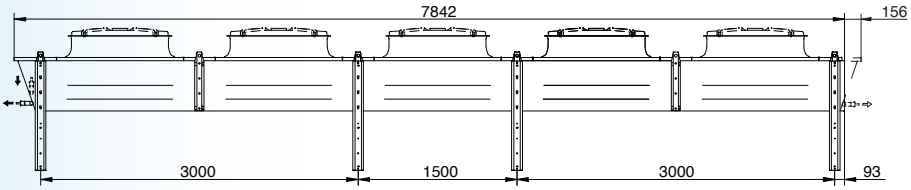


... L05 B... / ... P10 B...

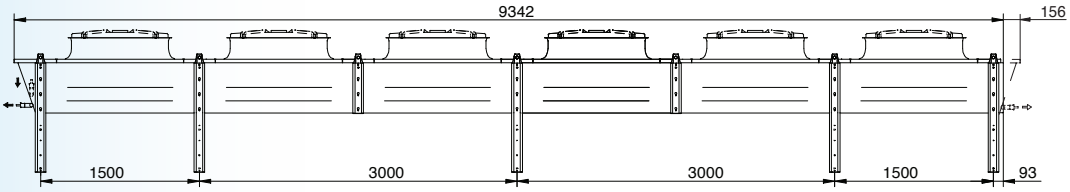


... P12 B...

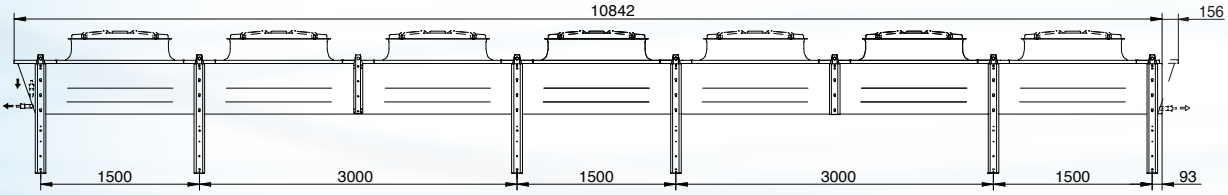


... P14 B...

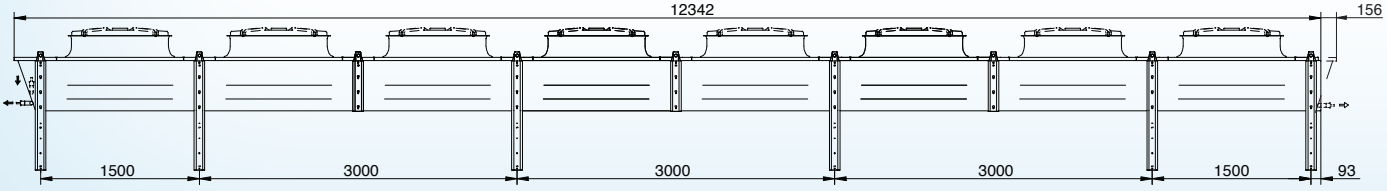


... P16 B...

## Type of module: B
### Horizontal air flow

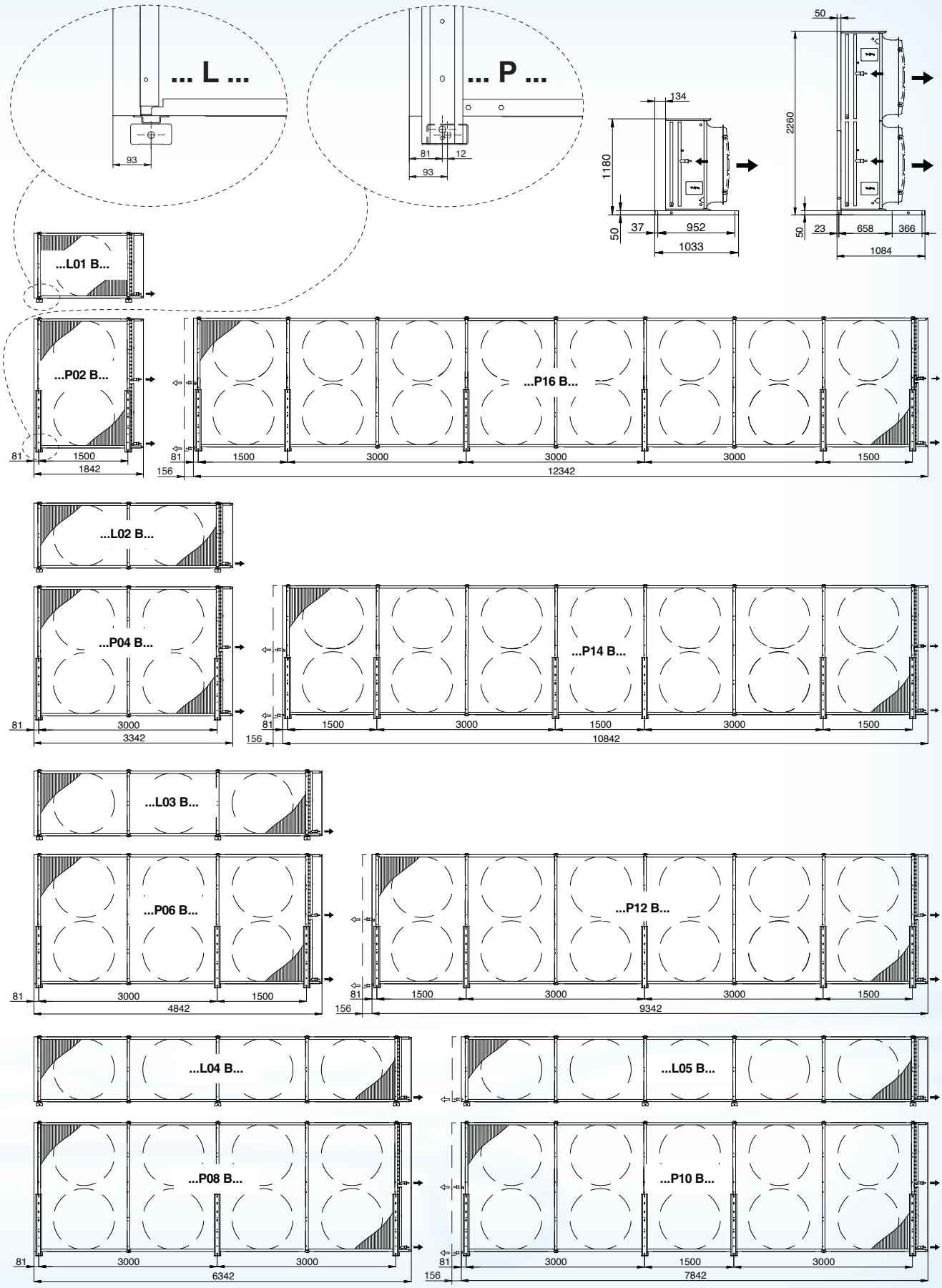

## Type of module: D
### Vertical air flow

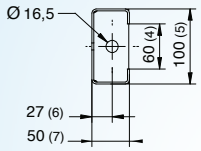


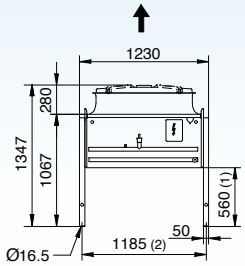


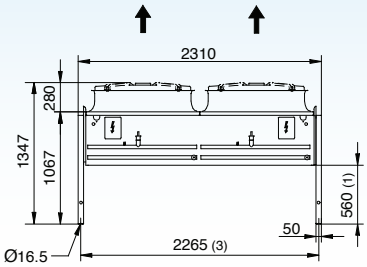


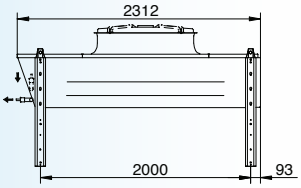


**... L01 D... / ... P02 D...**

| OPTIONS | (1) | (2) | (3) | (4) | (5) | (6) | (7) |
|---|---|---|---|---|---|---|---|
| REH | 800 | 1185 | 2265 | 60 | 100 | 27 | 50 |
| RE2 | 1400 | 1205 | 2285 | 90 | 130 | 37 | 70 |
| RE3 | 1900 | 1205 | 2285 | 90 | 130 | 37 | 70 |
| RE4 | 2400 | 1205 | 2285 | 90 | 130 | 37 | 80 |

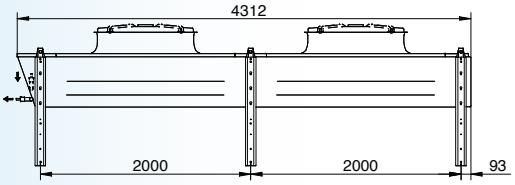


**... L02 D... / ... P04 D...**

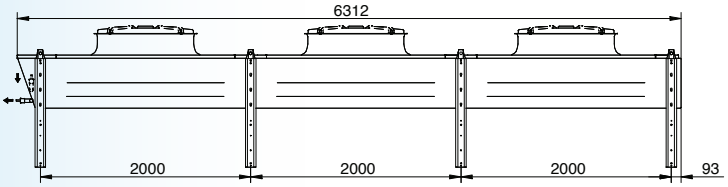


**... L03 D... / ... P06 D...**

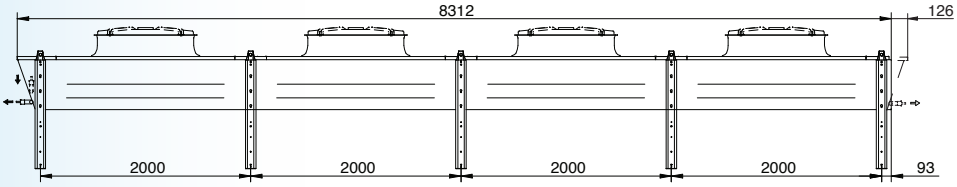


**... L04 D... / ... P08 D...**

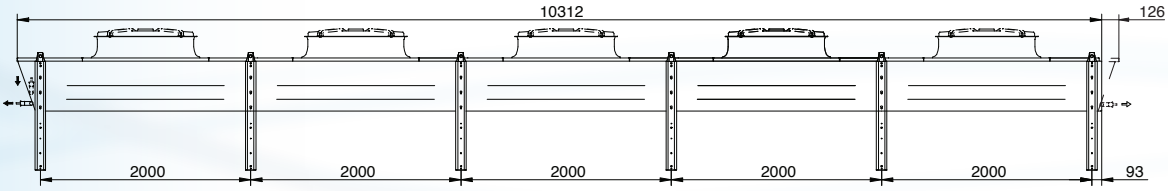


**... P10 D...**

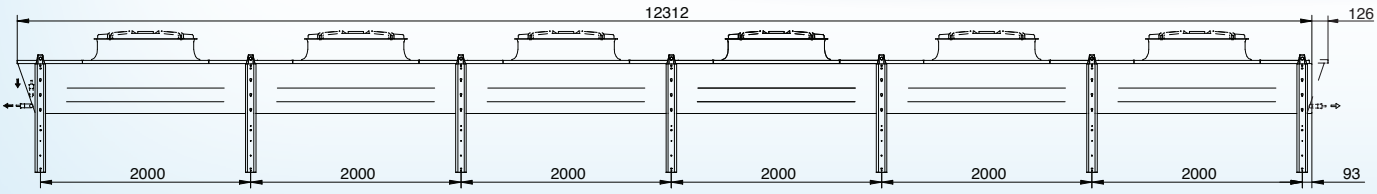


**... P12 D...**

## Type of module: D
### Horizontal air flow

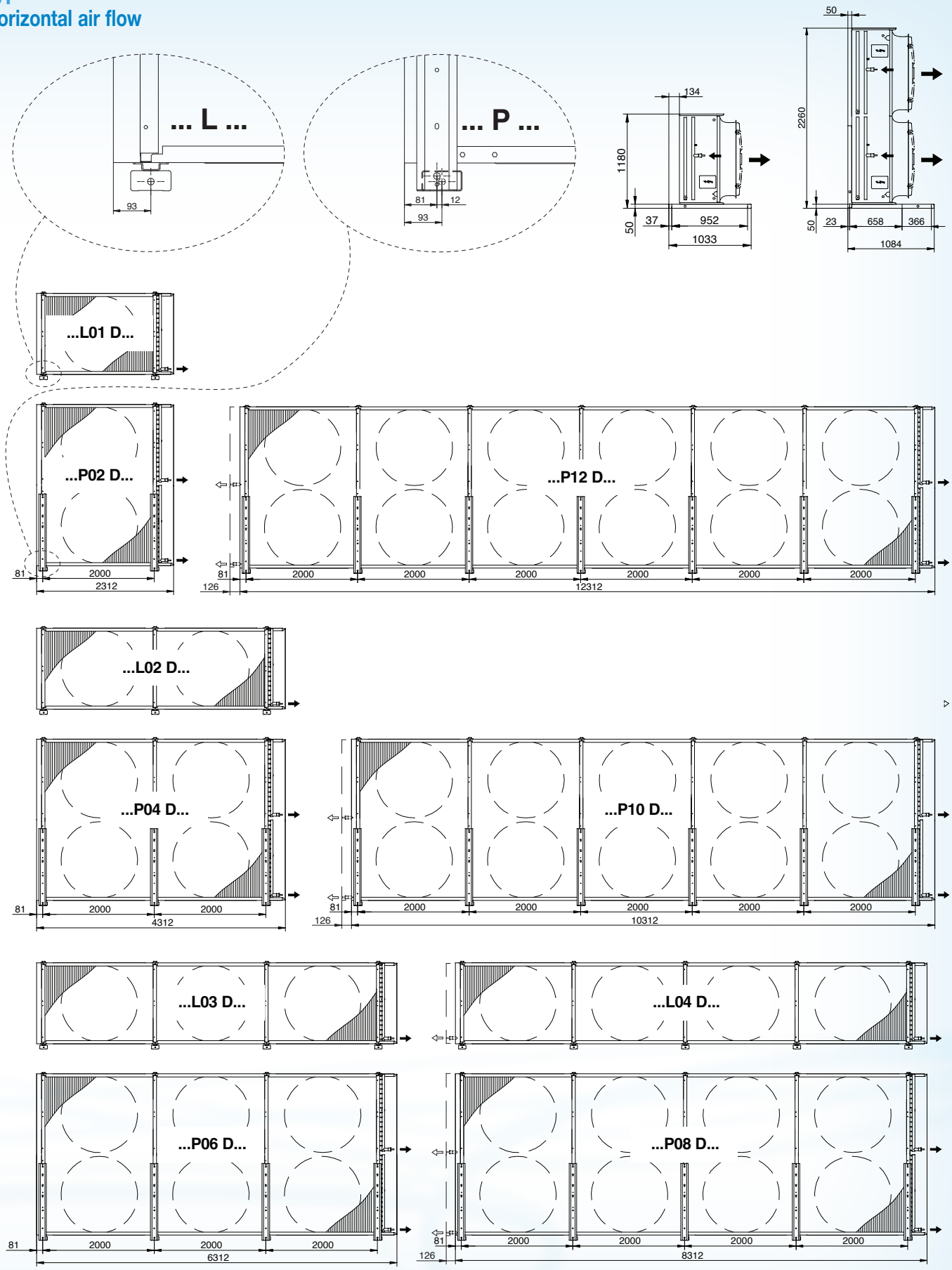

HEATCRAFT™
Worldwide Refrigeration

# Centrifugal fan condenser

## CCT range

- Centrifugal fans with available air pressure of up to 150 Pa.
- 2 blowing directions possible and 8 air inlet/outlet combinations.
- The unit may be removed (DEM option) for installation in difficult access zones.

4 138 kW

FRIGA-BOHN

HYFRA® PEDIA

HK® REFRIGERATION

Heatcraft reserves itself the right to make changes at any time without preliminary notice - Photos non-contractual

## Market segments

*FFS Bars - Restaurants – Corner shops – Mini-markets*
*FSM Hard Discount - Supermarkets - Hypermarkets*

## Designation

# CCT 268(1) V1(2)

(2) Model
(3) Air direction

## Description

### Casing

- The casing is made of galvanized sheet steel.
- All components of the CCT range are designed for exposure to adverse weather conditions.

### Ventilation

- Centrifugal fans: available pressure of up to 150 Pascals, performance adapted.
- Fans of the direct-drive, "double inlet" type with a rotation speed of 1,000 rpm.
- Connections for textile ducts.
- Enclosed motors with incorporated thermal overload protection, 230V/1/50Hz (230-400V/3/50Hz for CCT 201 - 283 - 402 - 478 - 566 - 603 - 717 - 849 – 956 and 1132), IP 54, class F, permanently lubricated.
- Electrical connections factory-wired to an easily accessible switching box (three-phase motor: factory wired to 400V).
- In order to facilitate pressure control with fan stoppage, the turbines are separated with a baffler to avoid air by-pass.

### Coil

- The condensers of the CCT range are equipped with a high efficiency coil composed of profiled aluminium fins spaced at 2.12 mm, crimped onto staggered copper tubes 3/8" (9.53 mm) to optimize the heat transfer coefficient.
- Brazed connections.
- Pressure tapping point.

In order to facilitate pressure control with fan stoppage, the turbines are separated with a baffler to avoid air by-pass.

## Certifications

*Range not concerned by Eurovent certification.*

## Advantages

### Installation

For installations with difficult access, the condenser of the CCT range may be quickly removed and refitted on site.

Two installation positions, vertical air or horizontal air, with four blower outlet directions possible (to be specified when ordering):
**V1, V2, V3, V4** or **H1, H2, H3, H4**

Possibility of modifying the air outlet position on site.

### Servicing / Maintenance

- Easy access to all components of the CCT range for commissioning, maintenance and cleaning.

## Options

| Kit | Factory | |
|---|---|---|
| | | **Casing** |
| | UCC | Compressor casing (except CCT 528 and CCT 603 to CCT 1132). |
| | PEI | Grey paint RAL 9002. |
| | IPH | Noise insulation. |
| | FLA | Suction filters. |
| | DEM | Unit removal possible. |
| | ECB | Full crate packaging. |
| | | **Ventilation** |
| | CMU | Motors factory wired. |
| VPS | | Blower deflector vanes. |
| | | **Coil** |
| | MCI | Multi-circuits. |
| | BAE | Protected fins. |
| | BXT | Blygold Polual XT coil protection. |
| | | **Other options** |
| | | Please contact us for details. |

## Vertical air

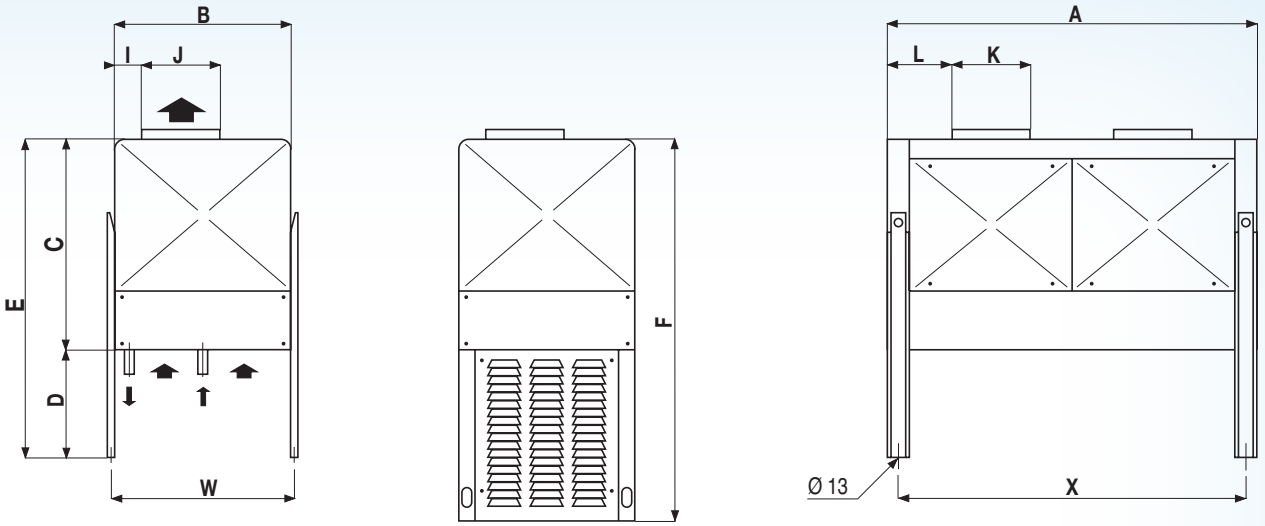


**UCC** option

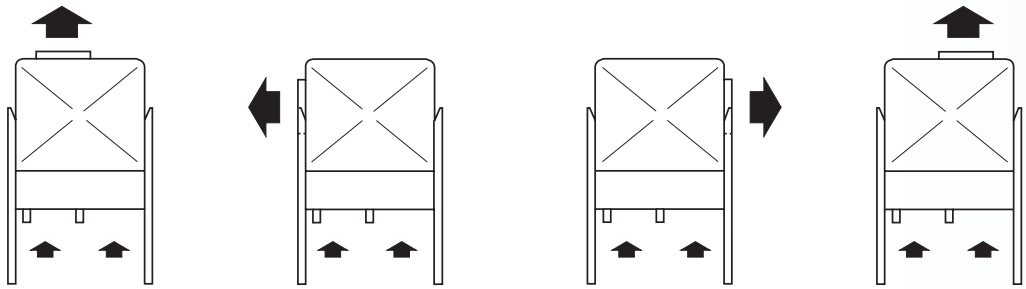

**V 1** **V 2** **V 3** **V 4**

## Horizontal air

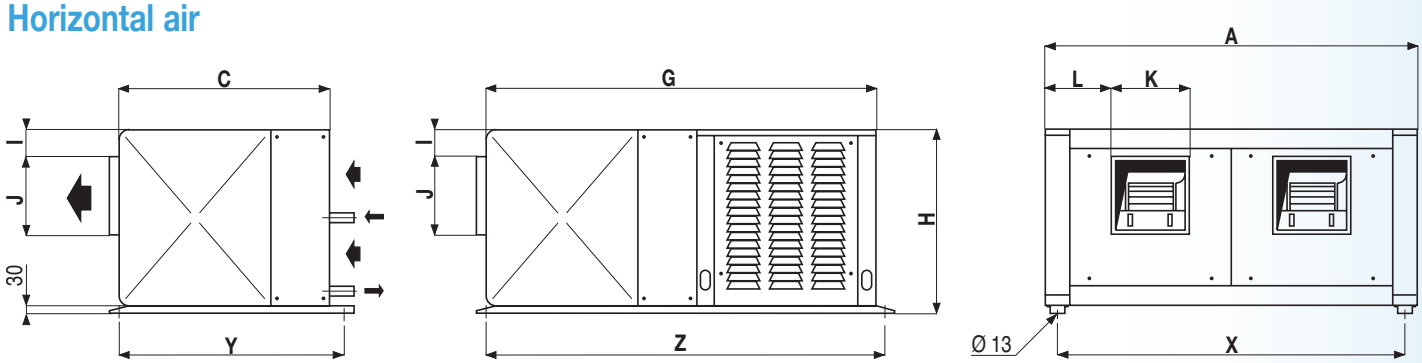


**UCC** option

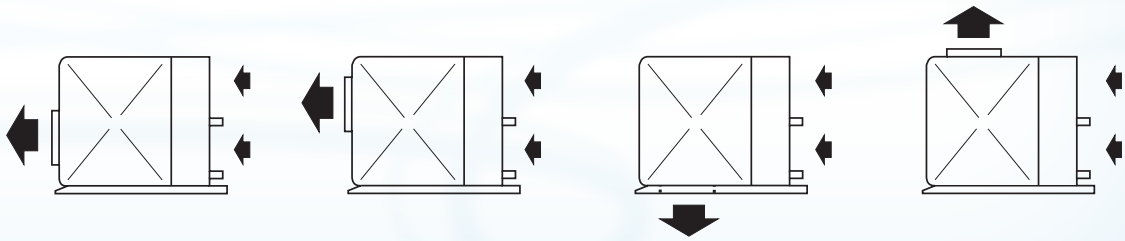

**H 1** **H 2** **H 3** **H 4**

## CCT ...

| | | CCT ... | 39 | 49 | 65 | 77 | 86 | 102 | 130 | 134 | 153 | 172 | 176 | 201 | 204 | 229 | 268 |
|---|---|---|---|---|---|---|---|---|---|---|---|---|---|---|---|---|---|
| **0 Pa** (1) **DT1 = 15 K** (2) R404A | Capacity | kW | **4,8** | **6,0** | **8,1** | **9,3** | **10,1** | **12,7** | **16,2** | **15,5** | **17,3** | **20,3** | **20,4** | **25,5** | **25,4** | **26,5** | **31,0** |
| | Input power | kW | 0,32 | 0,32 | 0,47 | 0,46 | 0,42 | 0,50 | 0,93 | 0,65 | 0,61 | 0,85 | 0,70 | 2,25 | 1,00 | 1,35 | 1,30 |
| | Air flow | $m^3/h$ | 1550 | 1550 | 2290 | 2230 | 2600 | 2920 | 4580 | 4050 | 3820 | 5200 | 4400 | 7600 | 5840 | 5700 | 8100 |
| | Acoustic **Lp** (3) | dB(A) | 41 | 41 | 40 | 40 | 40 | 40 | 43 | 43 | 43 | 43 | 43 | 48 | 43 | 46 | 46 |
| | Acoustic **Lw** | dB(A) | 73 | 73 | 72 | 72 | 72 | 72 | 75 | 75 | 75 | 75 | 75 | 80 | 75 | 78 | 78 |
| **50 Pa** (1) **DT1 = 15 K** (2) R404A | Capacity | kW | **4,7** | **5,9** | **7,7** | **8,8** | **9,4** | **11,7** | **15,5** | **14,7** | **16,2** | **18,9** | **19,3** | **24,8** | **23,4** | **26,0** | **29,3** |
| | Input power | kW | 0,32 | 0,32 | 0,45 | 0,44 | 0,39 | 0,43 | 0,90 | 0,60 | 0,57 | 0,77 | 0,63 | 2,05 | 0,86 | 1,28 | 1,20 |
| | Air flow | $m^3/h$ | 1500 | 1470 | 2110 | 2050 | 2300 | 2650 | 4220 | 3750 | 3450 | 4600 | 4040 | 7250 | 5300 | 5350 | 7500 |
| | Acoustic **Lp** (3) | dB(A) | 41 | 41 | 39 | 39 | 39 | 40 | 42 | 42 | 42 | 42 | 43 | 48 | 43 | 45 | 45 |
| | Acoustic **Lw** | dB(A) | 73 | 73 | 71 | 71 | 71 | 72 | 74 | 74 | 74 | 74 | 75 | 80 | 75 | 77 | 77 |
| **100 Pa** (1) **DT1 = 15 K** (2) R404A | Capacity | kW | **4,5** | **5,6** | **7,1** | **8,0** | **8,2** | **10,4** | **14,3** | **13,5** | **14,8** | **16,4** | **17,3** | **23,8** | **20,8** | **25,0** | **26,9** |
| | Input power | kW | 0,30 | 0,30 | 0,42 | 0,42 | 0,32 | 0,38 | 0,84 | 0,54 | 0,50 | 0,64 | 0,57 | 1,80 | 0,76 | 1,22 | 1,08 |
| | Air flow | $m^3/h$ | 1400 | 1380 | 1890 | 1800 | 1900 | 2260 | 3780 | 3300 | 3060 | 3800 | 3620 | 6750 | 4520 | 5000 | 6600 |
| | Acoustic **Lp** (3) | dB(A) | 41 | 41 | 38 | 38 | 37 | 39 | 41 | 41 | 40 | 40 | 42 | 47 | 42 | 43 | 44 |
| | Acoustic **Lw** | dB(A) | 73 | 73 | 70 | 70 | 69 | 71 | 73 | 73 | 72 | 72 | 74 | 79 | 74 | 75 | 76 |
| **150 Pa** (1) **DT1 = 15 K** (2) R404A | Capacity | kW | **4,1** | **5,1** | **6,0** | **6,5** | **-** | **7,5** | **12,1** | **12,0** | **12,7** | **-** | **15,1** | **22,8** | **14,9** | **24,1** | **24,0** |
| | Input power | kW | 0,27 | 0,27 | 0,39 | 0,38 | - | 0,31 | 0,78 | 0,47 | 0,45 | - | 0,49 | 1,60 | 0,62 | 1,09 | 0,94 |
| | Air flow | $m^3/h$ | 1250 | 1220 | 1500 | 1350 | - | 1490 | 3000 | 2700 | 2560 | - | 3100 | 6300 | 2980 | 4650 | 5400 |
| | Acoustic **Lp** (3) | dB(A) | 41 | 41 | 38 | 38 | - | 36 | 39 | 39 | 38 | - | 40 | 45 | 39 | 42 | 42 |
| | Acoustic **Lw** | dB(A) | 73 | 73 | 70 | 70 | - | 68 | 71 | 71 | 70 | - | 72 | 77 | 71 | 74 | 74 |

| | | CCT ... | 39 | 49 | 65 | 77 | 86 | 102 | 130 | 134 | 153 | 172 | 176 | 201 | 204 | 229 | 268 |
|---|---|---|---|---|---|---|---|---|---|---|---|---|---|---|---|---|---|
| Surface | | $m^2$ | 12,5 | 18,7 | 18,7 | 25,0 | 25,0 | 39,9 | 37,4 | 39,9 | 59,9 | 50,0 | 89,8 | 49,4 | 79,8 | 89,8 | 79,8 |
| Circuit volume | | $dm^3$ | 1,2 | 1,7 | 1,7 | 2,3 | 2,3 | 3,6 | 3,4 | 3,6 | 5,4 | 4,5 | 8,1 | 4,5 | 7,2 | 8,1 | 7,2 |
| Turbine | | Nb | 1 | 1 | 1 | 1 | 1 | 1 | 2 | 1 | 1 | 2 | 1 | 1 | 2 | 1 | 2 |
| | 230V/1 | W/u | 475 | 475 | 500 | 500 | 500 | 500 | 500 | 750 | 750 | 500 | 750 | - | 500 | 1500 | 750 |
| | 50 Hz | A max/u | 2,3 | 2,3 | 2,5 | 2,5 | 2,5 | 2,5 | 2,5 | 4,0 | 4,0 | 2,5 | 4,0 | - | 2,5 | 7,5 | 4,0 |
| | 230-400V/3 | W/u | - | - | - | - | - | - | - | - | - | - | - | 2400 | - | - | - |
| | 50 Hz | A max/u | - | - | - | - | - | - | - | - | - | - | - | 7/4 | - | - | - |
| Net weight | | kg | 47 | 49 | 55 | 57 | 58 | 76 | 96 | 80 | 87 | 102 | 106 | 108 | 134 | 117 | 142 |
| M (4) | | | 1 | 2 | 2 | 2 | 2 | 3 | 3 | 3 | 4 | 4 | 6 | 6 | 6 | 6 | 6 |
| Dimensions | A | mm | 690 | 690 | 690 | 690 | 690 | 830 | 1190 | 830 | 830 | 1190 | 1150 | 1150 | 1470 | 1150 | 1470 |
| | B | mm | 590 | 590 | 590 | 590 | 590 | 695 | 590 | 695 | 695 | 590 | 695 | 795 | 695 | 695 | 695 |
| | C | mm | 660 | 660 | 660 | 660 | 660 | 835 | 660 | 835 | 835 | 660 | 835 | 835 | 835 | 835 | 835 |
| | D | mm | 340 | 340 | 340 | 340 | 340 | 400 | 340 | 400 | 400 | 340 | 400 | 400 | 400 | 400 | 400 |
| | E | mm | 1000 | 1000 | 1000 | 1000 | 1000 | 1235 | 1000 | 1235 | 1235 | 1000 | 1235 | 1235 | 1235 | 1235 | 1235 |
| | F | mm | 1225 | 1225 | 1225 | 1225 | 1225 | 1500 | 1225 | 1500 | 1500 | 1225 | 1500 | 1600 | 1500 | 1500 | 1500 |
| | G | mm | 1250 | 1250 | 1250 | 1250 | 1250 | 1530 | 1250 | 1530 | 1530 | 1250 | 1530 | 1630 | 1530 | 1530 | 1530 |
| | H | mm | 615 | 615 | 615 | 615 | 615 | 725 | 615 | 725 | 725 | 615 | 725 | 825 | 725 | 725 | 725 |
| | I | mm | 103 | 103 | 103 | 103 | 103 | 103 | 103 | 103 | 103 | 103 | 103 | 153 | 103 | 103 | 103 |
| | J | mm | 222 | 222 | 260 | 260 | 260 | 260 | 260 | 290 | 290 | 260 | 290 | 342 | 260 | 342 | 290 |
| | K | mm | 234 | 234 | 234 | 234 | 300 | 300 | 234 | 334 | 334 | 300 | 334 | 396 | 300 | 396 | 334 |
| | L | mm | 228 | 228 | 228 | 228 | 195 | 265 | 228 | 248 | 248 | 195 | 408 | 377 | 265 | 377 | 248 |
| | W | mm | 610 | 610 | 610 | 610 | 610 | 725 | 610 | 725 | 725 | 610 | 725 | 825 | 725 | 725 | 725 |
| | X | mm | 595 | 595 | 595 | 595 | 595 | 735 | 1095 | 735 | 735 | 1095 | 1055 | 1055 | 1375 | 1055 | 1375 |
| | Y | mm | 725 | 725 | 725 | 725 | 725 | 900 | 725 | 900 | 900 | 725 | 900 | 900 | 900 | 900 | 900 |
| | Z | mm | 1295 | 1295 | 1295 | 1295 | 1295 | 1575 | 1295 | 1575 | 1575 | 1295 | 1575 | 1675 | 1575 | 1575 | 1575 |
| Inlet | | Ø | 1/2" | 5/8" | 5/8" | 7/8" | 7/8" | 7/8" | 7/8" | 7/8" | 1 1/8" | 1 1/8" | 1 1/8" | 1 1/8" | 1 1/8" | 1 1/8" | 1 1/8" |
| Outlet | | Ø | 3/8" | 1/2" | 1/2" | 5/8" | 5/8" | 5/8" | 5/8" | 5/8" | 7/8" | 7/8" | 7/8" | 7/8" | 7/8" | 7/8" | 7/8" |

*(1) Additional pressure available in Pascals.*
*2) DT1 = difference between the ambient air temperature and the condensation temperature considered equal at an equivalent condenser inlet pressure.*
*(3) Sound pressure level in dB(A) at 10 m, in direct light of sight on a non-reflective surface.*
*(4) Multi-circuit condensers: M = maximum number of circuits.*

| UCC | PEI | IPH | FLA | DEM | ECB | VPS | MCI | BAE | BXT |
|---|---|---|---|---|---|---|---|---|---|
| O | O | O | O | O | O | O | O | O | O |

## CCT ...

| | | CCT ... | 283 | 306 | 352 | 402 | 458 | 478 | 528 | 566 | 603 | 687 | 717 | 849 | 956 | 1132 |
|---|---|---|---|---|---|---|---|---|---|---|---|---|---|---|---|---|
| 0 Pa (1) DT1 = 15 K (2) R404A | Capacity | kW | **33,9** | **34,8** | **40,8** | **51,2** | **53,2** | **59,3** | **61,3** | **67,6** | **76,8** | **80,0** | **89,0** | **101,2** | **118,5** | **134,7** |
| | Input power | kW | 1,85 | 1,22 | 1,40 | 4,50 | 2,70 | 4,20 | 2,10 | 3,70 | 6,75 | 4,05 | 6,30 | 5,55 | 8,40 | 7,40 |
| | Air flow | $m^3/h$ | 7150 | 7640 | 8800 | 15200 | 11400 | 14900 | 13200 | 14300 | 22800 | 17100 | 22350 | 21450 | 29800 | 28600 |
| | Acoustic **Lp** (3) | dB(A) | 48 | 46 | 46 | 51 | 49 | 51 | 48 | 51 | 53 | 51 | 53 | 53 | 54 | 54 |
| | Acoustic **Lw** | dB(A) | 80 | 78 | 78 | 83 | 81 | 83 | 80 | 83 | 85 | 83 | 85 | 85 | 86 | 86 |
| 50 Pa (1) DT1 = 15 K (2) R404A | Capacity | kW | **32,3** | **32,4** | **38,8** | **49,8** | **52,1** | **57,1** | **58,3** | **64,5** | **74,4** | **77,5** | **85,7** | **96,6** | **114,5** | **129,8** |
| | Input power | kW | 1,65 | 1,13 | 1,26 | 4,10 | 2,56 | 3,80 | 1,89 | 3,30 | 6,15 | 3,84 | 5,70 | 4,95 | 7,60 | 6,60 |
| | Air flow | $m^3/h$ | 6700 | 6900 | 8080 | 14500 | 10700 | 14100 | 12120 | 13400 | 21750 | 16050 | 21150 | 20100 | 28200 | 26800 |
| | Acoustic **Lp** (3) | dB(A) | 47 | 45 | 46 | 51 | 48 | 51 | 48 | 50 | 53 | 50 | 53 | 51 | 54 | 53 |
| | Acoustic **Lw** | dB(A) | 79 | 77 | 78 | 83 | 80 | 83 | 80 | 82 | 85 | 82 | 85 | 83 | 86 | 85 |
| 100 Pa (1) DT1 = 15 K (2) R404A | Capacity | kW | **30,7** | **29,5** | **34,7** | **47,8** | **50,1** | **55,1** | **52,2** | **61,4** | **71,5** | **75,4** | **82,7** | **92,9** | **110,4** | **123,4** |
| | Input power | kW | 1,55 | 0,99 | 1,14 | 3,60 | 2,43 | 3,35 | 1,71 | 3,10 | 5,40 | 3,65 | 5,03 | 4,65 | 6,70 | 6,20 |
| | Air flow | $m^3/h$ | 6250 | 6120 | 7240 | 13500 | 10000 | 13400 | 10860 | 12500 | 20250 | 15000 | 20100 | 18750 | 26800 | 25000 |
| | Acoustic **Lp** (3) | dB(A) | 45 | 43 | 45 | 50 | 46 | 50 | 47 | 48 | 51 | 48 | 51 | 50 | 53 | 51 |
| | Acoustic **Lw** | dB(A) | 77 | 75 | 77 | 82 | 78 | 82 | 79 | 80 | 83 | 80 | 83 | 82 | 85 | 83 |
| 150 Pa (1) DT1 = 15 K (2) R404A | Capacity | kW | **29,2** | **25,2** | **30,3** | **45,8** | **48,3** | **51,9** | **45,5** | **58,5** | **68,5** | **72,7** | **77,6** | **87,5** | **104,0** | **116,2** |
| | Input power | kW | 1,40 | 0,89 | 0,97 | 3,20 | 2,18 | 3,05 | 1,46 | 2,80 | 4,80 | 3,27 | 4,58 | 4,20 | 6,10 | 5,60 |
| | Air flow | $m^3/h$ | 5700 | 5120 | 6200 | 12600 | 9300 | 12200 | 9300 | 11400 | 18900 | 13950 | 18300 | 17100 | 24400 | 22800 |
| | Acoustic **Lp** (3) | dB(A) | 44 | 42 | 43 | 48 | 45 | 48 | 45 | 47 | 50 | 47 | 50 | 49 | 51 | 50 |
| | Acoustic **Lw** | dB(A) | 76 | 74 | 75 | 80 | 77 | 80 | 77 | 79 | 82 | 79 | 82 | 81 | 83 | 82 |

| | | CCT ... | 283 | 306 | 352 | 402 | 458 | 478 | 528 | 566 | 603 | 687 | 717 | 849 | 956 | 1132 |
|---|---|---|---|---|---|---|---|---|---|---|---|---|---|---|---|---|
| Surface | | $m^2$ | 98,7 | 119,8 | 179,6 | 98,8 | 179,6 | 131,6 | 269,4 | 197,4 | 148,2 | 269,4 | 197,4 | 296,1 | 263,2 | 394,8 |
| Circuit volume | | $dm^3$ | 8,9 | 10,8 | 15,5 | 8,6 | 15,5 | 11,4 | 23,3 | 17,1 | 12,8 | 23,3 | 17,1 | 25,6 | 22,8 | 34,1 |
| Turbine | | Nb | 1 | 2 | 2 | 2 | 2 | 2 | 3 | 2 | 3 | 3 | 3 | 3 | 4 | 4 |
| | 230V/1 | W/u | - | 750 | 750 | - | 1500 | - | 750 | - | - | 1500 | - | - | - | - |
| | 50 Hz | A max/u | - | 4,0 | 4,0 | - | 7,5 | - | 4,0 | - | - | 7,5 | - | - | - | - |
| | 230-400V/3 | W/u | 2400 | - | - | 2400 | - | 2400 | - | 2400 | 2400 | - | 2400 | 2400 | 2400 | 2400 |
| | 50 Hz | A max/u | 7/4 | - | - | 7/4 | - | 7/4 | - | 7/4 | 7/4 | - | 7/4 | 7/4 | 7/4 | 7/4 |
| Net weight | | kg | 125 | 154 | 194 | 197 | 216 | 208 | 283 | 230 | 288 | 315 | 303 | 336 | 396 | 439 |
| M (4) | | | 7 | 8 | 9 | 10 | 12 | 14 | 18 | 14 | 14 | 18 | 18 | 21 | 18 | 28 |
| Dimensions | A | mm | 1150 | 1470 | 2110 | 2110 | 2110 | 2110 | 3070 | 2110 | 3070 | 3070 | 3070 | 3070 | 4030 | 4030 |
| | B | mm | 795 | 695 | 695 | 795 | 695 | 795 | 695 | 795 | 795 | 695 | 795 | 795 | 795 | 795 |
| | C | mm | 835 | 835 | 835 | 835 | 835 | 835 | 835 | 835 | 835 | 835 | 835 | 835 | 835 | 835 |
| | D | mm | 400 | 400 | 400 | 400 | 400 | 400 | 400 | 400 | 400 | 400 | 400 | 400 | 400 | 400 |
| | E | mm | 1235 | 1235 | 1235 | 1235 | 1235 | 1235 | 1235 | 1235 | 1235 | 1235 | 1235 | 1235 | 1235 | 1235 |
| | F | mm | 1600 | 1500 | 1500 | 1600 | 1500 | 1600 | - | 1600 | - | - | - | - | - | - |
| | G | mm | 1630 | 1530 | 1530 | 1630 | 1530 | 1630 | - | 1630 | - | - | - | - | - | - |
| | H | mm | 825 | 725 | 725 | 825 | 725 | 825 | 725 | 825 | 825 | 725 | 825 | 825 | 825 | 825 |
| | I | mm | 153 | 103 | 103 | 153 | 103 | 153 | 103 | 153 | 153 | 103 | 153 | 153 | 153 | 153 |
| | J | mm | 342 | 290 | 290 | 342 | 342 | 342 | 290 | 342 | 342 | 342 | 342 | 342 | 342 | 342 |
| | K | mm | 396 | 334 | 334 | 396 | 396 | 396 | 334 | 396 | 396 | 396 | 396 | 396 | 396 | 396 |
| | L | mm | 377 | 248 | 408 | 377 | 377 | 377 | 408 | 377 | 377 | 377 | 377 | 377 | 377 | 377 |
| | W | mm | 825 | 725 | 725 | 825 | 725 | 825 | 725 | 825 | 825 | 725 | 825 | 825 | 825 | 825 |
| | X | mm | 1055 | 1375 | 2015 | 2015 | 2015 | 2015 | 2975 | 2015 | 2975 | 2975 | 2975 | 2975 | 3935 | 3935 |
| | Y | mm | 900 | 900 | 900 | 900 | 900 | 900 | 900 | 900 | 900 | 900 | 900 | 900 | 900 | 900 |
| | Z | mm | 1675 | 1575 | 1575 | 1675 | 1575 | 1675 | - | 1675 | - | - | - | - | - | - |
| Inlet | | Ø | 1 1/8" | 1 1/8" | 1 3/8" | 1 3/8" | 1 3/8" | 1 3/8" | 1 5/8" | 1 5/8" | 1 5/8" | 1 5/8" | 1 5/8" | 1 5/8" | 2 1/8" | 2 1/8" |
| Outlet | | Ø | 7/8" | 7/8" | 1 1/8" | 1 1/8" | 1 1/8" | 1 1/8" | 1 3/8" | 1 3/8" | 1 3/8" | 1 3/8" | 1 3/8" | 1 3/8" | 1 5/8" | 1 5/8" |

*(1) Additional pressure available in Pascals.*
*2) DT1 = difference between the ambient air temperature and the condensation temperature considered equal at an equivalent condenser inlet pressure.*
*(3) Sound pressure level in dB(A) at 10 m, in direct light of sight on a non-reflective surface.*
*(4) Multi-circuit condensers: M = maximum number of circuits.*

| UCC* | PEI | IPH | FLA | DEM | ECB | VPS | MCI | BAE | BXT |
|---|---|---|---|---|---|---|---|---|---|
| O | O | O | O | O | O | O | O | O | O |

** Except CCT 528 and CCT 603 to CCT 1132*

HEATCRAFT™
Worldwide Refrigeration

# Centrifugal fan condenser

E Solutions
Efficiency • Environment

## Gamme CCV

- Totally removable, the CCV is specifically designed for use in tight spaces and difficult access zones.
- Reduced height and footprint.
- EC motors as standard offering optimum control for a low energy consumption.
- Low noise.
- Available air pressure of up to 200 Pa.

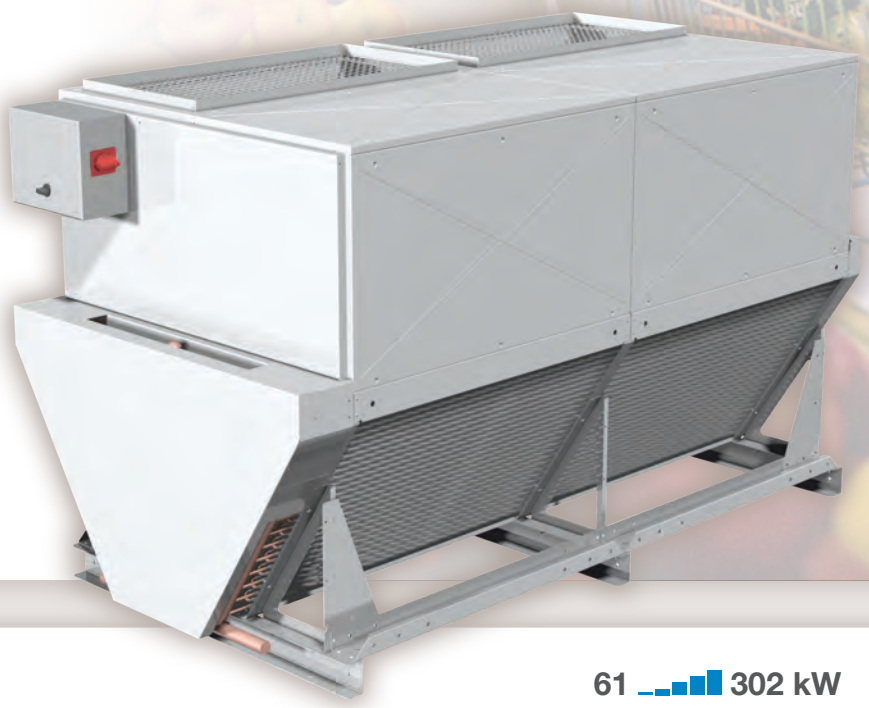

*Energy efficiency*
*Low noise level*

61 ▁▂▃▅▆ 302 kW

FRIGA-BOHN

HYFRA® PEDIA

HK® REFRIGERATION

Heatcraft reserves itself the right to make changes at any time without preliminary notice - Photos non-contractual

## Market segments

*FFS* *Bars - Restaurants – Corner shops – Mini-markets*
*FSM* *Hard Discount - Supermarkets - Hypermarkets*

## Designation

# CCV 4(1) V2(2)

(1) Number of fans
(2) Air direction

## Description

### Casing

- The casing is made of galvanized sheet steel.
- Hairpins and collectors are protected with removable sheet metal.
- Easy access to all components for commissioning, maintenance and cleaning.
- For installations with difficult access, the condenser may be quickly removed (coil, casing, fans) and refitted on site.
- Possibility to modify the air outlet position (V1, V2, V3, V4, V1+V4) using interchangeable panels (for combination V1+V4, a second set of "air outlet" panels is required, to be stipulated on the order form).

### Ventilation

- Centrifugal fans: available pressure of up to 200 Pascals, performance adapted.
- Three-phase motor, Ø 630 mm, IP 54, 380-480V/3/50-60 Hz, 2.9kW, 4.6A, 1,200 rpm.
- The fans are equipped with an electronic switching (EC) device.
- Electrical connections factory-wired to an easily accessible junction box.
- Each turbine is separated with a baffler to avoid air "by-pass".

### Coil

- The condensers of the CCV range are equipped with two high efficiency “V” configuration coils composed of profiled aluminium fins spaced at 2.12 mm, crimped onto staggered copper tubes 3/8" (9.53 mm) to optimize the heat transfer coefficient.
- Two coils, but only one inlet and one outlet.

### Environmental respect

Motor with electronic switching (EC):

- Optimum control of condensation pressure,
- Energy saving,
- Low noise level.

## Advantages

| Installation |
|---|
| Easy handling: the frame structure allows easy passage of the pallet truck for transport (1). |
| The CCV may be removed in 3 parts to allow easy passage of standard doors of 80 cm in width. |
| Compact unit, 2 coils in "V" configuration to optimize the footprint in the machine room. |
| The condenser may be installed on a refrigeration rack to limit the footprint. |
| Rapid commissioning: One inlet/outlet collector for both coils requiring only one connection. Left or right as required (2). |
| Interchangeable sheet metal panels, 5 air outlet combinations. |
| **Servicing / Maintenance** |
| Easy maintenance and cleaning thanks to unimpeded access to components. |
| The coil becomes accessible for easy cleaning by simply removing the two panel elements. |

## Certifications

*Range not concerned by Eurovent certification.*

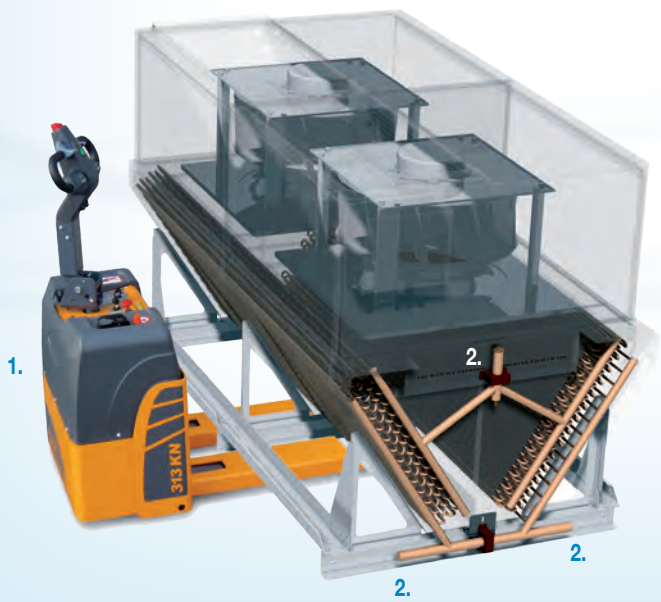


| Kit | Factory | Options |
|---|---|---|
| | | **Casing** |
| | PEI | Grey paint RAL 9002. |
| | IPH | Noise Insulation. |
| | ECB | Full crate packaging. |
| | | **Ventilation** |
| VPS | | Blower deflector vanes. |
| | CSC | Signal comparator. |
| PT1 | | Condensation pressure sensor (voltage 0-10V) |
| | | **Coil** |
| | MCI | Multi-circuits. |
| | BAE | Protection of fins. |
| | BXT | Blygold Polual XT coil protection. |
| | | **Other options** |
| | | Please contact us for details. |

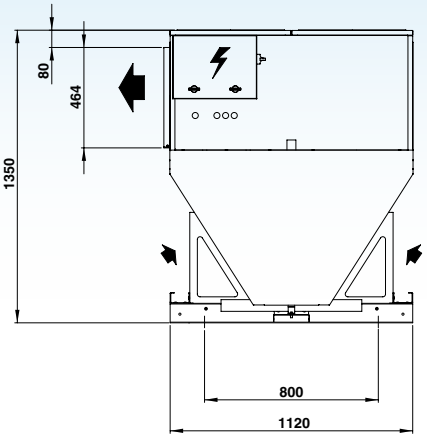


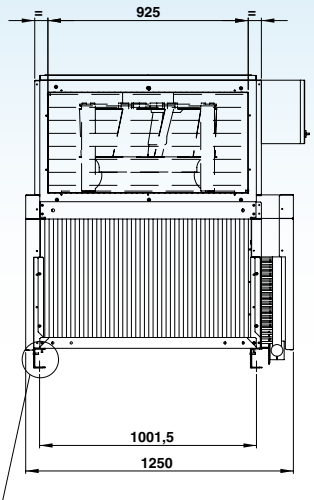


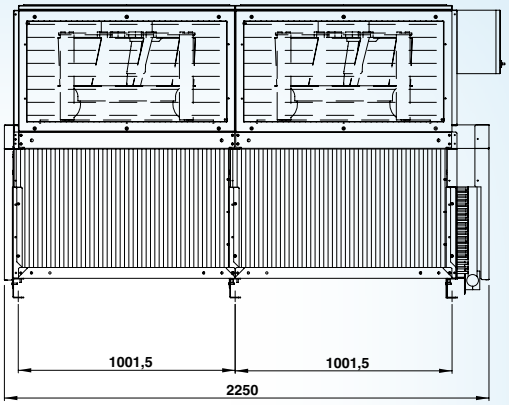


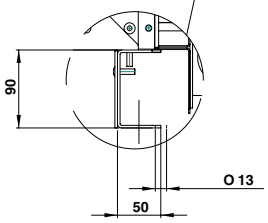


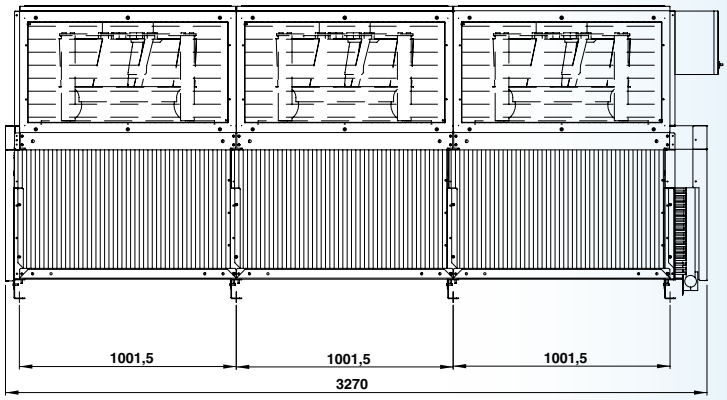


## Air direction

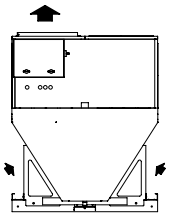

V1

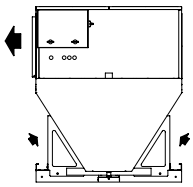

V2

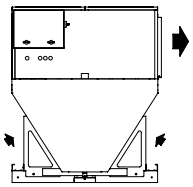

V3

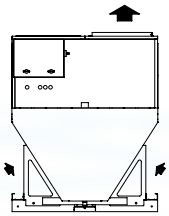

V4

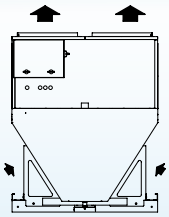

V1+V4

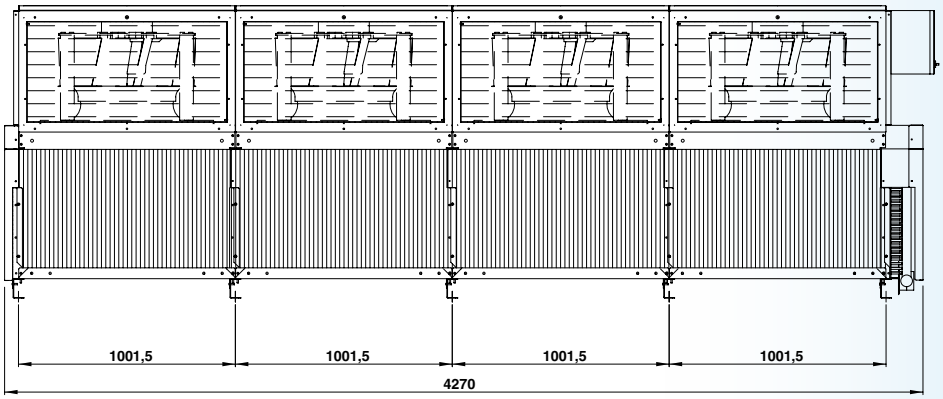


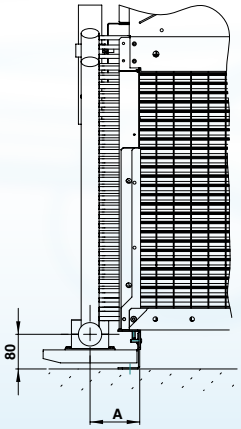


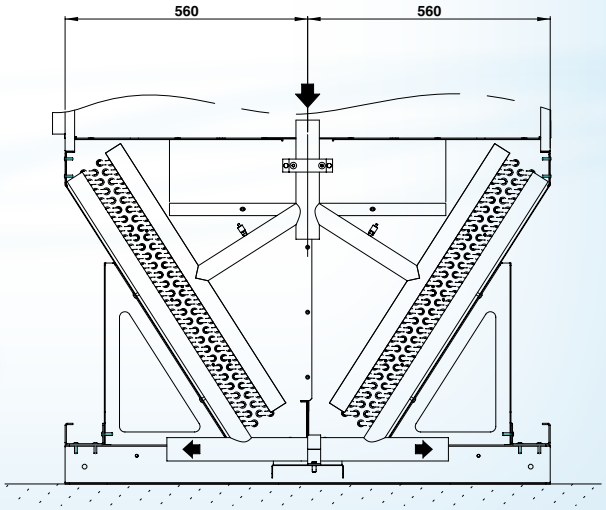

## CCV

**Technical characteristics give for full speed (1,200 rpm).**

| | | CCV ... | 1 | | | 2 | | | 3 | | | 4 | | |
|---|---|---|---|---|---|---|---|---|---|---|---|---|---|---|
| Air direction * | | | V1 / V4 | V1 + V4 | V2 / V3 | V1 / V4 | V1 + V4 | V2 / V3 | V1 / V4 | V1 + V4 | V2 / V3 | V1 / V4 | V1 + V4 | V2 / V3 |
| 0 Pa (1) DT1 = 15 K (2) R404A | Capacity | kW | **65,1** | **69,1** | **71,6** | **130,0** | **137,6** | **143,7** | **194,5** | **205,8** | **215,0** | **261,3** | **276,8** | **286,8** |
| | Input power | kW | 2,55 | 2,37 | 2,23 | 5,10 | 4,74 | 4,46 | 7,65 | 7,11 | 6,69 | 10,20 | 9,48 | 8,92 |
| | Air flow | $m^3/h$ | 13800 | 14850 | 15700 | 27600 | 29700 | 31400 | 41400 | 44550 | 47100 | 55200 | 59400 | 62800 |
| | Acoustic **Lp** (3) | dB(A) | 54 | 55 | 56 | 57 | 58 | 59 | 59 | 60 | 61 | 60 | 61 | 62 |
| | Acoustic **Lw** | dB(A) | 86 | 87 | 88 | 89 | 90 | 91 | 91 | 92 | 93 | 92 | 93 | 94 |
| 50 Pa (1) DT1 = 15 K (2) R404A | Capacity | kW | **64,2** | **68,0** | **70,6** | **128,1** | **135,5** | **140,5** | **191,7** | **202,8** | **212,0** | **257,4** | **270,0** | **282,7** |
| | Input power | kW | 2,59 | 2,43 | 2,29 | 5,18 | 4,86 | 4,58 | 7,77 | 7,29 | 6,87 | 10,36 | 9,72 | 9,16 |
| | Air flow | $m^3/h$ | 13500 | 14500 | 15350 | 27000 | 29000 | 30700 | 40500 | 43500 | 46050 | 54000 | 58000 | 61400 |
| | Acoustic **Lp** (3) | dB(A) | 53 | 55 | 56 | 56 | 58 | 59 | 58 | 60 | 61 | 59 | 61 | 62 |
| | Acoustic **Lw** | dB(A) | 85 | 87 | 88 | 88 | 90 | 91 | 90 | 92 | 93 | 91 | 93 | 94 |
| 100 Pa (1) DT1 = 15 K (2) R404A | Capacity | kW | **63,0** | **66,2** | **69,4** | **125,8** | **132,1** | **138,2** | **188,3** | **199,6** | **206,7** | **250,3** | **265,7** | **278,0** |
| | Input power | kW | 2,65 | 2,49 | 2,35 | 5,30 | 4,98 | 4,70 | 7,95 | 7,47 | 7,05 | 10,60 | 9,96 | 9,40 |
| | Air flow | $m^3/h$ | 13150 | 14150 | 14950 | 26300 | 28300 | 29900 | 39450 | 42450 | 44850 | 52600 | 56600 | 59800 |
| | Acoustic **Lp** (3) | dB(A) | 53 | 55 | 55 | 56 | 58 | 58 | 58 | 60 | 60 | 59 | 61 | 61 |
| | Acoustic **Lw** | dB(A) | 85 | 87 | 87 | 88 | 90 | 90 | 90 | 92 | 92 | 91 | 93 | 93 |
| 150 Pa (1) DT1 = 15 K (2) R404A | Capacity | kW | **61,2** | **65,4** | **68,1** | **122,2** | **130,6** | **135,8** | **185,0** | **195,4** | **203,2** | **245,7** | **262,6** | **270,6** |
| | Input power | kW | 2,71 | 2,53 | 2,42 | 5,42 | 5,06 | 4,84 | 8,13 | 7,59 | 7,26 | 10,84 | 10,12 | 9,68 |
| | Air flow | $m^3/h$ | 12800 | 13900 | 14550 | 25600 | 27800 | 29100 | 38400 | 41700 | 43650 | 51200 | 55600 | 58200 |
| | Acoustic **Lp** (3) | dB(A) | 52 | 54 | 55 | 55 | 57 | 58 | 57 | 59 | 60 | 58 | 60 | 61 |
| | Acoustic **Lw** | dB(A) | 84 | 86 | 87 | 87 | 89 | 90 | 89 | 91 | 92 | 90 | 92 | 93 |
| 200 Pa (1) DT1 = 15 K (2) R404A | Capacity | kW | **59,6** | **64,4** | **66,2** | **119,4** | **128,7** | **132,1** | **178,5** | **192,6** | **199,6** | **239,8** | **258,7** | **265,7** |
| | Input power | kW | 2,78 | 2,58 | 2,49 | 5,56 | 5,16 | 4,98 | 8,34 | 7,74 | 7,47 | 11,12 | 10,32 | 9,96 |
| | Air flow | $m^3/h$ | 12350 | 13600 | 14150 | 24700 | 27200 | 28300 | 37050 | 40800 | 42450 | 49400 | 54400 | 56600 |
| | Acoustic **Lp** (3) | dB(A) | 52 | 53 | 55 | 55 | 56 | 58 | 57 | 58 | 60 | 58 | 59 | 61 |
| | Acoustic **Lw** | dB(A) | 84 | 85 | 87 | 87 | 88 | 90 | 89 | 90 | 92 | 90 | 91 | 93 |

| | | CCV ... | 1 | | | 2 | | | 3 | | | 4 | | |
|---|---|---|---|---|---|---|---|---|---|---|---|---|---|---|
| Surface | | $m^2$ | 206 | 206 | 206 | 412 | 412 | 412 | 618 | 618 | 618 | 824 | 824 | 824 |
| Circuit volume | | $dm^3$ | 19,7 | 19,7 | 19,7 | 38,2 | 38,2 | 38,2 | 56,7 | 56,7 | 56,7 | 75,2 | 75,2 | 75,2 |
| Turbine | | Nb | 1 | 1 | 1 | 2 | 2 | 2 | 3 | 3 | 3 | 4 | 4 | 4 |
| | 380-480V 3/50-60 Hz | W max / u | 2900 | 2900 | 2900 | 2900 | 2900 | 2900 | 2900 | 2900 | 2900 | 2900 | 2900 | 2900 |
| | | A max / u | 4,6 | 4,6 | 4,6 | 4,6 | 4,6 | 4,6 | 4,6 | 4,6 | 4,6 | 4,6 | 4,6 | 4,6 |
| Net weight | | kg | 270 | 270 | 270 | 450 | 450 | 450 | 650 | 650 | 650 | 830 | 830 | 830 |
| Dimensions | **Width** | mm | 1120 | 1120 | 1120 | 1120 | 1120 | 1120 | 1120 | 1120 | 1120 | 1120 | 1120 | 1120 |
| | **Height** | mm | 1350 | 1350 | 1350 | 1350 | 1350 | 1350 | 1350 | 1350 | 1350 | 1350 | 1350 | 1350 |
| | **Length** | mm | 1250 | 1250 | 1250 | 2250 | 2250 | 2250 | 3270 | 3270 | 3270 | 4270 | 4270 | 4270 |
| | **A** | mm | 104 | 104 | 104 | 108 | 108 | 108 | 111 | 111 | 111 | 117 | 117 | 117 |
| Connections | Inlet | Ø | 1 1/8" | 1 1/8" | 1 1/8" | 1 3/8" | 1 3/8" | 1 3/8" | 1 5/8" | 1 5/8" | 1 5/8" | 2 1/8" | 2 1/8" | 2 1/8" |
| | Outlet | Ø | 1 1/8" | 1 1/8" | 1 1/8" | 1 3/8" | 1 3/8" | 1 3/8" | 1 5/8" | 1 5/8" | 1 5/8" | 2 1/8" | 2 1/8" | 2 1/8" |

*(1) Additional pressure available in Pascals.*
*(2) DT1 = difference between the ambient air temperature and the condensation temperature considered equal at an equivalent condenser inlet pressure.*
*(3) Sound pressure level in dB(A) measured at 10 m, line of sight, on a reflective parallelepiped measurement surface, given for information only.*

## Noise level given for various rotation speeds, for information only (for 0 Pa).

| | | CCV ... | 1 | | | 2 | | | 3 | | | 4 | | |
|---|---|---|---|---|---|---|---|---|---|---|---|---|---|---|
| Air direction * | | | V1 / V4 | V1 + V4 | V2 / V3 | V1 / V4 | V1 + V4 | V2 / V3 | V1 / V4 | V1 + V4 | V2 / V3 | V1 / V4 | V1 + V4 | V2 / V3 |
| Acoustic (3) | | Lp à 10 m | dB(A) | dB(A) | dB(A) | dB(A) | dB(A) | dB(A) | dB(A) | dB(A) | dB(A) | dB(A) | dB(A) | dB(A) |
| Rotation speed | **100 %** | 1200 rpm | 54 | 55 | 56 | 57 | 58 | 59 | 59 | 60 | 61 | 60 | 61 | 62 |
| | **75 %** | 900 rpm | 47 | 48 | 49 | 50 | 51 | 52 | 52 | 53 | 54 | 53 | 54 | 55 |
| | **50 %** | 600 rpm | 37 | 38 | 39 | 40 | 41 | 42 | 42 | 43 | 44 | 43 | 44 | 45 |

| PEI | IPH | ECB | VPS | CSC | PT1 | MCI | BAE | BXT |
|---|---|---|---|---|---|---|---|---|
| O | O | O | O | O | O | O | O | O |

HEATCRAFT™
Worldwide Refrigeration

EUROVENT CERTIFIED PERFORMANCE
www.eurovent-certification.com

E Solutions
Efficiency • Environment

# Axial fan dry cooler

## FC / FI NEOSTAR range

**FC NEOSTAR "City":**
Compactness and high efficiency.

**FI NEOSTAR "Industry":**
Low pressure drop and high capacity.
Wide range up to 1,200 kW, optimized head loss.

**Main applications:**
air conditioning, free cooling, co-generation,
power plants, process, industry ... and cooling all kinds
of fluids compatible with copper,
with a maximum inlet temperature of 100°C.

*Energy efficiency*
*Low noise level*
*Natural refrigerants*

20 ▁▂▃▄▅ 1200 kW

FRIGA-BOHN

HYFRA® PEDIA

HK® REFRIGERATION

Heatcraft reserves itself the right to make changes at any time without preliminary notice - Photos non-contractual

# Description

## Casing

• The casing is made of galvanized, as well as pre-painted, galvanized sheet steel RAL 9002.
• The use of stainless steel screws guarantees excellent, long-lasting corrosion resistance (standard ISO 7253) and aesthetic quality.
• All components used have successfully passed the salt mist corrosion and Kesternich tests.
• The units are delivered screwed to a wooden base.
• Full crate packaging in option.

## Ventilation

• The FC/FI NEOSTAR range is equipped with 2 speed external rotor fans units (star or delta coupling) - Class F.
• The FCH/FIH NEOSTAR range is equipped with 2 speed external rotor fans units (star or delta coupling) - Class H.
• These motors are of the type 400V/3/50Hz, sealed, IP54, compliant with standard EN 60529 and permanently lubricated.
• The motor fan units are wired as standard and factory connected as follows:
- 1 to 3 electrical boxes for the models L (motors connected in series),
- 2 to 8 electrical boxes for the models P (motors connected in parallel).
• **We are also able to deliver the units unwired upon request (option SCU).**
• Fan guards are compliant with safety standards.
• EC type of motor fan units (MEC) is also optional available and enables optimised operation of your installation.
• Fans units with special voltage ratings (FC/FI NEOSTAR):
- **M60**: Fan motor 400 V/3/60Hz, IP54, class F, in version 06P Ø 910 mm
- **M26**: Fan motor 230 V/3/60Hz, IP54, class F, in version 06P Ø 910 mm
- **M25**: Fan motor 230 V/3/50Hz, IP54, class F, in version 06P and 12P Ø 800 mm

## Coil

• The dry coolers are equipped with coils with the following characteristics :
- Copper tubes in a staggered arrangement and corrugated aluminium fins for optimum heat transfer.
- Headers with air vents and drain plugs.
- Connections : steel pipe, flanges.
• In option: Vinyl protection (**BAE**) or Blygold Polual XT protection (**BXT**) offering greater corrosion resistance when used in aggressive atmospheres.

## Generalities

• The freezing point of the fluid must be at least 5K below the minimum winter ambient temperature of the site of installation.

## Freezing risk

• A standard dry cooler cannot be fully drained simply by opening the drain fitting orifices.
• Always run the piping leak tests using the selected fluid.
• For an application with water (without anti-frost), and if the ambient temperature may drop below 0°C, the dry cooler must be suitably designed to allow complete draining of the unit (option **VID**).

## Recommendations

• According to the professional regulations concerning :
- Vents and drains
- Surge tanks (**VEX** option)
- Flexible connexions
- Vibration protection
- Correct percentage of glycol
- Fan motor protection
• Water treatment

# Options

| Kit | Factory | |
|---|---|---|
| | | **Ventilation** |
| | **M60** | Fans 400 V/3/60Hz (please contact us for details). |
| | **M25** | Fans 230 V/3/50Hz (please contact us for details). |
| | **M26** | Fans 230 V/3/60Hz (please contact us for details). |
| | **MTH** | Motors equipped with a protection thermostat. Recommended with frequent start sequences (more than 30 start sequences per hour) or when a speed controller is used. |
| | **IRP** | Rotary proximity switch(es). |
| | **C2V** | 2-speed factory wired in the switching box. |
| | **SCU** | Sans câblage usine (specify when ordering). |
| | | **Coil** |
| | **VEX** | Surge tank (see photo). |
| | **VID** | Total-draining special circuits. |
| | **BAE** | Vinyl protection of fins. |
| | **BXT** | Blygold Polual XT protection of fins. |
| | | **Casing** |
| | **RAL** | Special colours. |
| | **REH** | Legs extended by 240 mm (legs = 800 mm) |
| **RE2** | | Legs extended by 840 mm (legs = 1,400 mm) |
| **RE3** | | Legs extended by 1,340 mm (legs = 1,900 mm) |
| **RE4** | | Legs extended by 1,840 mm (legs = 2,400 mm) |
| | **ECB** | Full crate packaging. |
| | | **Protection and control enclosure** |
| | **MEC** | Condensation pressure control with speed variation using an electronic switching motor (EC). |
| | **CMP** | Motor protection cabinet. |
| | **RT1** | CMP + condensation pressure control with cascade stoppage of fans. |
| | **RT2** | CMP + condensation pressure control with speed variation (voltage). |
| | **RT3** | CMP + condensation pressure control with speed variation (frequency). |
| **MSK** | | Floor mounting kit. |
| | | **Other options** |
| | | Please contact us for details. |

# FC / FI NEOSTAR - Axial fan dry cooler

## Advantages

### Selection

As the performance of a dry cooler varies a lot with each working condition, it is not possible to present a selection method in this document.
Only the selection software, at your disposal on simple request, will allow you to select the dry cooler which suits the best your needs.
In case of emergency, do not hesitate to consult us in specifying :
capacity, maximum day/night noise level, type of fluid, ambient temperature, fluid inlet temperature, fluid outlet temperature (or flow), maximum allowed pressure drop, other external constraints.

### Installation

Simple and cheap installation (steel pipes).

### Servicing / Maintenance

Reduced maintenance due to direct driven fans.

Low maintenance costs.

### Dry coolers advantages

Replace advantageously cooling towers :
- no air and water bacteria contamination
- no water consumption
- no steam production
- flexible use in winter time
- easy control of fluid temperature in winter time

An optimised solution (noise level, energy consumption, size, type of temperature control...) due to multiple selection possibilities.

## Designation

**FI**(1)**H**(2) **PU**(3) **06**(4)**D**(5)

**L**(6)**04**(7) **D5**(8)

(1) **FC** = Dry cooler "City" - **FI** = Dry cooler "Industry"
(2) **H** = Class H motor (for **PU** and **SN** version only).
(3) **PN** = Power Normal - **PE** = Power Extra - **PU** = Power Ultra
**SN** = Silence Normal - **SE** = Silence Extra - **SU** = Silence Ultra
(4) Number of poles
(5) **D** = delta coupling - **Y** = star coupling
(6) Fan arrangement :
**L** : fans in line - **P** : fans in parallel
(7) Number of fans
(8) Type of module

## Certifications

| FC / FI NEOSTAR | | POWER | | | | SILENCE | | | |
|---|---|---|---|---|---|---|---|---|---|
| | | PN | PE | PU | FCH PU FIH PU | SN | SE | SU | FCH SN FIH SN |
| Air temperature | | < 70°C | < 70°C | < 60°C | < 80°C | < 70°C | < 80°C | < 80°C | < 80°C |
| Diameter | | Ø 800 | Ø 800 | Ø 910 | Ø 900 | Ø 800 | Ø 800 | Ø 800 | Ø 900 |
| Poles | | 06P | 06P | 06P | 06P | 08P | 12P | 16P | 08P |
| Specifications | | 400V/3/50Hz | 400V/3/50Hz | 400V/3/50Hz | 400V/3/50Hz | 400V/3/50Hz | 400V/3/50Hz | 400V/3/50Hz | 400V/3/50Hz |
| Class | | F class | F class* | F class | H class | F class | F class | F class | H class |
| Delta (**Δ**) | **rpm** | 880 | 910 | 885 | 910 | 660 | 435 | 360 | 687 |
| | **W** max. | 1940 | 2650 | 2650 | 2600 | 990 | 360 | 235 | 1230 |
| | **A** max. | 3,90 | 6,00 | 6,00 | 5,50 | 2,37 | 1,12 | 0,65 | 3,00 |
| | **dB(A)** | 80 | 85 | 88 | 84 | 72 | 64 | 60 | 78 |
| Star (**Y**) | **rpm** | 670 | 730 | 685 | 738 | 485 | 340 | 255 | 540 |
| | **W** max. | 1210 | 1650 | 1650 | 1800 | 580 | 200 | 105 | 850 |
| | **A** max. | 2,23 | 3,10 | 3,10 | 3,00 | 1,21 | 0,47 | 0,25 | 1,60 |
| | **dB(A)** | 75 | 79 | 80 | 79 | 67 | 58 | 51 | 70 |

** heavy-duty motor*

HEATCRAFT™
Worldwide Refrigeration

# Axial fan dry cooler

## AEV range

EUROVENT CERTIFIED PERFORMANCE
www.eurovent-certification.com

E Solutions
Efficiency • Environment

### Main applications:

co-generation, power plants, process, industry, air conditioning, free cooling ... and cooling all kinds of fluids compatible with copper.

- Low space requirements, reduced footprint.
- High capacity of up to 1,400 kW.
- Low power consumption, 1 to 3 fans only.
- Motors capable of operating at high outdoor temperatures of up to 60°C.
- Extremely low noise level, reduced rotation speeds.

**Adapted to high-temperature reheated air**

*Low noise level*
*Natural refrigerants*

150 ... 1400 kW

FRIGA-BOHN

HYFRA® PEDIA

HK® REFRIGERATION

Heatcraft reserves itself the right to make changes at any time without preliminary notice - Photos non-contractual

# **AEV** - Axial fan dry cooler

## Description

### Casing

• Hot dip galvanized steel frame, casing in galvanized sheet steel RAL 9002.

### Ventilation

• The fan assemblies are equipped with Ø1840mm fans with a special blade design, offering a high efficiency and extremely low noise level.
• The blades in synthetic material are highly corrosion and wear resistant.
• The air outlet temperature may be high, the motors being out of the air flux due to the pulleys and belts transmission.
• Asynchronous motors, long life lubricated, three phase, 400V/50Hz, classF, conform to the CEI34-1 norm.
• Fan guards are compliant with safety standards.

### Coil

• The dry coolers are equipped with coils with the following characteristics :
- Copper tubes in a staggered arrangement and corrugated aluminium fins for optimum heat transfer.
- Headers with air vents and drain plugs.
- Connections : steel pipe up to DN50, flanges for larger sizes.

### Freezing risk

• A standard dry cooler cannot be fully drained simply by opening the drain fitting orifices.
• Always run the piping leak tests using the selected fluid.
• For an application with plain water, and when the ambient temperature may drop below 0°C, a special coil design is required. Please consult us.

## Certifications

## Advantages

### Selection

As the performance of a dry cooler varies a lot with each working condition, it is not possible to present a selection method in this document.
Only the selection software, at your disposal on simple request, will allow you to select the dry cooler which suits the best your needs.
In case of emergency, do not hesitate to consult us in specifying: capacity, maximum day/night noise level, type of fluid, ambient temperature, fluid inlet temperature, fluid outlet temperature (or flow), maximum allowed pressure drop, other external constraints.

### Installation

Simple and cheap installation (steel pipes)

Limited floor space.

Recommendations:
• According to the professional regulations concerning :
- Vents and drains
- Surge tanks (**VEX** option)
- Flexible connexions
- Vibration protection
- Correct percentage of glycol
- Fan motor protection
• Water treatment

The freezing point of the fluid must be at least 5K below the minimum winter ambient temperature of the site of installation.

### Servicing / Maintenance

Reduced maintenance.

Low maintenance costs.

### Dry coolers advantages

Replace advantageously cooling towers :
- no air and water bacteria contamination
- no water consumption
- no steam production
- flexible use in winter time
- easy control of fluid temperature in winter time

An optimised solution (noise level, energy consumption, size, type of temperature control...) due to multiple selection possibilities.

## Options

| Kit | Factory | |
|---|---|---|
| | | **Coil** |
| | **VEX** | Surge tank. |
| | **VID** | Total-draining special circuits. |
| | **BAE** | Vinyl protection of fins. |
| | **BXT** | Blygold Polual XT protection of fins. |
| | | **Protection and control enclosure** |
| | **CMP** | Motor protection cabinet. |
| | **RT3** | CMP + condensation pressure control with speed variation (frequency). |
| | | **Other options** |
| | | Please contact us for details. |

HEATCRAFT
Worldwide Refrigeration

# Compressorized products

## Refrigeration monoblock units
**EUROMON**

## Condensing units and split-systems
**CLIMACAVE - MINI - MINIPLUS**
**VANGUARD - SPLIT VANGUARD**
**MAXI - MAXICLIMA**

## Encased outdoor condensing units
- Single-compressor
  **MEGA - MONOHAVANE**
- Multi-compressors
  **MULTIHAVANE**

## Compressor racks
**eCO2Gen - COMPACT**
**MOPSH / MOSC - MOVSH**

## Other racks
**ENCASED - DUPLEX - BOOSTER - MONOSH ...**

## Chillers
- Glycol water production rack
  **PEG - ECOLEAN - NEOSYS**

Heatcraft reserves itself the right to make changes at any time without preliminary notice - Photos non-contractual

FRIGA-BOHN
HYFRA® PEDIA
HK® REFRIGERATION

# Compressorized products - Capacities

## Chill range

### Refrigeration monoblock units — $t_i$ = 0°C / +32°C

### Split systems — $t_i$ = 0°C / +32°C

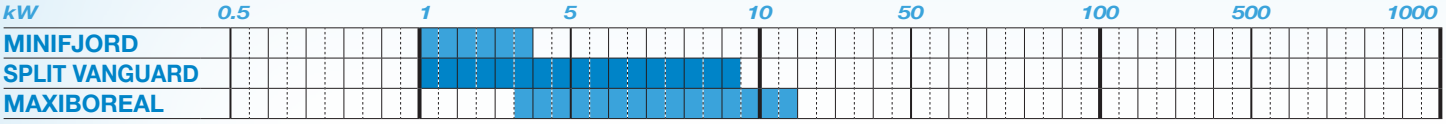


### Condensing units — -10°C / +32°C

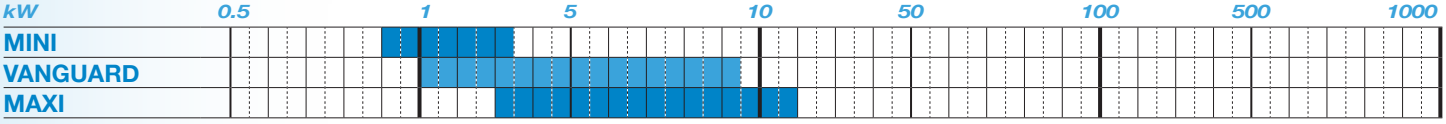


### Encased outdoor condensing units — -10°C / +32°C

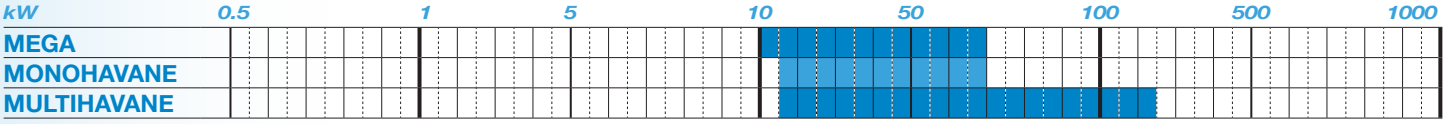


### Compressor racks — -10°C / +45°C

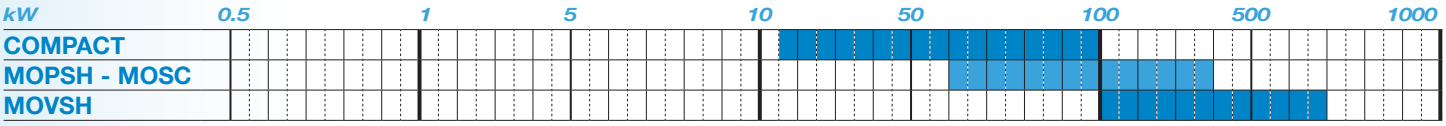


### Glycol water production racks — -4°C I -8°C / +45°C

## Low temperature range

### Refrigeration monoblock units — $t_i$ = -20°C / +32°C

### Split systems — $t_i$ = -20°C / +32°C

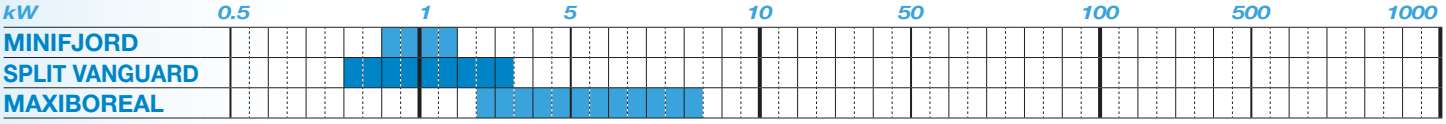


### Condensing units — -35°C / +32°C

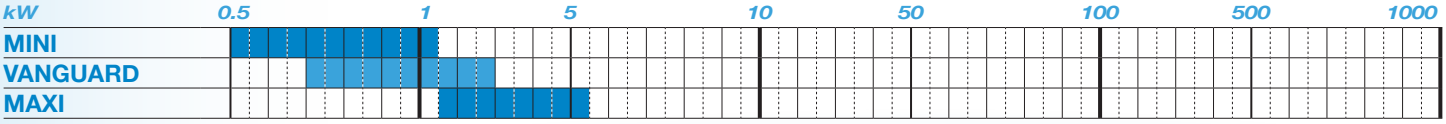


### Encased outdoor condensing units — -35°C / +32°C

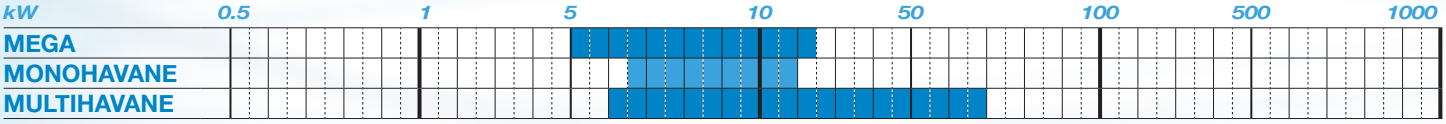


### Compressor racks — -35°C / +40°C

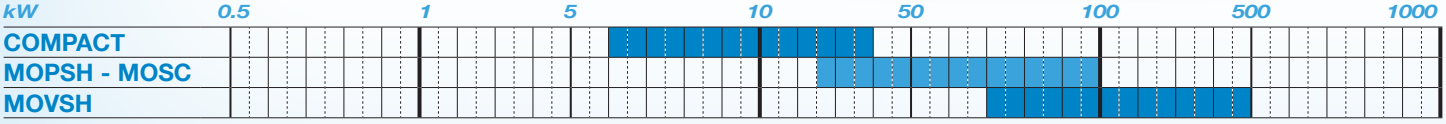


### $CO_2$ compressor racks — -35°C / -5°C

HEATCRAFT
Worldwide Refrigeration

# Refrigeration monoblock unit

## EUROMON range

- Complete "turnkey" monoblock unit designed for use in small cold rooms from 3 to 50 m3.
- Mounted across the cold room panel; extremely compact unit cooler for optimum use of space in the cold room.
- Fast, easy and safe installation.
- Products assembled, tested and factory-preset according to the application.

0.7 4.5 kW

Heatcraft reserves itself the right to make changes at any time without preliminary notice - Photos non-contractual

FRIGA-BOHN
HYFRA PEDIA
HK REFRIGERATION

## Market segments

*FFS* *Cafés – Hotels - Restaurants – Corner shops – Mini-markets*

## Description

The genuine technical advantages offered by this new EUROMON monoblock generation earn it a place as leader in its market.

### Fast installation

- The installation method for this unit is extremely simple. Simply slot the monoblock unit into the notches in the top panel of the cold room and secure it. Once in place, the unit is ready for use as soon as it is plugged into an electrical power point.
- Furthermore, the various control parameters are all factory-preset according to the application.

### Total accessibility

- The front cover is designed in two parts rendering access to condensing unit components, in particular the compressor, condenser fans and re-evaporation heater, easier.
- The controller is equipped with a plug-in terminal rail for easy maintenance.

### Energy saving

- The unit cooler electric defrost mode is approximately three times more economical than the hot gas defrost in terms of power consumption.
- Furthermore, it is independent of compressor operation which extends the operating life of this element.

### Evaporation of condensation

- An electric immersion heater is used for this function which, contrary to the discharge gas solution, does not require the compressor and protects the piping against corrosion.
- Power consumption is minimized thanks to the self-adapting property of the heater.

### Optimum use of room space

- The “ceiling unit” design form of the unit cooler not only guarantees better air distribution, but also provides more storage space for products in the cold room.

## Designation

**EUMOP**(1) **21A**(2) **D**(3)

(1) **EUMOP** = Chill range
**EUMON** = Low temperature range
(2) Model
(3) Electric defrost

## Certifications

## EUMOP

**Chill range**

| Room temperature +4 °C - Outside temperature +32 °C | | | | | | | | | |
|---|---|---|---|---|---|---|---|---|---|
| | | EUMOP | 3A | 5A | 7A | 10A | 13A | 21A | 25A |
| Capacity R404A (1) | | kW | 1,04 | 1,28 | 1,63 | 2,21 | 2,72 | 3,72 | 4,53 |
| Input power (1) | | kW | 0,62 | 0,72 | 0,97 | 1,10 | 1,35 | 1,53 | 1,90 |
| Compressor | | CV | 3/8 | 1/2 | 7/8 | 1 | 1 3/8 | 1,8 | 2,3 |
| Room volume (indication) | | $m^3$ | 4 | 7 | 11 | 17 | 23 | 29 | 46 |
| Max. input current | 230V/1/50Hz+T | A | 5,2 | 5,8 | 6,1 | 7,8 | 9,7 | - | - |
| | 400V/3+N/50Hz | A | - | - | - | - | - | 5,9 | 7,1 |
| Unit cooler air flow | | $m^3/h$ | 600 | 600 | 600 | 1160 | 1160 | 1700 | 2260 |

| Room temperature 0 °C - Outside temperature +32 °C - D = Electric defrost | | | | | | | | | |
|---|---|---|---|---|---|---|---|---|---|
| | | EUMOP | 3AD | 5AD | 7AD | 10AD | 13AD | 21AD | 25AD |
| Capacity R404A (1) | | kW | 0,93 | 1,17 | 1,47 | 1,98 | 2,44 | 3,30 | 4,03 |
| Input power (1) | | kW | 0,59 | 0,69 | 0,92 | 1,05 | 1,28 | 1,42 | 1,79 |
| Compressor | | CV | 3/8 | 1/2 | 7/8 | 1 | 1 3/8 | 1,8 | 2,3 |
| Room volume (indication) | | $m^3$ | 3 | 5 | 8 | 12 | 17 | 20 | 26 |
| Max. input current | 230V/1/50Hz+T | A | 5,2 | 5,8 | 6,1 | 7,8 | 9,7 | - | - |
| | 400V/3+N/50Hz | A | - | - | - | - | - | 5,9 | 7,1 |
| Unit cooler air flow | | $m^3/h$ | 600 | 600 | 600 | 1160 | 1160 | 1700 | 2260 |

| | | EUMOP | 3A/AD | 5A/AD | 7A/AD | 10A/AD | 13A/AD | 21A/AD | 25A/AD |
|---|---|---|---|---|---|---|---|---|---|
| Dimensions | H | mm | 649 | 649 | 649 | 649 | 649 | 836 | 836 |
| | H' | mm | 278 | 278 | 278 | 278 | 278 | 462 | 462 |
| | P | mm | 320 | 320 | 320 | 320 | 320 | 472 | 472 |
| | P' | mm | 506 | 506 | 506 | 506 | 506 | 691 | 691 |
| | L | mm | 399 | 399 | 399 | 689 | 689 | 575 | 841 |
| | A | mm | 90 | 90 | 90 | 90 | 90 | 89 | 89 |
| | B | mm | 38 | 38 | 38 | 38 | 38 | 81 | 81 |
| | C | mm | 319 | 319 | 319 | 609 | 609 | 414 | 680 |
| Net weight | | kg | 46 | 48 | 52 | 65 | 71 | 85 | 100 |

*(1) Cooling capacity with : 10K superheat - 3K subcooling*

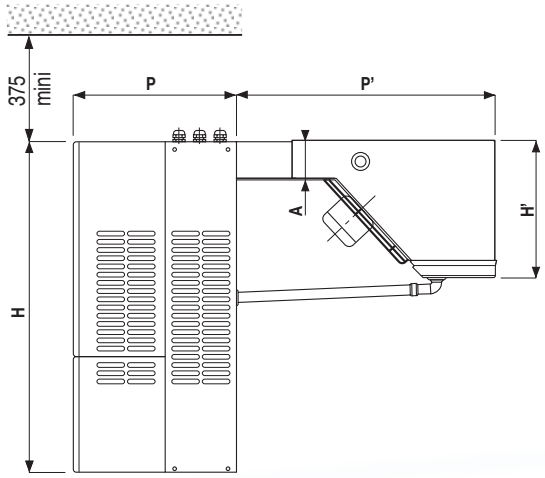


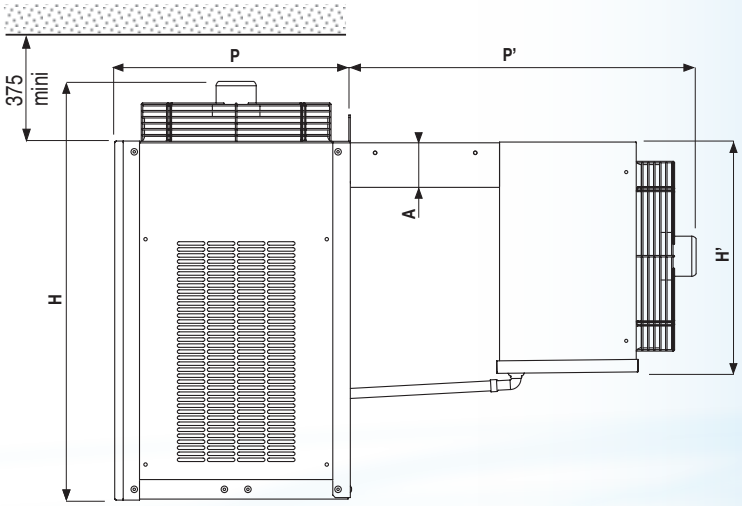


### EUMOP 3A - 5A - 7A - 10A - 13A

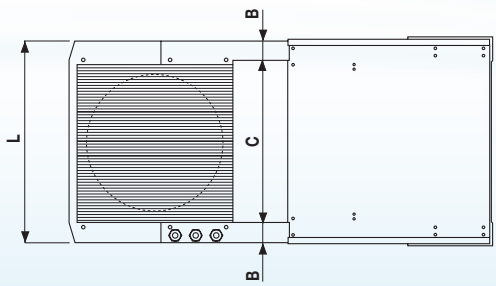


### EUMOP 21A - 25A

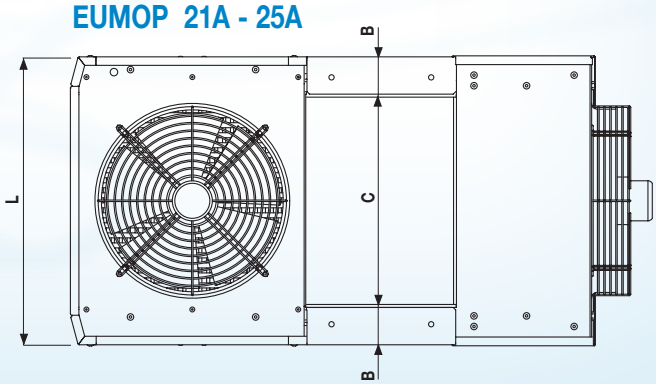

## EUMON

## Low temperature range

| Room temperature -20 °C - Outside temperature +32 °C | | | | | | | |
|---|---|---|---|---|---|---|---|
| | | EUMON | 8A | 14A | 20A | 26A | 36A |
| Capacity R404A (1) | | kW | 0,80 | 1,11 | 1,46 | 1,90 | 2,78 |
| Input power (1) | | kW | 0,75 | 0,91 | 1,19 | 1,46 | 2,47 |
| Compressor | | CV | 3/4 | 1 1/2 | 2 | 2,3 | 3,3 |
| Room volume (indication) | | $m^3$ | 5 | 9 | 15 | 27 | 54 |
| Max. input current | 230V/1/50Hz+T | A | 5,2 | 7,2 | 9,0 | - | - |
| | 400V/3+N/50Hz | A | - | - | - | 8,3 | 9,3 |
| Unit cooler air flow | | $m^3/h$ | 600 | 1160 | 1160 | 1750 | 2240 |

| Room temperature -25 °C - Outside temperature +32 °C | | | | | | | |
|---|---|---|---|---|---|---|---|
| | | EUMON | 8A | 14A | 20A | 26A | 36A |
| Capacity R404A (1) | | kW | 0,68 | 0,92 | 1,23 | 1,59 | 2,36 |
| Input power (1) | | kW | 0,69 | 0,83 | 1,09 | 1,30 | 2,23 |
| Compressor | | CV | 3/4 | 1 1/2 | 2 | 2,3 | 3,3 |
| Room volume (indication) | | m3 | 4 | 7 | 8,5 | 15 | 30 |
| Max. input current | 230V/1/50Hz+T | A | 5,2 | 7,2 | 9,0 | - | - |
| | 400V/3+N/50Hz | A | - | - | - | 8,3 | 9,3 |
| Unit cooler air flow | | $m^3/h$ | 600 | 1160 | 1160 | 1750 | 2240 |

| | | EUMON | 8A | 14A | 20A | 26A | 36A |
|---|---|---|---|---|---|---|---|
| Dimensions | H | mm | 649 | 649 | 649 | 836 | 836 |
| | H' | mm | 278 | 278 | 278 | 462 | 462 |
| | P | mm | 320 | 320 | 320 | 472 | 472 |
| | P' | mm | 506 | 506 | 506 | 691 | 691 |
| | L | mm | 399 | 689 | 689 | 575 | 841 |
| | A | mm | 90 | 90 | 90 | 89 | 89 |
| | B | mm | 38 | 38 | 38 | 81 | 81 |
| | C | mm | 319 | 609 | 609 | 414 | 680 |
| Net weight | | kg | 57 | 71 | 80 | 85 | 110 |

*(1) Cooling capacity with : 10K superheat - 3K subcooling*

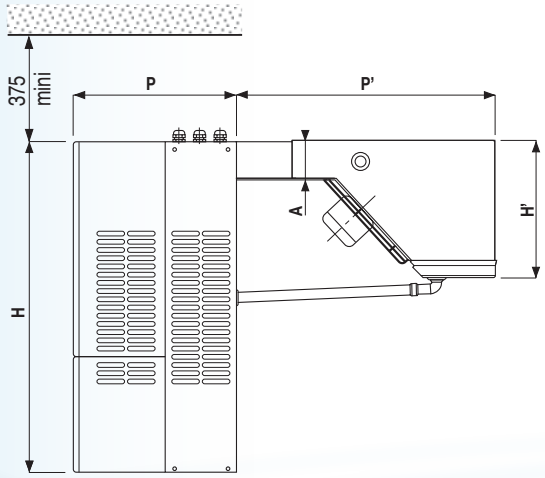


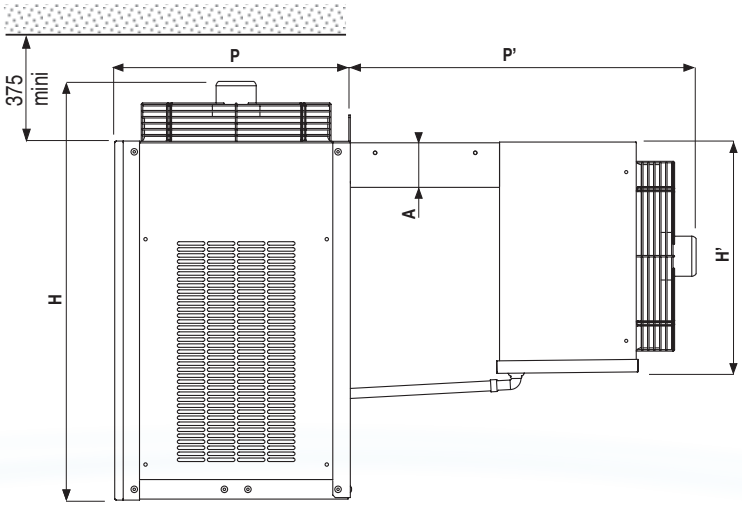


### EUMON 8A - 14A - 20A

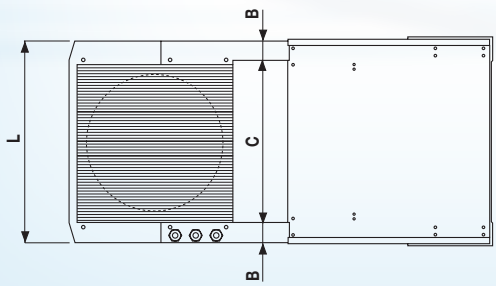


### EUMON 26A - 36A

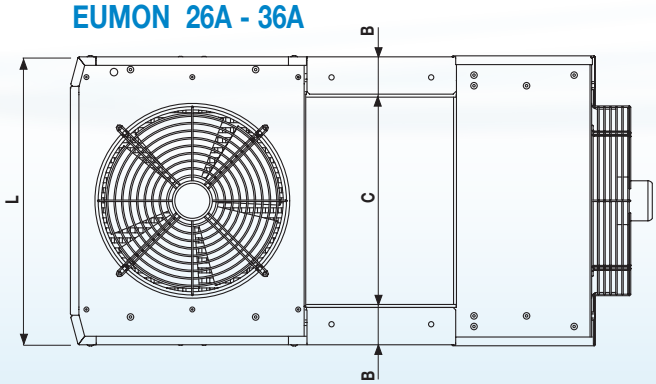

HEATCRAFT™
Worldwide Refrigeration

# Split system for wine cellar

## CLIMACAVE range

- Ready-to-install refrigeration Split Systems suitable for wine cellar air conditioning: conservation at +12°C.
- Low-depth, ceiling-mounted unit cooler designed to control cellar hygrometry.

0.9 – 3 kW

Heatcraft reserves itself the right to make changes at any time without preliminary notice - Photos non-contractual

FRIGA-BOHN

HYFRA® PEDIA

HK® REFRIGERATION

## Market segments

*FFS Cafés - Hotels - Restaurants - Corner shops*

## CLIMACAVE

$t_i$ = +12°C - DT1 = 12K

| Split system | +32°C | MIV ... | 3 A | 5 A | 10 A | 13 A |
|---|---|---|---|---|---|---|
| Capacity R404A (1) | | kW | 1,30 | 1,50 | 2,37 | 3,56 |
| Input power (1) | | kW | 0,79 | 0,92 | 1,43 | 1,81 |

| Condensing unit | | | | | | |
|---|---|---|---|---|---|---|
| Compressor | | CV | 3/8 | 1/2 | 1 | 2.3 |
| Voltage | | 50Hz | 230V/1+T | 230V/1+T | 230V/1+T | 230V/1+T |
| Air flow | | $m^3/h$ | 700 | 700 | 850 | 2500 |
| Input power | | W max. | 550 | 770 | 1290 | 1590 |
| Input current | | A max. | 5,0 | 5,6 | 6,8 | 9,0 |
| Dimensions | L | mm | 790 | 790 | 790 | 790 |
| | P | mm | 352 | 352 | 352 | 460 |
| | H | mm | 370 | 370 | 370 | 570 |
| | D | mm | 600 | 600 | 600 | 750 |
| | F | mm | 200 | 200 | 200 | 350 |
| Suction | | Ø | 3/8" | 3/8" | 1/2" | 1/2" |
| Liquid | | Ø | 1/4" | 1/4" | 1/4" | 1/4" |
| Net weight | | kg | 43 | 45 | 55 | 60 |

| Unit cooler | | | | | | |
|---|---|---|---|---|---|---|
| Nb x Ø | | mm | 2 x 200 | 2 x 200 | 3 x 200 | 4 x 200 |
| Air flow | | $m^3/h$ | 580 | 580 | 870 | 1160 |
| Input power | | W max. | 76 | 76 | 114 | 152 |
| Input current | | A max. | 0.48 | 0.48 | 0.72 | 0.96 |
| Dimensions | A | mm | 784 | 784 | 1174 | 1504 |
| | B | mm | 596 | 596 | - | - |
| | C | mm | - | - | 493 | 658 |
| | H | mm | 227 | 227 | 227 | 209 |
| | G | Ø | Ø 32 | Ø 32 | Ø 32 | 1" G |
| Net weight | | | 9.5 | 9.5 | 15.0 | 20.0 |

*(1) 10K superheating - 3K subcooling*

## Condensing unit dimensions

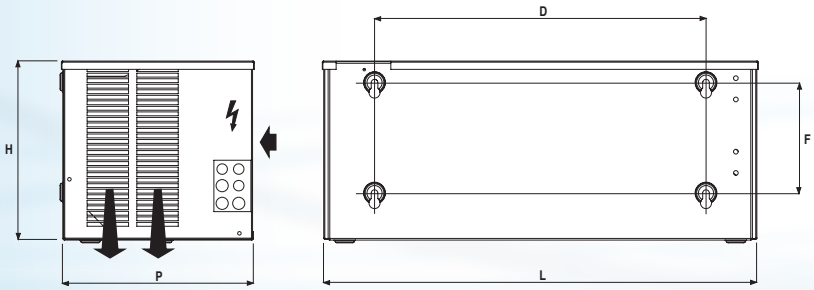


## Unit cooler dimensions

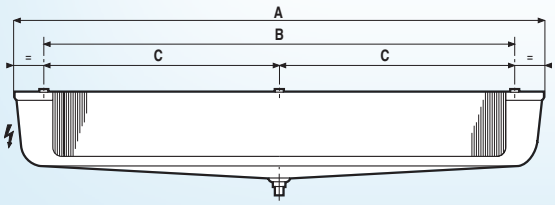


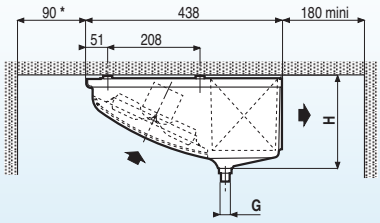


## Description

### Condensing unit

#### Casing

- Frame and casing made of pre-painted, sheet metal for outdoor floor or wall-mounted installation.

#### Condenser

- Copper/aluminium condenser coil with fan 230V/1 or 400V/3 – 1,500 rpm.

#### Switching cabinet

- Sealed IP 53 switching cabinet comprising: 1 switchboard to standard CEI 439-1 and APAVE approved, passage of electrical connections via packing glands, enclosure pre-wired with unit and unit cooler protection devices.

#### Other equipment

- Liquid line with dryer with accumulator and hygroscopic indicator.
- Operating valve with pressure tapping point (inlet/outlet on unit).
- Pre-filled with R404A.

### Unit cooler

- Thick, recyclable ABS casing.
- Copper/aluminium coil, fins spaced at 4.23 mm and grooved tubes.
- Pre-fitted wide range expansion valve.
- Pre-filled with nitrogen.
- Wine cellar application with conservation at +12°C and controlled hygrometry.

### Control

- Electronic control.
- Lighting control.
- Display and signalling of alarms.
- An additional programmable contact (door opening, trapped person safety...).

## Options

### Miscellaneous

**KHE** Magnetic port-hole lighting kit with door switch (not fitted).

## Certifications

## Advantages

| Installation / Servicing / Maintenance |
|---|
| Ready-to-install units (operating valve, dryer, indicators, casing…) with user-friendly design offering easy access to components. |
| Compact and sturdy equipment for easy handling and installation in confined spaces. |
| Switching enclosure factory pre-wired and tested. |
| Unit cooler made of ASB with hinge-mounted casing, access to all internal components (coil, fan…) rendering setting and cleaning work easier. |

## Control unit dimensions

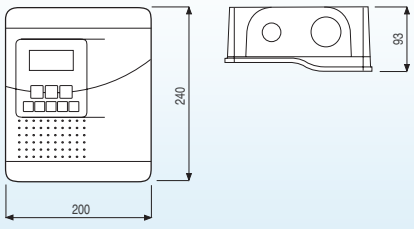

HEATCRAFT™
Worldwide Refrigeration

# Condensing unit and Split system

## MINI range

- This encased air condensing unit comprises 9 models:
  - 6 to meet chill application requirements.
  - 3 to meet low temperature application requirements.

## MINIFJORD range

- The “ready-to-install” Split System model is proposed with various unit cooler types according to application requirements:
  - ceiling units (MF and MR),
  - and cubic units (MUC-LUC).
- Cold rooms from 3 to 70 $m^3$.

0.6 4.7 kW

Heatcraft reserves itself the right to make changes at any time without preliminary notice - Photos non-contractual

FRIGA-BOHN
HYFRA® PEDIA
HK® REFRIGERATION

## Market segments

*FFS* *Cafés – Hotels - Restaurants – Corner shops – Mini-markets*

## Designation

**MIB(1) P(2) 5A(3)**
**MI(1)P(2) 3 A(3) / MF 3(4)**

(1) Condensing units / Split systems
(2) **P** = Chill range – **N** = Low temperature range
(3) Model
(4) Unit cooler

## Description

### Condensing unit

#### Casing

• Frame and casing made of pre-painted, sheet metal for outdoor floor or wall-mounted installation.

#### Compressor

• The MINI condensing unit is equipped with a hermetic compressor.

#### Condenser

• Copper/aluminium condenser coil with fan 230V/1 or 400V/3 – 1,500 rpm.

#### Switching cabinet

• Sealed IP 53 switching cabinet comprising: 1 switchboard to standard CEI 439-1 and APAVE approved, passage of electrical connections via packing glands.
• Cabinet wiring with unit and unit cooler protection devices.
• Isolator switch and solenoid valve as standard for models MIF P 25A and MIF N 26A (optional for other models).

#### Other equipment

• HP safety is provided with an automatic-reset cartridge pressure switched.
• Liquid line with dryer with accumulator and hygroscopic indicator.
• System pump-down with LP pressure switch and solenoid valve on MIF P 25A and MIF N 26A (optional for other models).
• Operating valve with pressure tapping point (inlet/outlet on unit).

### Split system model

• The unit is pre-filled with refrigerant R404A.

### Unit coolers

• Extremely thick, recyclable ABS casing (up to models MIF P 13A and N 14A).
• Other models made of white enamelled sheet steel.
• Copper/aluminium coil, fins spaced at 4.23 mm and grooved tubes.
• Pre-fitted wide range expansion valve.
• Defrost heater and sensor (S2), end of defrost for low temperature models.
• Pre-filled with nitrogen.

### Control

• Electronic control.
• Defrost control (air or electric).
• Lighting control.
• Display and signalling of alarms.
• An additional programmable contact (door opening, trapped person safety...).
• Forced operation incorporated for rapid cooling or deep-freezing.

| | | | |
|---|---|---|---|
| Application 1<br>Room temp. +4°C<br>DT1 = 6K | MF | MR | MUC |
| Application 2<br>Room temp. 0°C<br>DT1 = 8K | MF<br>+ defrost<br>E1K | MR<br>+ defrost<br>E1K | MUC<br>+ defrost<br>E1K |
| Application 3<br>Room temp. -18°C<br>DT1 = 8K | - | MRE | LUC |
| Application 4<br>Room temp. -25°C<br>DT1 = 6K | - | MRE | LUC |

## Certifications

## Advantages

| Installation / Servicing / Maintenance |
|---|
| "Turnkey" units (operating valve, dryer, indicators, casing…) with user-friendly design offering easy access to components. |
| Compact and sturdy equipment for easy handling and installation in confined spaces. |
| Switching box factory pre-wired and tested. |

## Options

| Kit | Factory | |
|---|---|---|
| | CAC | Additional casing strap. |
| | CEV | Water condenser + pressostatic valve for **MINI**. |
| RPC | | HP digital controller (not fitted). |
| | RPE | 2 litre receiver + LP pressure switch + solenoid valve (except P 25A - N 26A). 3 litre receiver (P 25A - N 26A only). |
| | SEC | Isolator switch. |
| KHE | | Magnetic port-hole lighting kit with door switch (not fitted). |
| KRE | | Drain line heater for **MINIFJORD** (not fitted). |
| | ECC | Crate packaging (for the condensing units). |

## Condensing unit dimensions

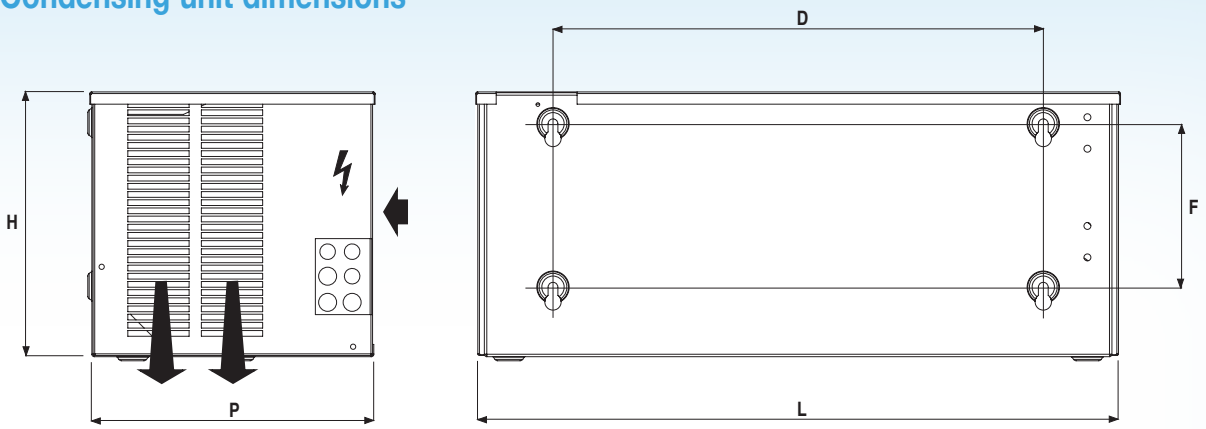


## Unit cooler dimensions

### MF 3 - MF 4

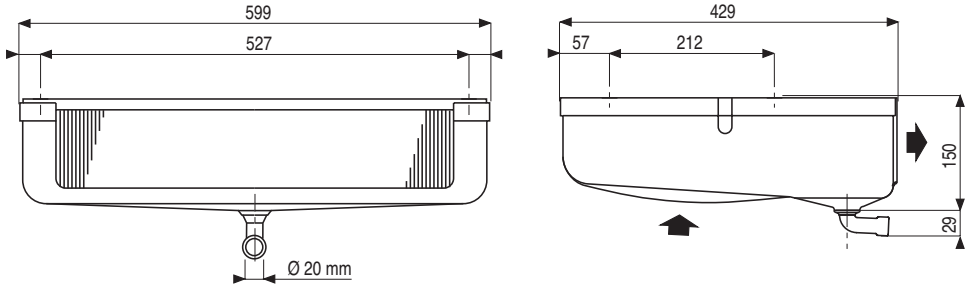


### MR 110* - MR 135* - MR 210**
### MRE 135* - MRE 210**

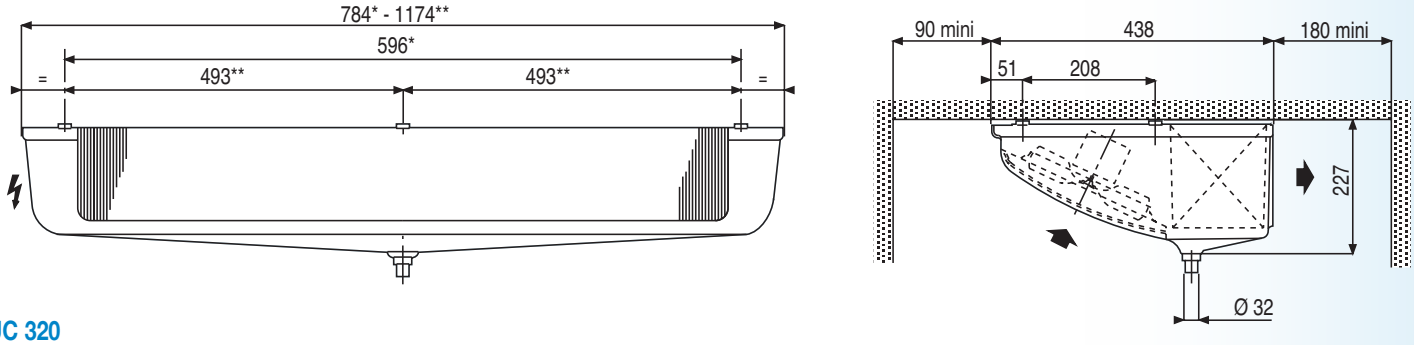


### MUC 320
### LUC 350

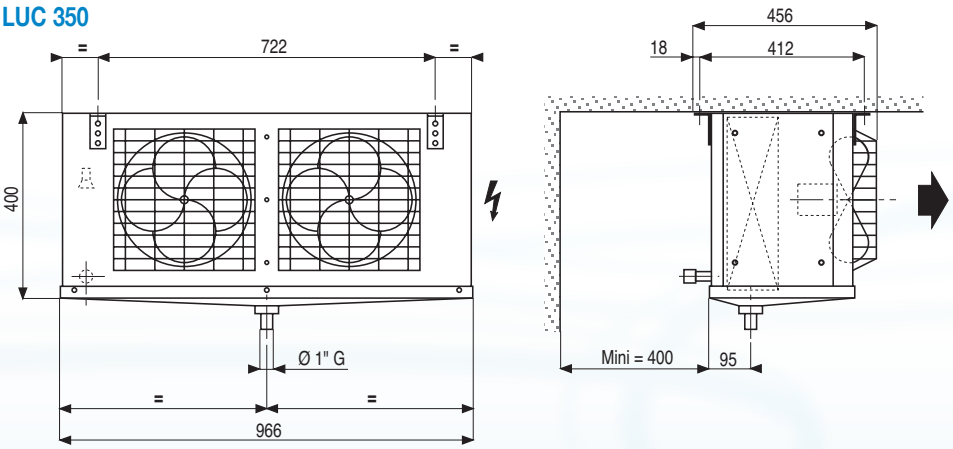


## Control unit dimensions

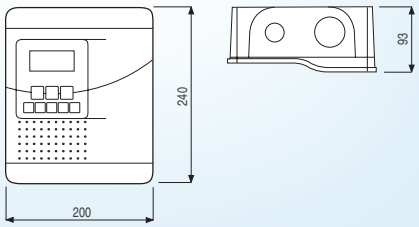

## MINI - Condensing unit

Chill range

| Condensing unit | | MIB ... | P 3A | P 5A | P 7A | P 10A | P 13A | P 25A |
|---|---|---|---|---|---|---|---|---|
| Capacity R404A (1) | | kW | **0,90** | **1,05** | **1,44** | **1,59** | **2,03** | **3,53** |
| Input power (1) | | kW | **0,62** | **0,73** | **1,01** | **1,11** | **1,37** | **2,06** |
| Compressor | | HP | 3/8 | 1/2 | 3/4 | 1 | 1 1/4 | 2.3 |
| Voltage | | 50Hz | 230V/1+T | 230V/1+T | 230V/1+T | 230V/1+T | 230V/1+T | 400V/3+N+T |
| Air flow | | $m^3/h$ | 350 | 350 | 700 | 700 | 850 | 2500 |
| Max. input current | | A | 5,0 | 5,6 | 6,0 | 6,8 | 8,7 | 5,7 |
| Dimensions | L | mm | 790 | 790 | 790 | 790 | 790 | 890 |
| | P | mm | 352 | 352 | 352 | 352 | 352 | 460 |
| | H | mm | 370 | 370 | 370 | 370 | 370 | 570 |
| | D | mm | 600 | 600 | 600 | 600 | 600 | 770 |
| | F | mm | 200 | 200 | 200 | 200 | 200 | 350 |
| Suction | | Ø | 3/8" | 3/8" | 1/2" | 1/2" | 1/2" | 5/8" |
| Liquid | | Ø | 1/4" | 1/4" | 1/4" | 1/4" | 1/4" | 3/8" |
| Net weight | | kg | 40 | 43 | 52 | 52 | 57 | 69 |

*(1) Refrigeration capacity with: Evaporation temperature -10°C - Ambient temperature +32°C -10 K superheating - 3K subcooling.*

## MINIFJORD - Split system

$t_i$ = +4°C - DT1 = 6K

| Split system | +32°C | MIP ... | 3 A MF 3 | 5 A MF 4 | 7 A MR 110 | 10 A MR 135 | 13 A MR 210 | 25 A MUC 320 |
|---|---|---|---|---|---|---|---|---|
| Capacity R404A (1) | | kW | **1,22** | **1,41** | **1,88** | **2,07** | **2,61** | **4,79** |
| Input power (1) | | kW | **0,77** | **0,90** | **1,25** | **1,38** | **1,74** | **2,70** |
| Room volume (2) | | $m^3$ | 3 | 6 | 9 | 14 | 22 | 35 |

| Condensing unit | MIB ... | P 3A | P 5A | P 7A | P 10A | P 13A | P 25A |
|---|---|---|---|---|---|---|---|
| Input power | W max. | 540 | 770 | 1090 | 1230 | 1580 | 2540 |
| Input current | A max. | 5,0 | 5,6 | 6,0 | 6,8 | 8,7 | 5,7 |

| Unit cooler | | MF 3 | MF 4 | MR 110 | MR 135 | MR 210 | MUC 320 |
|---|---|---|---|---|---|---|---|
| Nb x Ø | mm | 2 x 200 | 2 x 200 | 2 x 200 | 2 x 200 | 3 x 200 | 2 x 300 |
| Air flow | $m^3/h$ | 460 | 430 | 650 | 580 | 870 | 2076 |
| Input power | W max. | 76 | 76 | 76 | 76 | 114 | 290 |
| Input current | A max. | 0.66 | 0.66 | 0.48 | 0.48 | 0.72 | 1.70 |
| Net weight | kg | 8.3 | 8.6 | 7.5 | 9.5 | 15.0 | 27.0 |

## MINIFJORD - Split system

$t_i$ = 0°C - DT1 = 8K

| Split system | +32°C | MIP ... | 3 AD MF 3 | 5 AD MF 4 | 7 AD MR 110 | 10 AD MR 135 | 13 AD MR 210 | 25 AD MUC 320 |
|---|---|---|---|---|---|---|---|---|
| Capacity R404A (1) | | kW | **0,97** | **1,13** | **1,54** | **1,71** | **2,17** | **3,83** |
| Input power (1) | | kW | **0,71** | **0,83** | **1,12** | **1,23** | **1,55** | **2,44** |
| Room volume (2) | | $m^3$ | 2 | 4 | 7 | 9 | 17 | 30 |

| Condensing unit | MIB ... | P 3A | P 5A | P 7A | P 10A | P 13A | P 25A |
|---|---|---|---|---|---|---|---|
| Input power | W max. | 490 | 680 | 980 | 1090 | 1410 | 2270 |
| Input current | A max. | 5,0 | 5,6 | 6,0 | 6,8 | 8,7 | 5,7 |

| Unit cooler | | | MF 3 | MF 4 | MR 110 | MR 135 | MR 210 | MUC 320 |
|---|---|---|---|---|---|---|---|---|
| Nb x Ø | | mm | 2 x 200 | 2 x 200 | 2 x 200 | 2 x 200 | 3 x 200 | 2 x 300 |
| Air flow | | $m^3/h$ | 460 | 430 | 650 | 580 | 870 | 2076 |
| Input power | | W max. | 76 | 76 | 76 | 76 | 114 | 290 |
| Input current | | A max. | 0.66 | 0.66 | 0.48 | 0.48 | 0.72 | 1.70 |
| Electric defrost | + E1K | W max. | 330 | 330 | 440 | 730 | 1200 | 960 |
| | | A max. | 1.44 | 1.44 | 2.0 | 3.3 | 5.5 | 4.2 |
| Net weight | | kg | 8.3 | 8.6 | 7.5 | 9.5 | 15.0 | 27.0 |

*(1) 10K superheating - 3K subcooling.*
*(2) Room volume indicated for: Insulation 80 mm floor not insulated (positive) 150 mm insulated floor (negative).*
*Introduction 20 kg/m3 per day at 20°C (positive) and -9°C (negative) - Operation = 18 h/day 32°C ext.*

| | CAC | CEV | RPC | RPE | SEC | KHE | KRE | ECC |
|---|---|---|---|---|---|---|---|---|
| **MINI** | O | O | O | O | O | O | - | O |
| **MINIFJORD** | O | - | O | O | O | O | O | O |

## MINI - Condensing unit

Low temperature range

| Condensing unit | | MIB ... | N 8A | N 14A | N 26A |
|---|---|---|---|---|---|
| Capacity R404A (1) | | kW | **0,50** | **0,67** | **1,40** |
| Input power (1) | | kW | **0,64** | **0,79** | **1,48** |
| Compressor | | HP | 3/4 | 1 1/2 | 2.3 |
| Voltage | | 50Hz | 230V/1+T | 230V/1+T | 400V/3+N+T |
| Air flow | | $m^3/h$ | 700 | 850 | 2000 |
| Max. input current | | A | 5,0 | 6,2 | 5,5 |
| Dimensions | L | mm | 790 | 790 | 890 |
| | P | mm | 352 | 352 | 460 |
| | H | mm | 370 | 370 | 570 |
| | D | mm | 600 | 600 | 770 |
| | F | mm | 200 | 200 | 350 |
| Suction | | Ø | 1/2" | 1/2" | 5/8" |
| Liquid | | Ø | 1/4" | 1/4" | 3/8" |
| Net weight | | kg | 52 | 57 | 65 |

*(1) Refrigeration capacity with: Evaporation temperature -35°C - Ambient temperature +32°C -10 K superheating - 3K subcooling.*

## MINIFJORD - Split system

$t_i$ = -18°C - DT1 = 8K

| Split system | +32°C | MIN ... | 8A MRE 135 | 14A MRE 210 | 26A LUC 350 |
|---|---|---|---|---|---|
| Capacity R404A (1) | | kW | **1,00** | **1,09** | **2,30** |
| Input power (1) | | kW | **1,05** | **1,13** | **2,35** |
| Room volume (2) | | $m^3$ | 8 | 16 | 33 |

| Condensing unit | MIB ... | N 8A | N 14A | N 26A |
|---|---|---|---|---|
| Input power | W max. | 960 | 1265 | 2180 |
| Input current | A max. | 5,0 | 6,2 | 5,5 |

| Unit cooler | | MRE 135 | MRE 210 | LUC 350 |
|---|---|---|---|---|
| Nb x Ø | mm | 2 x 200 | 3 x 200 | 2 x 300 |
| Air flow | $m^3/h$ | 580 | 870 | 2076 |
| Input power | W max. | 806 | 1314 | 3290 |
| Input current | A max. | 3.78 | 6.22 | 6.10 |
| Net weight | kg | 9.5 | 15.0 | 27.0 |

## MINIFJORD - Split system

$t_i$ = -25°C - DT1 = 6K

| Split system | +32°C | MIN ... | 8A MRE 135 | 14A MRE 210 | 26A LUC 350 |
|---|---|---|---|---|---|
| Capacity R404A (1) | | kW | **0,78** | **0,83** | **1,74** |
| Input power (1) | | kW | **0,96** | **0,99** | **2,00** |
| Room volume (2) | | $m^3$ | 5 | 7 | 18 |

| Condensing unit | MIB ... | N 8A | N 14A | N 26A |
|---|---|---|---|---|
| Input power | W max. | 870 | 1080 | 1820 |
| Input current | A max. | 5,0 | 6,2 | 5,5 |

| Unit cooler | | MRE 135 | MRE 210 | LUC 350 |
|---|---|---|---|---|
| Nb x Ø | mm | 2 x 200 | 3 x 200 | 2 x 300 |
| Air flow | $m^3/h$ | 580 | 870 | 2076 |
| Input power | W max. | 806 | 1314 | 3290 |
| Input current | A max. | 3.78 | 6.22 | 6.10 |
| Net weight | kg | 9.5 | 15.0 | 27.0 |

*(1) 10K superheating - 3K subcooling.*
*(2) Room volume indicated for: Insulation 80 mm floor not insulated (positive) 150 mm insulated floor (negative).*
*Introduction 20 kg/m3 per day at 20°C (positive) and -9°C (negative) - Operation = 18 h/day 32°C ext.*

| | CAC | CEV | RPC | RPE | SEC | KHE | KRE | ECC |
|---|---|---|---|---|---|---|---|---|
| **MINI** | O | O | O | O | O | O | - | O |
| **MINIFJORD** | O | - | O | O | O | O | O | O |

HEATCRAFT™
Worldwide Refrigeration

E Solutions
Efficiency • Environment

# Condensing unit and Split system

## VANGUARD range

- This encased air condensing unit comprises 19 models:
  - 13 to meet chill application requirements,
  - 6 to meet low temperature application requirements.
- Coil using micro-channel technology:
  - made entirely of anti-corrosion treated and recyclable aluminium,
  - largely dimensioned for use at high outdoor temperatures.
  - with less internal refrigerant (30%).

## SPLIT VANGUARD range

- The “ready-to-install” Split System model is proposed with various unit cooler types according to application requirements:
  - ceiling unit (MR and MH),
  - dual-discharge (TA),
  - and cubic (MUC-LUC and SKB).
- Cold rooms from 3 to 70 m$^3$.

*Low noise level*
*Environment*

0.5 12.2 kW

FRIGA-BOHN

HYFRA® PEDIA

HK® REFRIGERATION

Heatcraft reserves itself the right to make changes at any time without preliminary notice - Photos non-contractual

## Market segments

*FFS* *Cafés – Hotels - Restaurants – Corner shops – Mini-markets*

Size TA

Size TB

***VANGUARD is a "turnkey" encased condensing unit designed for outdoor use.***

***It may be used alone to supply refrigerated displays or cabinets or as a SPLIT VANGUARD system (with a fully fitted unit cooler + optimised control) for cold rooms or food preparation areas.***

***Furthermore, this "turnkey" unit also combines reliability and sturdiness with accessibility and silence. Indeed, all standard models in the VANGUARD range have a very low noise level.***
***The power range is achieved with a small number of models, equipped with all elements required for system operation.***
***This renders selection of a model much easier.***

## Description

### Condensing unit

#### Casing

- The casing is made of sheet steel, pre-painted RAL7035, designed for outdoor use offering a high resistance to adverse weather conditions. For the size TB, the front and rear panels of the compressor compartment are made of sheet steel, pre-painted in black RAL9005.

#### Compressor

- Two compressor technologies:
- H: Hermetic piston up to 1 ½ HP chill and 1 ¼ HP low temperature.
- Sc: Scroll. From 2 HP chill and 2 ½ HP low temperature.
- In the case of TB models, the compressor compartment is noise insulated to reduce the unit noise level.

#### Condenser

- The main innovative aspect of the VANGUARD condensing units resides in the use of new condenser coil technology. This aluminium, micro-channel coil technology has proven its value in the automobile sector and is now used for its numerous advantages in the refrigeration sector.
- Furthermore, the coils are largely dimensioned in order to function correctly at high ambient temperatures (+43°C).
- These coils offer greater efficiency than traditional coils (copper tubes/aluminium fins). They are much lighter and the reduced rack weight renders them easier to handle (less risk of damage or injury when installing the unit).
- Furthermore, they are extremely reliable and sturdy (high impact resistance) over a long period of time and offer an excellent corrosion resistance. An additional protection is provided with a special coating on the coils.
- As the coil is brazed in a single operation, the risk of leakage is considerably reduced and the quality inspections are stringent: 100% of the products are tested with helium.
- The coil is 100 % recyclable (a single metal) and the internal refrigerant volume is considerably reduced.
- Each model in the range is equipped with a single fan controlled with a voltage speed controller to help reduce system running noise at night.
- The three references of these fans (Ø 300 mm, Ø 400 mm Ø 600 mm) are all class F and index IP55.

## Advantages

### Installation

Electrical components supplied complete and factory pre-wired for fast installation.

Reduced size, compact and sturdy for easy handling and installation in confined spaces.

### Servicing / Maintenance

All sheet metal casing elements are easily removed and offer total access to all unit components.

Once the casing elements have been removed (side, front and rear panels for the size TB), the unit structure is self-supporting thus simplifying any work on the unit (refer to illustration at top of page).

### Switching cabinet

- The switching box is made of ABS with protection rating IP66 and contains all protection and control components of the rack:

- Protection of compressor against overloads and surge voltages.
- Protection of fan against surge voltages.
- Controller supply and cold station terminals.
- Isolator switch.
- A fault relay for three-phase models.

### Other equipment

- Speed controller: All models are equipped with a speed controller to guarantee optimum control of the condensation pressure.
- Liquid receiver (2l., 3l., 5l.) with shut-off valve at the receiver outlet.
- Liquid line with valve, dryer filter and hygroscopic indicator.
- LP pressure regulator and HP safety pressure switch.
- Casing heater.

## Split System model

The VANGUARD range is also proposed in a Split System model, with 6 standard pre-selected applications (4 at medium temperature and 2 at low temperature), each equipped with a unit cooler adapted to specific requirements (cubic, ceiling unit, dual-discharge...).

## Unit coolers

- Dual-discharge, or cubic ceiling-mounted unit coolers (low nose) according to the applications, with factory-fitted expansion and solenoid valves.
- The maximum distance between the condensing unit and the unit cooler is 20 m.

**For further details, refer to our commercial unit coolers documentation.**

| | | | | | |
|---|---|---|---|---|---|
| Application 1<br>Room temp. +8°C<br>DT1 = 10 K | MR | - | TA | - | - |
| Application 2<br>Room temp. +6°C<br>DT1 = 6 K | MR | MH | - | MUC | SKB |
| Application 3<br>Room temp. +2°C<br>DT1 = 8 K | MR | MH | - | MUC | - |
| Application 4<br>Room temp. +0°C<br>DT1 = 8 K | MR<br>+ defrost<br>E1U | - | - | MUC<br>+ defrost<br>E1U | - |
| Application 5<br>Room temp. -20°C<br>DT1 = 7 K | MRE | - | - | LUC | - |
| Application 6<br>Room temp. -25°C<br>DT1 = 6 K | MRE | - | - | LUC | - |

## Designation

# VG Sc(1)P(2) 051(3) TA 2R8P(4)

(1) **H** = Hermetic compressor - **Sc** = Scroll compressor
(2) **P** = Chill range – **N** : Low temperature range
(3) Model
(4) Unit cooler

## Certifications

## Control

- Electronic control.
- Defrost control (air or electrical).
- Lighting control.
- Display and signalling of alarms.
- An additional programmable contact (door opening, trapped person safety...).
- Forced operation incorporated for rapid cooling or deep-freezing.

## VANGUARD - Condensing unit

Chill temperature

| Condensing unit | | VG ... | HP 012 | HP 014 | HP 017 | HP 020 | HP 024 | HP 030 | HP 038 | ScP 043 | ScP 050 | ScP 065 | ScP 075 | ScP 086 | ScP 103 |
|---|---|---|---|---|---|---|---|---|---|---|---|---|---|---|---|
| Compressor power | | HP | 3/8 | 1/2 | 5/8 | 3/4 | 1 | 1 1/4 | 1 1/2 | 2 | 2 1/2 | 3 | 4 | 5 | 6 |
| Voltage | | 50Hz | 230V/1 | 230V/1 | 230V/1 | 230V/1 | 230V/1 | 230V/1 | 230V/1 | 400V/3 | 400V/3 | 400V/3 | 400V/3 | 400V/3 | 400V/3 |
| Capacity R404A (1) | | kW | **1,18** | **1,40** | **1,68** | **1,98** | **2,30** | **2,99** | **3,82** | **4,23** | **5,03** | **6,56** | **7,46** | **8,65** | **10,32** |
| Input power (1) | | kW | 0,65 | 0,76 | 0,95 | 1,05 | 1,15 | 1,41 | 1,99 | 1,79 | 2,20 | 2,74 | 3,18 | 3,62 | 4,64 |
| Input current | | A max. | 5,0 | 5,6 | 6,6 | 6,0 | 6,8 | 8,7 | 12,9 | 4,6 | 5,6 | 8,0 | 8,9 | 10,7 | 12,7 |
| Acoustic (1) (2) | Lp at 10m | dB(A) | 35 | 36 | 38 | 39 | 40 | 38 | 37 | 37 | 37 | 41 | 42 | 43 | 44 |
| Ventilation | 230V/1/50Hz | mm | 1 x 300 | 1 x 300 | 1 x 300 | 1 x 300 | 1 x 300 | 1 x 300 | 1 x 400 | 1 x 400 | 1 x 400 | 1 x 600 | 1 x 600 | 1 x 600 | 1 x 600 |
| Liquid capacity | | l. | 2 | 2 | 2 | 2 | 2 | 2 | 2 | 3 | 3 | 3 | 5 | 5 | 5 |
| Connections | Suction | Ø | 3/8" | 1/2" | 1/2" | 1/2" | 1/2" | 5/8" | 5/8" | 5/8" | 7/8" | 7/8" | 7/8" | 7/8" | 1"1/8 |
| | Liquid | Ø | 1/4" | 3/8" | 3/8" | 3/8" | 3/8" | 3/8" | 3/8" | 3/8" | 3/8" | 1/2" | 1/2" | 1/2" | 1/2" |
| Casing | Size | | **TA** | **TA** | **TA** | **TA** | **TA** | **TB** | **TB** | **TB** | **TB** | **TB** | **TB** | **TB** | **TB** |
| Net weight | | kg | 100 | 100 | 100 | 100 | 100 | 150 | 150 | 150 | 160 | 170 | 170 | 180 | 180 |

*(1) Evaporation temperature -5°C – Ambient temperature +32°C - Superheating: 10K - Subcooling: 3K.*
*(2) Sound pressure in dB(A) measured at 10 m, line of sight in a reflective surface, in accordance with pre-standard EN 13487 (parallelepiped reference surface).*

## SPLIT VANGUARD - Split system

$t_i$ = +8°C - DT1 = 10 K

| Split system | +32°C | VG... | HP 012 | HP 014 | HP 017 | HP 020 | HP 024 | HP 030 | HP 038 | ScP 043 | ScP 050 | ScP 065 | ScP 075 | ScP 086 | ScP 103 |
|---|---|---|---|---|---|---|---|---|---|---|---|---|---|---|---|
| | | | MR 100L | MR 110R | MR 135R | MR 160R | MR 180R | MR 210R | TA 1R6P | TA 2R8P | TA 2R6P | TA 3R6P | TA 4R6P | TA 5R8P | TA 5R6P |
| Capacity R404A (1) | | kW | **1,33** | **1,57** | **1,88** | **2,21** | **2,57** | **3,34** | **4,24** | **4,71** | **5,57** | **7,30** | **8,30** | **9,62** | **11,44** |
| Input power (1) | | kW | **0,75** | **0,87** | **1,07** | **1,21** | **1,32** | **1,59** | **2,19** | **1,94** | **2,42** | **2,95** | **3,38** | **3,86** | **5,00** |
| Room volume (indication) | | $m^3$ | 12 | 14 | 17 | 20 | 24 | 32 | 42 | 48 | 58 | 81 | 96 | 116 | 146 |

| Unit cooler | | | MR 100L | MR 110R | MR 135R | MR 160R | MR 180R | MR 210R | TA 1R6P | TA 2R8P | TA 2R6P | TA 3R6P | TA 4R6P | TA 5R8P | TA 5R6P |
|---|---|---|---|---|---|---|---|---|---|---|---|---|---|---|---|
| Surface | | $m^2$ | 2,53 | 3,66 | 6,10 | 8,04 | 8,04 | 10,05 | 15,23 | 15,23 | 15,23 | 22,84 | 30,43 | 34,26 | 34,26 |
| Circuit volume | | $dm^3$ | 0,63 | 0,63 | 1,05 | 1,1 | 1,38 | 1,73 | 2,23 | 2,23 | 2,23 | 3,35 | 4,46 | 5,02 | 5,02 |
| Fan | Air flow | $m^3/h$ | 660 | 650 | 580 | 880 | 880 | 870 | 1310 | 2100 | 2910 | 2750 | 2615 | 2975 | 4125 |
| | Air throw | m | 3,7 | 3,7 | 3,5 | 4,1 | 4,1 | 4,0 | 2 x 7 | 2 x 6 | 2 x 7 | 2 x 7 | 2 x 7 | 2 x 5 | 2 x 7 |
| | Nb x Ø | mm | 2 x 200 | 2 x 200 | 2 x 200 | 3 x 200 | 3 x 200 | 3 x 200 | 1 x 350 | 2 x 350 | 2 x 350 | 2 x 350 | 2 x 350 | 3 x 350 | 3 x 350 |
| | Current | A max. | 0,48 (230V/1) | 0,48 (230V/1) | 0,48 (230V/1) | 0,72 (230V/1) | 0,72 (230V/1) | 0,72 (230V/1) | 0,6 (230V/1) | 0,8 (230V/1) | 1,2 (230V/1) | 1,2 (230V/1) | 1,2 (230V/1) | 1,2 (230V/1) | 1,8 (230V/1) |

## SPLIT VANGUARD - Split system

$t_i$ = +6°C - DT1 = 6 K

| Split system | +32°C | VG... | HP 012 | HP 014 | HP 017 | HP 020 | HP 024 | HP 030 | HP 038 | ScP 043 | ScP 050 | ScP 065 | ScP 075 | ScP 086 | ScP 103 |
|---|---|---|---|---|---|---|---|---|---|---|---|---|---|---|---|
| | | | MR 160R | MR 180R | MR 210R | MR 270R | MH 320R | MH 380R | MUC 420R | MUC 520R | MUC 620R | MUC 640R | MUC 660R | MUC 781R | SKB 10R |
| Capacity R404A (1) | | kW | **1,43** | **1,69** | **2,03** | **2,37** | **2,75** | **3,59** | **4,53** | **5,04** | **5,94** | **7,83** | **8,90** | **10,29** | **12,21** |
| Input power (1) | | kW | **0,81** | **0,92** | **1,13** | **1,28** | **1,48** | **1,75** | **2,53** | **2,16** | **2,69** | **3,21** | **3,66** | **4,40** | **5,49** |
| Room volume (indication) | | $m^3$ | 17 | 20 | 24 | 28 | 33 | 44 | 56 | 63 | 75 | 102 | 117 | 138 | 169 |

| Unit cooler | | | MR 160R | MR 180R | MR 210R | MR 270R | MH 320R | MH 380R | MUC 420R | MUC 520R | MUC 620R | MUC 640R | MUC 660R | MUC 781R | SKB 10R |
|---|---|---|---|---|---|---|---|---|---|---|---|---|---|---|---|
| Surface | | $m^2$ | 8,04 | 8,04 | 10,05 | 13,40 | 9,73 | 12,98 | 18,20 | 21,40 | 25,80 | 40,20 | 48,70 | 38,60 | 38,00 |
| Circuit volume | | $dm^3$ | 1,1 | 1,38 | 1,73 | 2,30 | 1,67 | 2,23 | 3,50 | 4,00 | 4,80 | 6,90 | 8,30 | 7,20 | 6,57 |
| Fan | Air flow | $m^3/h$ | 880 | 880 | 870 | 1160 | 2340 | 2230 | 2562 | 3252 | 3696 | 3264 | 3486 | 7895 | 8600 |
| | Air throw | m | 4,1 | 4,1 | 4,0 | 4,5 | 16,0 | 16,0 | 12,0 | 12,0 | 12,0 | 12,0 | 12,0 | 30,0 | 18,0 |
| | Nb x Ø | mm | 3 x 200 | 3 x 200 | 3 x 200 | 4 x 200 | 2 x 300 | 2 x 300 | 2 x 300 | 3 x 300 | 3 x 300 | 3 x 300 | 3 x 300 | 2 x 450 | 2 X 450 |
| | Current | A max. | 0,72 (230V/1) | 0,72 (230V/1) | 0,72 (230V/1) | 0,96 (230V/1) | 1,54 (230V/1) | 1,54 (230V/1) | 1,70 (230V/1) | 2,55 (230V/1) | 2,55 (230V/1) | 2,55 (400V/3) | 2,55 (400V/3) | 2,0 (400V/3) | 2,0 (400V/3) |

*(1) Superheating: 10K - Subcooling: 3K.*
*(2) Sound pressure in dB(A) measured at 10 m, line of sight in a reflective surface, in accordance with pre-standard EN 13487 (parallelepiped reference surface).*

## VANGUARD - Condensing unit

Chill temperature

| Condensing unit | | VG ... | HP 012 | HP 014 | HP 017 | HP 020 | HP 024 | HP 030 | HP 038 | ScP 043 | ScP 050 | ScP 065 | ScP 075 | ScP 086 | ScP 103 |
|---|---|---|---|---|---|---|---|---|---|---|---|---|---|---|---|
| Compressor power | | HP | 3/8 | 1/2 | 5/8 | 3/4 | 1 | 1 1/4 | 1 1/2 | 2 | 2 1/2 | 3 | 4 | 5 | 6 |
| Voltage | | 50Hz | 230V/1 | 230V/1 | 230V/1 | 230V/1 | 230V/1 | 230V/1 | 230V/1 | 400V/3 | 400V/3 | 400V/3 | 400V/3 | 400V/3 | 400V/3 |
| Capacity R404A (1) | | kW | **1,18** | **1,40** | **1,68** | **1,98** | **2,30** | **2,99** | **3,82** | **4,23** | **5,03** | **6,56** | **7,46** | **8,65** | **10,32** |
| Input power (1) | | kW | 0,65 | 0,76 | 0,95 | 1,05 | 1,15 | 1,41 | 1,99 | 1,79 | 2,20 | 2,74 | 3,18 | 3,62 | 4,64 |
| Input current | | A max. | 5,0 | 5,6 | 6,6 | 6,0 | 6,8 | 8,7 | 12,9 | 4,6 | 5,6 | 8,0 | 8,9 | 10,7 | 12,7 |
| Acoustic (1) (2) | Lp at 10m | dB(A) | 35 | 36 | 38 | 39 | 40 | 38 | 37 | 37 | 37 | 41 | 42 | 43 | 44 |
| Ventilation | 230V/1/50Hz | mm | 1 x 300 | 1 x 300 | 1 x 300 | 1 x 300 | 1 x 300 | 1 x 300 | 1 x 400 | 1 x 400 | 1 x 400 | 1 x 600 | 1 x 600 | 1 x 600 | 1 x 600 |
| Liquid capacity | | l. | 2 | 2 | 2 | 2 | 2 | 2 | 2 | 3 | 3 | 3 | 5 | 5 | 5 |
| Connections | Suction | Ø | 3/8" | 1/2" | 1/2" | 1/2" | 1/2" | 5/8" | 5/8" | 5/8" | 7/8" | 7/8" | 7/8" | 7/8" | 1"1/8 |
| | Liquid | Ø | 1/4" | 3/8" | 3/8" | 3/8" | 3/8" | 3/8" | 3/8" | 3/8" | 3/8" | 1/2" | 1/2" | 1/2" | 1/2" |
| Casing | Size | | **TA** | **TA** | **TA** | **TA** | **TA** | **TB** | **TB** | **TB** | **TB** | **TB** | **TB** | **TB** | **TB** |
| Net weight | | kg | 100 | 100 | 100 | 100 | 100 | 150 | 150 | 150 | 160 | 170 | 170 | 180 | 180 |

*(1) Evaporation temperature -5°C – Ambient temperature +32°C - Superheating: 10K - Subcooling: 3K.*
*(2) Sound pressure in dB(A) measured at 10 m, line of sight in a reflective surface, in accordance with pre-standard EN 13487 (parallelepiped reference surface).*

## SPLIT VANGUARD - Split system

$t_i$ = +2°C - DT1 = 8 K

| Split system | +32°C | VG... | HP 012 | HP 014 | HP 017 | HP 020 | HP 024 | HP 030 | HP 038 | ScP 043 | ScP 050 | ScP 065 | ScP 075 | ScP 086 | ScP 103 |
|---|---|---|---|---|---|---|---|---|---|---|---|---|---|---|---|
| | | | MR 110R | MR 135R | MR 160R | MR 180R | MR 210R | MR 270R | MH 380R | MUC 320R | MUC 420R | MUC 520R | MUC 620R | MUC 640R | MUC 660R |
| Capacity R404A (1) | | kW | **1,13** | **1,35** | **1,62** | **1,91** | **2,22** | **2,88** | **3,69** | **4,08** | **4,86** | **6,33** | **7,19** | **8,34** | **9,98** |
| Input power (1) | | kW | **0,72** | **0,83** | **1,05** | **1,15** | **1,25** | **1,54** | **2,19** | **2,03** | **2,54** | **3,17** | **3,61** | **4,04** | **5,05** |
| Room volume (indication) | | $m^3$ | 10 | 12 | 14 | 17 | 19 | 25 | 33 | 36 | 43 | 57 | 65 | 77 | 93 |

| Unit cooler | | | MR 110R | MR 135R | MR 160R | MR 180R | MR 210R | MR 270R | MH 380R | MUC 320R | MUC 420R | MUC 520R | MUC 620R | MUC 640R | MUC 660R |
|---|---|---|---|---|---|---|---|---|---|---|---|---|---|---|---|
| Surface | | $m^2$ | 3,66 | 6,10 | 8,04 | 8,04 | 10,05 | 13,40 | 12,98 | 13,40 | 18,20 | 21,40 | 25,80 | 40,20 | 48,70 |
| Circuit volume | | $dm^3$ | 0,63 | 1,05 | 1,1 | 1,38 | 1,73 | 2,30 | 2,23 | 2,60 | 3,50 | 4,00 | 4,80 | 6,90 | 8,30 |
| Fan | Air flow | $m^3/h$ | 650 | 580 | 880 | 880 | 870 | 1160 | 2230 | 2076 | 2562 | 3252 | 3696 | 3264 | 3486 |
| | Air throw | m | 3,7 | 3,5 | 4,1 | 4,1 | 4,0 | 4,5 | 16,0 | 12,0 | 12,0 | 12,0 | 12,0 | 12,0 | 12,0 |
| | Nb x Ø | mm | 2 x 200 | 2 x 200 | 3 x 200 | 3 x 200 | 3 x 200 | 4 x 200 | 2 x 300 | 2 x 300 | 2 x 300 | 3 x 300 | 3 x 300 | 3 x 300 | 3 x 300 |
| | Current | A max. | 0,48 (230V/1) | 0,48 (230V/1) | 0,72 (230V/1) | 0,72 (230V/1) | 0,72 (230V/1) | 0,96 (230V/1) | 1,54 (230V/1) | 1,70 (230V/1) | 1,70 (230V/1) | 2,55 (230V/1) | 2,55 (230V/1) | 2,55 (400V/3) | 2,55 (400V/3) |

## SPLIT VANGUARD - Split system

$t_i$ = 0°C - DT1 = 8 K

| Split system | +32°C | VG... | HP 012 | HP 014 | HP 017 | HP 020 | HP 024 | HP 030 | HP 038 | ScP 043 | ScP 050 | ScP 065 | ScP 075 | ScP 086 | ScP 103 |
|---|---|---|---|---|---|---|---|---|---|---|---|---|---|---|---|
| | | | MR 110R | MR 135R | MR 160R | MR 180R | MR 210R | MR 270R | MUC 285R | MUC 320R | MUC 420R | MUC 520R | MUC 620R | MUC 640R | MUC 660R |
| Capacity R404A (1) | | kW | **1,05** | **1,24** | **1,50** | **1,77** | **2,05** | **2,67** | **3,43** | **3,78** | **4,53** | **5,87** | **6,68** | **7,75** | **9,31** |
| Input power (1) | | kW | **0,71** | **0,85** | **1,03** | **1,12** | **1,25** | **1,57** | **2,24** | **2,15** | **2,63** | **3,16** | **3,59** | **4,02** | **5,28** |
| Room volume (indication) | | $m^3$ | 8 | 9 | 12 | 14 | 16 | 21 | 28 | 31 | 38 | 50 | 58 | 69 | 86 |

| Unit cooler + E1U | | | MR 110R | MR 135R | MR 160R | MR 180R | MR 210R | MR 270R | MUC 285R | MUC 320R | MUC 420R | MUC 520R | MUC 620R | MUC 640R | MUC 660R |
|---|---|---|---|---|---|---|---|---|---|---|---|---|---|---|---|
| Surface | | $m^2$ | 3,66 | 6,10 | 8,04 | 8,04 | 10,05 | 13,40 | 10,00 | 13,40 | 18,20 | 21,40 | 25,80 | 40,20 | 48,70 |
| Circuit volume | | $dm^3$ | 0,63 | 1,05 | 1,1 | 1,38 | 1,73 | 2,30 | 1,90 | 2,60 | 3,50 | 4,00 | 4,80 | 6,90 | 8,30 |
| Fan | Air flow | $m^3/h$ | 650 | 580 | 880 | 880 | 870 | 1160 | 2336 | 2076 | 2562 | 3252 | 3696 | 3264 | 3486 |
| | Air throw | m | 3,7 | 3,5 | 4,1 | 4,1 | 4,0 | 4,5 | 12,0 | 12,0 | 12,0 | 12,0 | 12,0 | 12,0 | 12,0 |
| | Nb x Ø | mm | 2 x 200 | 2 x 200 | 3 x 200 | 3 x 200 | 3 x 200 | 4 x 200 | 2 x 300 | 2 x 300 | 2 x 300 | 3 x 300 | 3 x 300 | 3 x 300 | 3 x 300 |
| | Current | A max. | 0,48 (230V/1) | 0,48 (230V/1) | 0,72 (230V/1) | 0,72 (230V/1) | 0,72 (230V/1) | 0,96 (230V/1) | 1,70 (230V/1) | 1,70 (230V/1) | 1,70 (230V/1) | 2,55 (230V/1) | 2,55 (230V/1) | 2,55 (230V/1) | 2,55 (230V/1) |

*(1) Superheating: 10K - Subcooling: 3K.*
*(2) Sound pressure in dB(A) measured at 10 m, line of sight in a reflective surface, in accordance with pre-standard EN 13487 (parallelepiped reference surface).*

## VANGUARD - Groupe de condensation

Low temperature range

| Condensing unit | | VG ... | HN 008 | HN 013 | ScN 022 | ScN 027 | ScN 031 |
|---|---|---|---|---|---|---|---|
| Compressor power | | HP | 3/4 | 1 1/4 | 2 1/2 | 3 | 4 |
| Voltage | | 50Hz | 230V/1 | 230V/1 | 400V/3 | 400V/3 | 400V/3 |
| Capacity R404A (1) | | kW | **0,71** | **1,24** | **2,21** | **2,72** | **3,06** |
| Input power (1) | | kW | 0,71 | 1,18 | 1,96 | 2,4 | 2,65 |
| Input current | | A max. | 5,0 | 7,9 | 6,1 | 6,9 | 7,1 |
| Acoustic (1) (2) | Lp at 10m | dB(A) | 34 | 38 | 38 | 40 | 41 |
| Ventilation | 230V/1/50Hz | mm | 1 x 300 | 1 x 300 | 1 x 400 | 1 x 400 | 1 x 400 |
| Liquid capacity | | l. | 2 | 2 | 2 | 5 | 5 |
| Connections | Suction | Ø | 1/2" | 1/2" | 7/8" | 7/8" | 7/8" |
| | Liquid | Ø | 3/8" | 3/8" | 3/8" | 3/8" | 3/8" |
| Casing | Size | | **TA** | **TA** | **TB** | **TB** | **TB** |
| Net weight | | kg | 100 | 100 | 150 | 160 | 170 |

*(1) Evaporation temperature -30°C – Ambient temperature +32°C - Superheating: 10K - Subcooling: 3K.*
*(2) Sound pressure in dB(A) measured at 10 m, line of sight in a reflective surface, in accordance with pre-standard EN 13487 (parallelepiped reference surface).*

## SPLIT VANGUARD - Split system

$t_i$ = -20°C - DT1 = 7 K

| Split system | +32°C | VG... | HN 008 | HN 013 | ScN 022 | ScN 027 | ScN 031 |
|---|---|---|---|---|---|---|---|
| | | | MRE 120C | MRE 190C | LUC 345C | LUC 435C | LUC 545C |
| Capacity R404A (1) | | kW | **0,82** | **1,44** | **2,52** | **3,08** | **3,48** |
| Input power (1) | | kW | **0,84** | **1,39** | **2,35** | **2,80** | **3,20** |
| Room volume (indication) | | $m^3$ | 9 | 18 | 36 | 46 | 54 |

| Unit cooler | | | MRE 120C | MRE 190C | LUC 345C | LUC 435C | LUC 545C |
|---|---|---|---|---|---|---|---|
| Surface | | $m^2$ | 4,22 | 6,96 | 11,66 | 15,98 | 18,64 |
| Circuit volume | | $dm^3$ | 1,05 | 1,73 | 3,30 | 4,40 | 5,00 |
| Fan | Air flow | $m^3/h$ | 620 | 930 | 2075 | 2561 | 3250 |
| | Air throw | m | 3,5 | 4,0 | 12,0 | 12,0 | 12,0 |
| | Nb x Ø | mm | 2 x 200 | 3 x 200 | 2 x 300 | 2 x 300 | 3 x 300 |
| | Current | A max. | 0,48 (230V/1) | 0,72 (230V/1) | 1,70 (230V/1) | 1,70 (230V/1) | 2,55 (230V/1) |

## SPLIT VANGUARD - Split system

$t_i$ = -25°C - DT1 = 6 K

| Split system | +32°C | VG... | HN 008 | HN 013 | ScN 022 | ScN 027 | ScN 031 |
|---|---|---|---|---|---|---|---|
| | | | MRE 120C | MRE 190C | LUC 345C | LUC 435C | LUC 545C |
| Capacity R404A (1) | | kW | **0,67** | **1,18** | **2,12** | **2,61** | **2,93** |
| Input power (1) | | kW | **0,77** | **1,27** | **2,30** | **2,73** | **3,09** |
| Room volume (indication) | | $m^3$ | 8 | 14 | 29 | 37 | 43 |

| Unit cooler | | | MRE 120C | MRE 190C | LUC 345C | LUC 435C | LUC 545C |
|---|---|---|---|---|---|---|---|
| Surface | | $m^2$ | 4,22 | 6,96 | 11,66 | 15,98 | 18,64 |
| Circuit volume | | $dm^3$ | 1,05 | 1,73 | 3,30 | 4,40 | 5,00 |
| Fan | Air flow | $m^3/h$ | 620 | 930 | 2075 | 2561 | 3250 |
| | Air throw | m | 3,5 | 4,0 | 12,0 | 12,0 | 12,0 |
| | Nb x Ø | mm | 2 x 200 | 3 x 200 | 2 x 300 | 2 x 300 | 3 x 300 |
| | Current | A max. | 0,48 (230V/1) | 0,72 (230V/1) | 1,70 (230V/1) | 1,70 (230V/1) | 2,55 (230V/1) |

*(1) Superheating: 10K - Subcooling: 3K.*
*(2) Sound pressure in dB(A) measured at 10 m, line of sight in a reflective surface, in accordance with pre-standard EN 13487 (parallelepiped reference surface).*

## Condensing unit dimensions

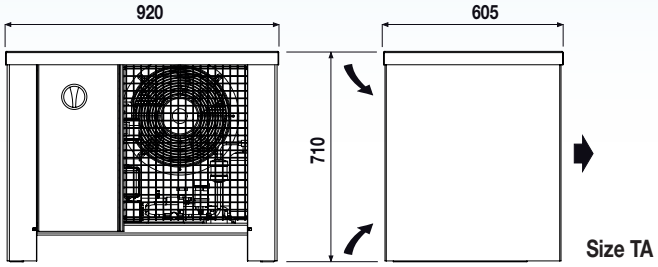


Size TA

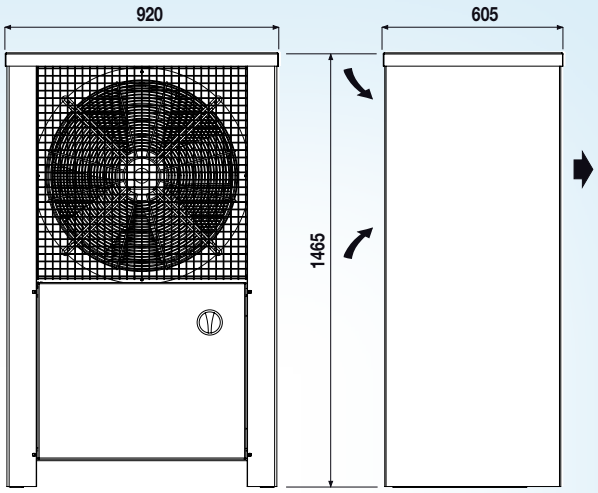


Size TB

## Unit cooler dimensions

### MR

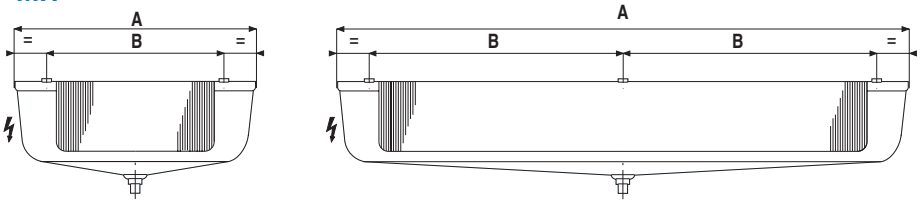


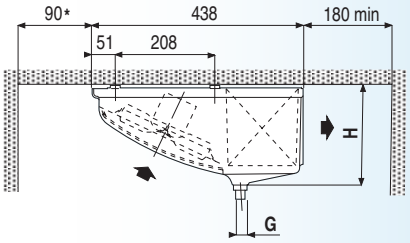


| | 2 x 200 | 3 x 200 | 4 x 200 |
|---|---|---|---|
| A | 784 | 1174 | 1504 |
| B | 596 | 493 | 658 |
| H | 227 | 227 | 209 |
| G | Ø 32 | Ø 32 | 1" G |

### MH

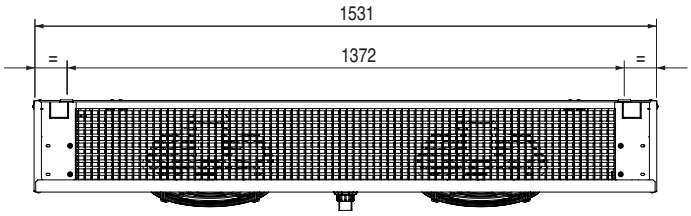


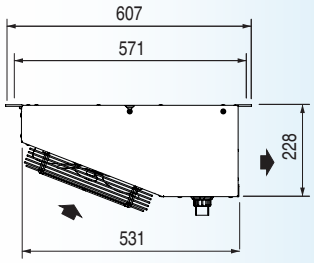


### TA

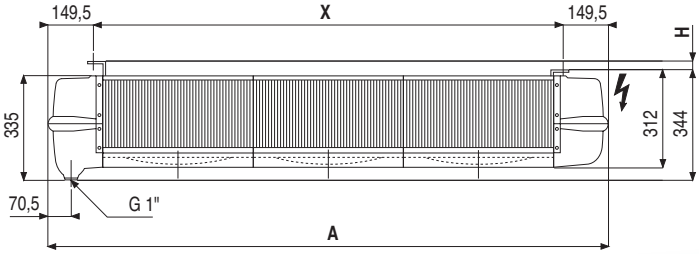


| | 2 x 350 | 3 x 350 |
|---|---|---|
| A | 1366 | 1866 |
| X | 1060 | 1560 |
| H | 17,5 | 35 |

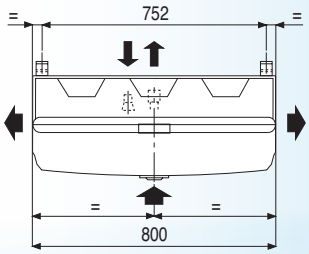


### MUC-LUC

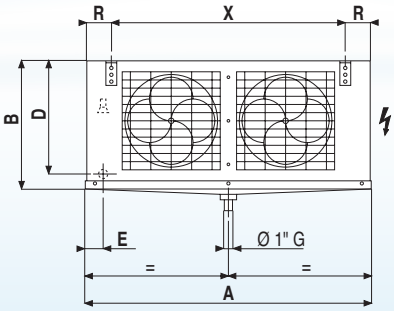


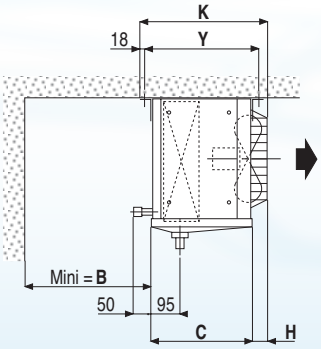


| | 2 x 300 | 3 x 300 | 4 x 300 | 2 x 400 | 2 x 450 |
|---|---|---|---|---|---|
| A | 981 | 1355 | 2348 | 1657 | 1657 |
| B | 400 | 464 | 400 | 495 | 590 |
| C | 365 | 365 | 365 | 482 | 482 |
| D | 355 | 419 | 350 | 447 | 538 |
| E | 89 | 89 | 110 | 110 | 110 |
| H | 53 | 53 | 53 | 68 | 78 |
| K | 456 | 456 | 456 | 596 | 606 |
| R | 122 | 182 | 147 | 147 | 147 |
| X | 722 | 976 | 2036 | 1356 | 1356 |
| Y | 412 | 412 | 412 | 536 | 536 |

## Control unit dimensions

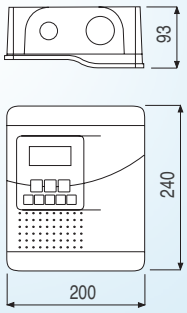

HEATCRAFT™
Worldwide Refrigeration

# Condensing unit and Split system

E Solutions
Efficiency • Environment

## MAXI range

- This encased air condensing unit model:
  - three compressor technologies,
  - a low noise model,
  - an oversized condenser model for hot climates.

## MAXIBOREAL range

- The Split System model is proposed with various unit cooler types according to application requirements:
  - dual-discharge (TA),
  - cubic (MUC-LUC and SKB).
- It covers the refrigeration requirements of cold rooms up to 400 $m^3$.

*Low noise level*

2 ▁▂▃▅▆ 22.5 kW

FRIGA-BOHN

HYFRA® PEDIA

HK® REFRIGERATION

Heatcraft reserves itself the right to make changes at any time without preliminary notice - Photos non-contractual

## Market segments

*FFS* *Cafés – Hotels - Restaurants – Corner shops – Mini-markets*

***MAXIBOREAL is a split system specifically designed to provide maximum comfort: Access to all components, low noise level option, oversized coil for hot climates.***

***Perfect control of the manufacturing process and numerous factory inspections guarantee optimum operation.***

***The 5 pre-selected applications are the following:***

- ***Dual-discharge unit cooler = chambers at +8°C / DT 10 K.***
- ***Cubic unit coolers = chambers at +6°C / DT 6 K, +2°C / DT 8 K, 0°C / DT 8 K and -20°C / DT 7 K.***

***The fin spacing and defrost mode is different for each application.***

***Select for each model:***

- ***The compressor technology:***
  - ***H (Hermetic piston),***
  - ***or SH (semi-hermetic piston),***
  - ***or Sc (Scroll).***
- ***The condenser:***
  - ***standard***
  - ***or S (oversized) for high ambient temperatures up to +43°C.***
- ***The noise level:***
  - ***standard***
  - ***or LN (low noise).***

## Designation

**MAXI**(1) **SH**(2) **P**(3) **66**(4) **A**(5)

**MAXIBOREAL**(1) **SH**(2) **P**(3) **66**(4) **A**(5) **/ T7R6P**(6)

(1) Condensing units / Split systems
(2) **SH** = Semi-hermetic compressor
**Sc** = Scroll compressor
(3) **P** = Chill range – **N** = Low temperature range
(4) Model
(5) **A** = Standard
**AS** = Oversized
(5) **ALN** = Low noise level
(6) Unit cooler

## Advantages

### Installation

Particularly suitable in case of noise restrictions, the ALN model may be installed in an urban environment.

The oversized condenser of the AS model enables installation in zones with high ambient temperatures.

Electrical components supplied complete and factory pre-wired for fast installation.

### Servicing / Maintenance

All sheet metal casing elements (side panels, flaps) are easily removed and offer total access to all unit components.

## Description

### Condensing unit

#### Casing

- This unit is specifically designed for outdoor installation with its pre-painted sheet metal protection casing.

#### Compressor

- A choice of semi-hermetic compressor or Scroll compressor. The following are supplied in all cases: suction and delivery valves, casing heater and oil level indicator.

#### Condenser

- 1 to 4 fans according to the models with various rotation speeds depending on the option retained.

#### Switching cabinet

- The switching enclosure is totally incorporated into the casing and the main isolator switch is protected in a corner case to prevent damage during transport.

#### Other equipment

- The receiver is supplied with a delivery valve. The liquid line comprises as standard a dryer filter, a hygroscopic indicator and an operating valve.
- LP control is provided with an adjustable pressure switch.
- HP safety is provided with an automatic-reset cartridge pressure switched.

## Options

| Kit | Factory | |
|---|---|---|
| | CAC | Additional casing strap (**Scroll**). |
| | PRG | Unit pre-filled with refrigerant (**MAXI**). |
| | RPC | Control of condensation pressure (**MAXI**). |
| | VFA | Valve + suction filter. |
| | SPE | Wiring to terminal rail (without electric board) (**MAXI**). |
| | GPC | Condenser protection guard. |
| | ECC | Crate packaging (for the condensing units). |

## Split System model

- The unit is pre-filled with refrigerant R404A.

## Unit coolers

- Dual-discharge, low noise or cubic unit cooler according to the applications, with factory-fitted expansion and solenoid valves.

**For further details, refer to our commercial unit coolers documentation.**

## Control

- Electronic control.
- Defrost control (air or electric).
- Lighting control.
- Display and signalling of alarms.
- An additional programmable contact (door opening, trapped person safety...).
- Forced operation incorporated for rapid cooling or deep-freezing.

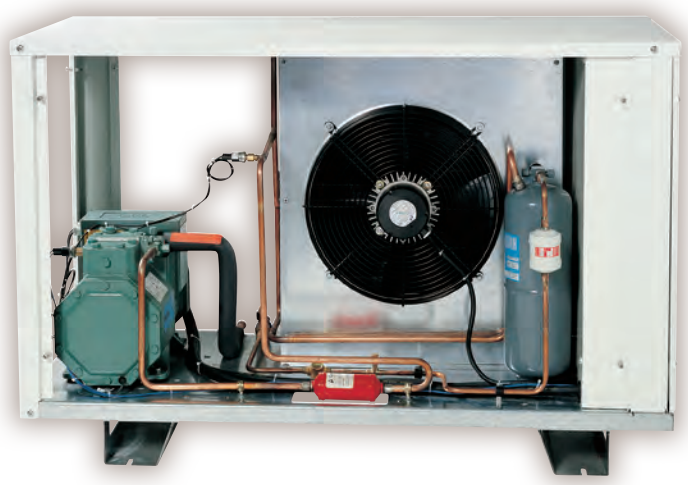

| | | | |
|---|---|---|---|
| Application 1<br>Room temp. +8°C<br>DT1 = 10 K | TA | - | - |
| Application 2<br>Room temp. +6°C<br>DT1 = 6 K | - | MUC | SKB |
| Application 3<br>Room temp. +2°C<br>DT1 = 8 K | - | MUC | SKB |
| Application 4<br>Room temp. +0°C<br>DT1 = 8 K | - | MUC<br>+ defrost E1K | SKB<br>+ defrost E1K |
| Application 5<br>Room temp. -20°C<br>DT1 = 7 K | - | LUC | - |

## Certifications

PED 97/23/CE

## Condensing unit dimensions

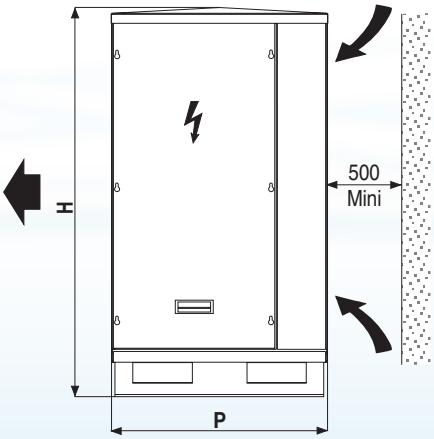


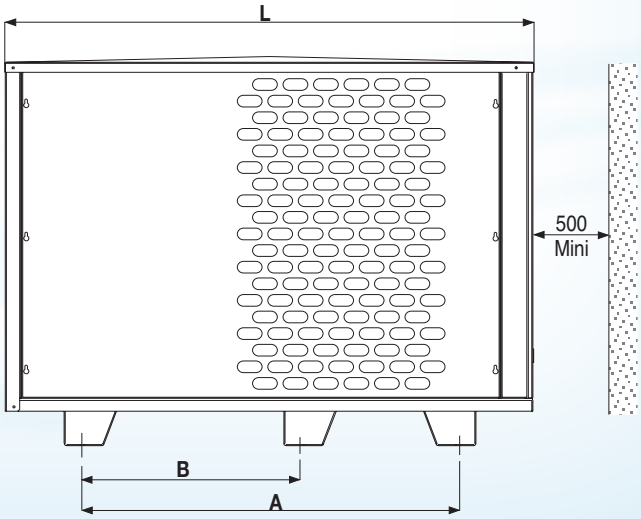

## MAXI

**Chill range**

| Standard | | MAXI SH | P23A | P26A | P33A | P41A | P53A | P66A | P83A | - |
|---|---|---|---|---|---|---|---|---|---|---|
| Capacity R404A (1) | | kW | 3.30 | 4.12 | 5.25 | 6.50 | 8.41 | 10.58 | 12.63 | - |
| Input power (1) | | kW | 2.01 | 2.50 | 2.91 | 3.59 | 4.79 | 6.25 | 8.53 | - |
| Max. input current 400V/3/50Hz | | A max | 5.15 | 7.00 | 7.80 | 10.20 | 13.20 | 15.20 | 19.86 | - |
| **Standard** | | **MAXI Sc** | **P23A** | **P26A** | **P33A** | **P41A** | **P53A** | **P66A** | **P83A** | **P104A** |
| Capacity R404A (1) | | kW | 3.09 | 4.09 | 5.02 | 6.92 | 8.23 | 9.99 | 12.08 | 16.59 |
| Input power (1) | | kW | 2.02 | 2.33 | 2.64 | 3.72 | 4.78 | 5.76 | 7.88 | 10.69 |
| Max. input current 400V/3/50Hz | | A max | 6.45 | 6.20 | 7.90 | 11.40 | 13.40 | 14.00 | 18.00 | 26.00 |
| Fan | Nb x Ø | mm | 1x355 | 1x355 | 2x355 | 2x355 | 2x355 | 2x500 | 2x500 | 2x500 |
| | | 50 Hz | 230V/1 | 230V/1 | 230V/1 | 230V/1 | 230V/1 | 400V/3 | 400V/3 | 400V/3 |
| Air flow | | $m^3/h$ | 1380 | 2200 | 2640 | 4200 | 4200 | 9600 | 11540 | 10310 |
| Rotation speed | | rpm | 1000 | 1500 | 1000 | 1500 | 1500 | 1000 | 1500 | 1500 |
| Liquid volume | | l. | 3 | 3 | 5 | 5 | 5 | 11 | 11 | 11 |
| Dimensions | L | mm | 1190 | 1190 | 1350 | 1350 | 1350 | 1450 | 1450 | 1450 |
| | P | mm | 475 | 475 | 550 | 550 | 550 | 600 | 600 | 600 |
| | H | mm | 810 | 810 | 1060 | 1060 | 1060 | 1470 | 1470 | 1470 |
| | A / B | mm | 805 | 805 | 955 | 955 | 955 | 1049 / 617 | 1049 / 617 | 1049 / 617 |
| Connections | Suction | Ø | 5/8" | 7/8" | 7/8" | 7/8" | 1 1/8" | 1 1/8" | 1 3/8" | 1 3/8" |
| | Liquid | Ø | 3/8" | 3/8" | 1/2" | 1/2" | 1/2" | 5/8" | 5/8" | 5/8" |
| Net weight | | kg | 140 | 140 | 160 | 175 | 175 | 220 | 230 | 230 |

| Oversized | | MAXI SH | P23AS | P26AS | P33AS | P41AS | P53AS | P66AS | P83AS | - |
|---|---|---|---|---|---|---|---|---|---|---|
| Capacity R404A (1) | | kW | 2.82 | 3.43 | 4.40 | 5.08 | 7.34 | 8.49 | 10.71 | - |
| Input power (1) | | kW | 2.26 | 2.66 | 3.36 | 3.91 | 6.60 | 7.67 | 9.02 | - |
| Max. input current 400V/3/50Hz | | A max | 5.90 | 6.70 | 9.30 | 10.20 | 14.76 | 17.76 | 19.86 | - |
| **Oversized** | | **MAXI Sc** | **P23AS** | **P26AS** | **P33AS** | **P41AS** | **P53AS** | **P66AS** | **P83AS** | **P104AS** |
| Capacity R404A (1) | | kW | 2.53 | 3.46 | 4.27 | 5.47 | 7.18 | 8.12 | 10.40 | 14.05 |
| Input power (1) | | kW | 2.57 | 2.70 | 3.38 | 4.63 | 6.99 | 7.83 | 8.53 | 11.83 |
| Max. input current 400V/3/50Hz | | A max | 7.20 | 5.90 | 9.40 | 11.40 | 14.96 | 15.96 | 19.96 | 25.96 |
| Fan | Nb x Ø | mm | 1 x 355 | 2 x 355 | 2 x 355 | 2 x 355 | 2 x 500 | 2 x 500 | 2 x 500 | 2 x 500 |
| | | 50 Hz | 230V/1 | 230V/1 | 230V/1 | 230V/1 | 230V/1 | 400V/3 | 400V/3 | 400V/3 |
| Air flow | | $m^3/h$ | 2200 | 2640 | 4200 | 4200 | 11540 | 11540 | 10315 | 12400 |
| Rotation speed | | rpm | 1500 | 1000 | 1500 | 1500 | 1500 | 1500 | 1500 | 1500 |
| Liquid volume | | l. | 3 | 3 | 5 | 5 | 5 | 11 | 11 | 11 |
| Dimensions | L | mm | 1190 | 1350 | 1350 | 1350 | 1450 | 1450 | 1450 | 1750 |
| | P | mm | 475 | 550 | 550 | 550 | 600 | 600 | 600 | 600 |
| | H | mm | 810 | 1060 | 1060 | 1060 | 1470 | 1470 | 1470 | 1470 |
| | A / B | mm | 805 | 955 | 955 | 955 | 1049 / 617 | 1049 / 617 | 1049 / 617 | 1349 |
| Connections | Suction | Ø | 5/8" | 7/8" | 7/8" | 7/8" | 1" 1/8 | 1" 1/8 | 1" 3/8 | 1" 3/8 |
| | Liquid | Ø | 3/8" | 3/8" | 1/2" | 1/2" | 1/2" | 5/8" | 5/8" | 5/8" |
| Net weight | | kg | 140 | 155 | 160 | 175 | 200 | 220 | 240 | 250 |

| Low noise level | | MAXI Sc | P23ALN | P26ALN | P33ALN | P41ALN | P53ALN | P66ALN | P83ALN | P104ALN |
|---|---|---|---|---|---|---|---|---|---|---|
| Capacity R404A (1) | | kW | 3.09 | 4.18 | 5.02 | 6.90 | 8.46 | 9.57 | 12.09 | 16.67 |
| Input power (1) | | kW | 2.02 | 2.23 | 2.64 | 3.65 | 4.55 | 5.30 | 6.24 | 9.55 |
| Max. input current 400V/3/50Hz | | A max | 6.45 | 5.80 | 7.90 | 9.84 | 11.84 | 12.84 | 17.80 | 26.80 |
| Acoustic LP à 10m (2) | | dB(A) | 24 | 24 | 34 | 36 | 36 | 37 | 35 | 42 |
| Fan | Nb x Ø | mm | 1 x 355 | 2 x 355 | 2 x 355 | 2 x 500 | 2 x 500 | 2 x 500 | 4 x 355 | 4 x 355 |
| | | 50 Hz | 230V/1 | 230V/1 | 230V/1 | 230V/1 | 230V/1 | 400V/3 | 400V/3 | 400V/3 |
| Air flow | | $m^3/h$ | 1380 | 2060 | 2640 | 5115 | 4345 | 4345 | 5520 | 8800 |
| Rotation speed | | rpm | 1000 | 750 | 750 | 750 | 750 | 750 | 1000 | 1500 |
| Liquid volume | | l. | 3 | 3 | 5 | 5 | 5 | 11 | 11 | 11 |
| Dimensions | L | mm | 1190 | 1350 | 1350 | 1450 | 1450 | 1450 | 1750 | 1750 |
| | P | mm | 475 | 550 | 550 | 600 | 600 | 600 | 600 | 600 |
| | H | mm | 810 | 1060 | 1060 | 1470 | 1470 | 1470 | 1470 | 1470 |
| | A / B | mm | 805 | 955 | 955 | 1049 / 617 | 1049 / 617 | 1049 / 617 | 1349 / 800 | 1349 / 800 |
| Connections | Suction | Ø | 5/8" | 7/8" | 7/8" | 7/8" | 1" 1/8 | 1" 1/8 | 1" 3/8 | 1" 3/8 |
| | Liquid | Ø | 3/8" | 3/8" | 1/2" | 1/2" | 1/2" | 5/8" | 5/8" | 5/8" |
| Net weight | | kg | 140 | 155 | 160 | 200 | 210 | 230 | 250 | 250 |

* **A** *and* **ALN**: *Evaporation temperature -10°C / Ambient temperature +32°C - Superheating: 10K - Subcooling: 3K.*
* **AS**: *Evaporation temperature -10°C / Ambient temperature +42°C - Superheating: 10K - Subcooling: 3K.*

*(1)* **SH**: *Semi-hermetic compressor -* **Sc**: *Scroll compressor*
*(2) Sound pressure in dB(A) measured at 10 m, line of sight in a reflective surface, in accordance with pre-standard EN 13487 (parallelepiped reference surface).*
*(3) Motor Ø 355: 230V/1/50 Hz - Motor Ø 500: 400V/3/50 Hz*

| CAC* | PRG | RPC | VFA | SPE | GPC | ECC |
|---|---|---|---|---|---|---|
| O | O | O | O | O | O | O |

* **CAC** *: MAXI Sc only.*

## MAXI

**Low temperature range**

| Standard | | MAXI SH | N24A | N34A | N42A | N73A | - |
|---|---|---|---|---|---|---|---|
| Capacity R404A (1) | | kW | 1.59 | 2.26 | 2.94 | 4.33 | - |
| Input power (1) | | kW | 1.71 | 2.37 | 2.87 | 4.35 | - |
| Max. input current 400V/3/50Hz | | A max | 7.35 | 10.40 | 11.60 | 18.30 | - |
| **Standard** | | **MAXI Sc** | **-** | **N34A** | **N42A** | **N73A** | **N84A** |
| Capacity R404A (1) | | kW | - | 1.75 | 2.98 | 4.41 | 5.63 |
| Input power (1) | | kW | - | 2.01 | 3.09 | 5.16 | 7.54 |
| Max. input current 400V/3/50Hz | | A max | - | 8.20 | 11.90 | 19.40 | 25.00 |
| Fan | Nb x Ø | mm | 1x355 | 1x355 | 2x355 | 2x355 | 2x500 |
| | | 50 Hz | 230V/1 | 230V/1 | 230V/1 | 230V/1 | 400V/3 |
| Air flow | | $m^3/h$ | 1380 | 2200 | 2640 | 4200 | 9600 |
| Rotation speed | | rpm | 1000 | 1500 | 1000 | 1500 | 1000 |
| Liquid volume | | l. | 3 | 3 | 3 | 5 | 5 |
| Dimensions | L | mm | 1190 | 1190 | 1350 | 1350 | 1450 |
| | P | mm | 475 | 475 | 550 | 550 | 600 |
| | H | mm | 810 | 810 | 1060 | 1060 | 1470 |
| | A / B | mm | 805 | 805 | 955 | 955 | 1049 / 617 |
| Connections | Suction | Ø | 7/8" | 7/8" | 1 1/8" | 1 1/8" | 1 3/8" |
| | Liquid | Ø | 3/8" | 3/8" | 3/8" | 1/2" | 5/8" |
| Net weight | | kg | 140 | 140 | 175 | 175 | 230 |

| Oversized | | MAXI SH | N24AS | N34AS | N42AS | N73AS | - |
|---|---|---|---|---|---|---|---|
| Capacity R404A (1) | | kW | 1.19 | 1.73 | 2.23 | 3.37 | - |
| Input power (1) | | kW | 1.79 | 2.32 | 3.16 | 5.03 | - |
| Max. input current 400V/3/50Hz | | A max | 8.10 | 10.10 | 13.10 | 17.90 | - |
| **Oversized** | | **MAXI Sc** | **-** | **N34AS** | **N42AS** | **N73AS** | **N84AS** |
| Capacity R404A (1) | | kW | - | 1.46 | 2.52 | 3.67 | 4.78 |
| Input power (1) | | kW | - | 2.32 | 3.88 | 6.37 | 9.81 |
| Max. input current 400V/3/50Hz | | A max | - | 7.90 | 13.40 | 19.00 | 26.96 |
| Fan | Nb x Ø | mm | 1 x 355 | 2 x 355 | 2 x 355 | 2 x 500 | 2 x 500 |
| | | 50 Hz | 230V/1 | 230V/1 | 230V/1 | 230V/1 | 400V/3 |
| Air flow | | $m^3/h$ | 2200 | 2640 | 4200 | 9600 | 11540 |
| Rotation speed | | rpm | 1500 | 1000 | 1500 | 1000 | 1500 |
| Liquid volume | | l. | 5 | 5 | 5 | 5 | 5 |
| Dimensions | L | mm | 1190 | 1350 | 1350 | 1450 | 1450 |
| | P | mm | 475 | 550 | 550 | 600 | 600 |
| | H | mm | 810 | 1060 | 1060 | 1470 | 1470 |
| | A / B | mm | 805 | 955 | 955 | 1049 / 617 | 1049 / 617 |
| Connections | Suction | Ø | 7/8" | 7/8" | 1" 1/8 | 1" 1/8 | 1" 3/8 |
| | Liquid | Ø | 3/8" | 3/8" | 3/8" | 1/2" | 1/2" |
| Net weight | | kg | 140 | 150 | 175 | 185 | 240 |

| Low noise level | | MAXI Sc | N24ALN | N34ALN | N42ALN | N73ALN | N84ALN |
|---|---|---|---|---|---|---|---|
| Capacity R404A (1) | | kW | - | 1.78 | 2.98 | 4.40 | 5.41 |
| Input power (1) | | kW | - | 1.93 | 3.09 | 5.09 | 7.07 |
| Max. input current 400V/3/50Hz | | A max | - | 7.80 | 11.90 | 17.84 | 23.84 |
| Acoustic LP à 10m (2) | | dB(A) | - | 25 | 30 | 37 | 38 |
| Fan | Nb x Ø | mm | 1 x 355 | 2 x 355 | 2 x 355 | 2 x 500 | 2 x 500 |
| | | 50 Hz | 230V/1 | 230V/1 | 230V/1 | 230V/1 | 400V/3 |
| Air flow | | $m^3/h$ | 1380 | 2060 | 2640 | 5115 | 4345 |
| Rotation speed | | rpm | 1000 | 750 | 1000 | 750 | 750 |
| Liquid volume | | l. | 5 | 5 | 5 | 5 | 5 |
| Dimensions | L | mm | 1190 | 1350 | 1350 | 1450 | 1450 |
| | P | mm | 475 | 550 | 550 | 600 | 600 |
| | H | mm | 810 | 1060 | 1060 | 1470 | 1470 |
| | A / B | mm | 805 | 955 | 955 | 1049 / 617 | 1049 / 617 |
| Connections | Suction | Ø | 7/8" | 7/8" | 1" 1/8 | 1" 1/8 | 1" 3/8 |
| | Liquid | Ø | 3/8" | 3/8" | 3/8" | 1/2" | 5/8" |
| Net weight | | kg | 140 | 150 | 175 | 185 | 250 |

* **A** *and* **ALN**: *Evaporation temperature -35°C / Ambient temperature +32°C - Superheating: 10K - Subcooling: 3K.*
* **AS**: *Evaporation temperature -35°C / Ambient temperature +42°C - Superheating: 10K - Subcooling: 3K.*

*(1)* **SH**: *Semi-hermetic compressor -* **Sc**: *Scroll compressor*
*(2) Sound pressure in dB(A) measured at 10 m, line of sight in a reflective surface, in accordance with pre-standard EN 13487 (parallelepiped reference surface).*
*(3) Motor Ø 355: 230V/1/50 Hz - Motor Ø 500: 400V/3/50 Hz*

| CAC* | PRG | RPC | VFA | SPE | GPC | ECC |
|---|---|---|---|---|---|---|
| O | O | O | O | O | O | O |

* **CAC** *: MAXI Sc only.*

## Condensing unit dimensions

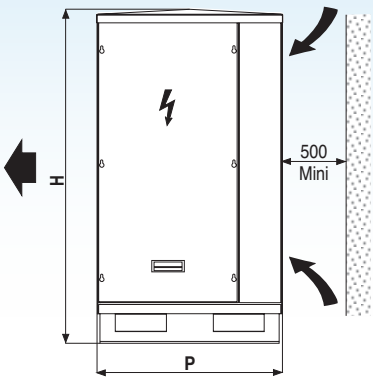


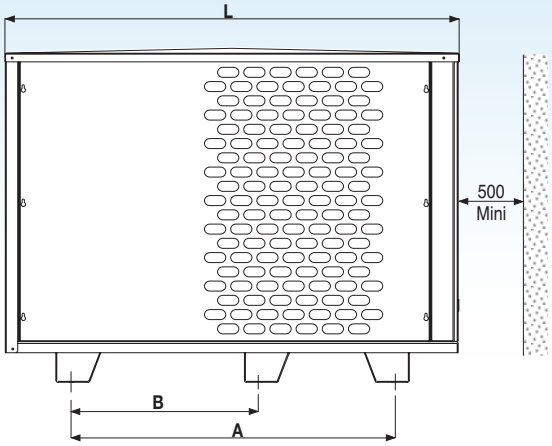


## Unit cooler dimensions

### TA

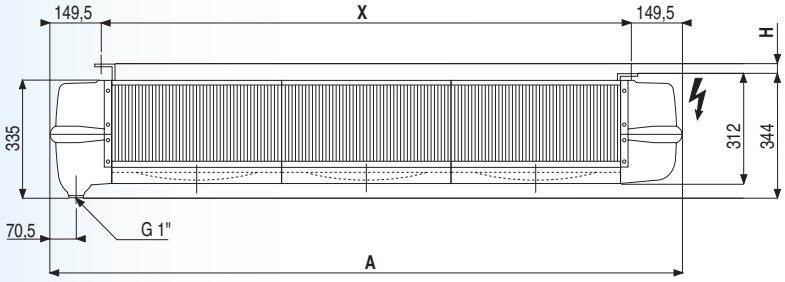


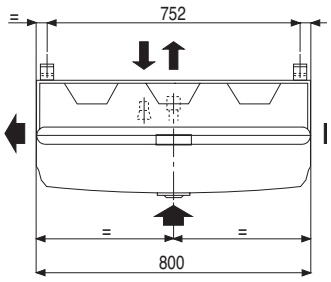


### MUC/LUC

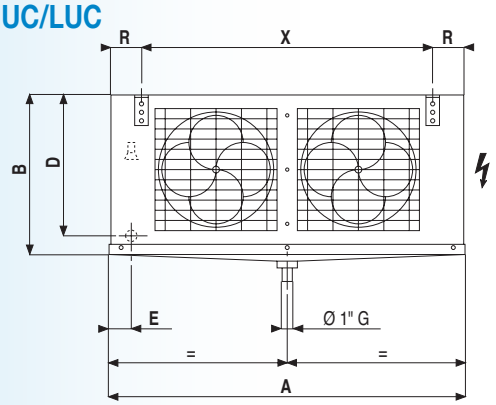


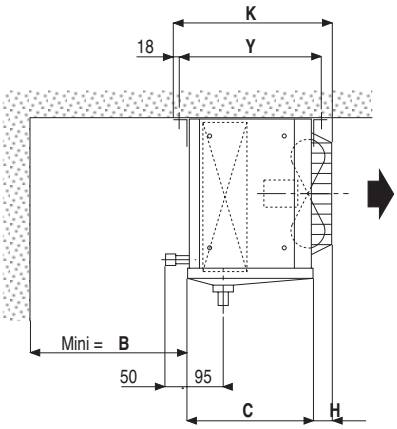


### SKB

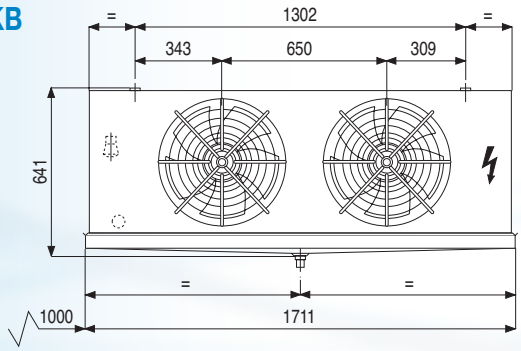


S 12 R

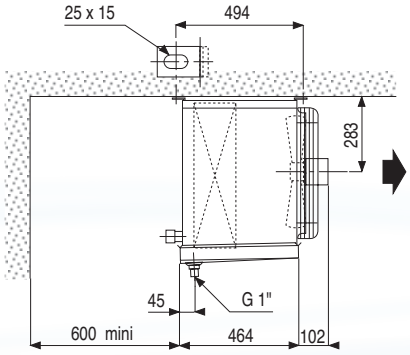


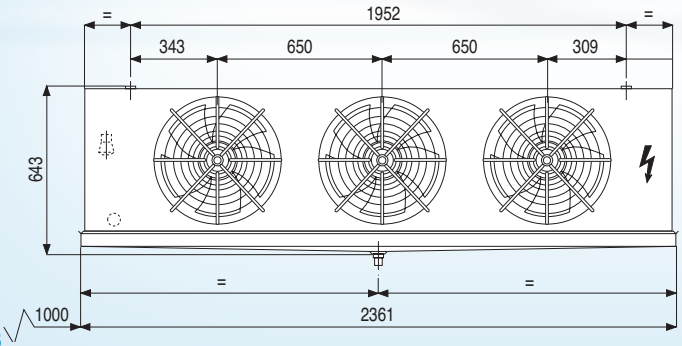


S 16 R
S 19 R
S 14 L

## Control unit dimensions

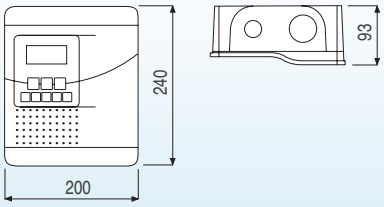

## MAXIBOREAL - Standard

$t_i$ = +8°C - DT1 = 10 K

| Split system +32°C MAXIBOREAL SH ... | | P23A T2R6P | P26A T2R6P | P33A T3R6P | P41A T5R6P | P53A T6R6P | P66A T7R6P | P83A T7R6P | - - |
|---|---|---|---|---|---|---|---|---|---|
| Capacity R404A (1) | kW | 4,29 | 5,62 | 7,14 | 8,70 | 10,85 | 13,99 | 16,12 | - |
| Input power (1) | kW | 2,44 | 3,02 | 3,49 | 4,24 | 5,63 | 7,53 | 9,62 | - |
| Max. input current 400V/3/50Hz | A | 5,15 | 7,0 | 7,8 | 10,2 | 13,2 | 15,2 | 19,86 | - |
| Room volume (indication) | $m^3$ | 45 | 55 | 75 | 110 | 130 | 200 | 230 | - |

| Split system +32°C MAXIBOREAL Sc ... | | P23A T2R6P | P26A T2R6P | P33A T3R6P | P41A T5R6P | P53A T6R6P | P66A T7R6P | P83A T7R6P | P104A 2xT5R6P |
|---|---|---|---|---|---|---|---|---|---|
| Capacity R404A (1) | kW | 4,10 | 5,36 | 6,66 | 9,18 | 10,78 | 13,19 | 15,43 | 22,02 |
| Input power (1) | kW | 2,24 | 2,61 | 2,92 | 4,09 | 5,26 | 6,36 | 8,41 | 11,63 |
| Max. input current 400V/3/50Hz | A | 5,2 | 6,2 | 7,9 | 11,4 | 13,4 | 14,0 | 17,98 | 25,96 |
| Room volume (indication) | $m^3$ | 45 | 55 | 75 | 110 | 130 | 200 | 230 | 300 |

| Condensing unit | | | P23A | P26A | P33A | P41A | P53A | P66A | P83A | P104A |
|---|---|---|---|---|---|---|---|---|---|---|
| Fan | Nb x Ø | mm | 1x355 | 1x355 | 2x355 | 2x355 | 2x355 | 2x500 | 2x500 | 2x500 |
| | | 50 Hz | 230V/1 | 230V/1 | 230V/1 | 230V/1 | 230V/1 | 400V/3 | 400V/3 | 400V/3 |
| Air flow | | $m^3/h$ | 1380 | 2200 | 2640 | 4200 | 4200 | 9600 | 11540 | 10310 |
| Rotation speed | | rpm | 1000 | 1500 | 1000 | 1500 | 1500 | 1000 | 1500 | 1500 |
| Liquid volume | | l. | 3 | 3 | 5 | 5 | 5 | 11 | 11 | 11 |
| Dimensions | L | mm | 1190 | 1190 | 1350 | 1350 | 1350 | 1450 | 1450 | 1450 |
| | P | mm | 475 | 475 | 550 | 550 | 550 | 600 | 600 | 600 |
| | H | mm | 810 | 810 | 1060 | 1060 | 1060 | 1470 | 1470 | 1470 |
| | A | mm | 805 | 805 | 955 | 955 | 955 | 1049 | 1049 | 1049 |
| | B | mm | - | - | - | - | - | 617 | 617 | 617 |
| Connections | Suction | Ø | 5/8" | 7/8" | 7/8" | 7/8" | 1 1/8" | 1 1/8" | 1 3/8" | 1 3/8" |
| | Liquid | Ø | 3/8" | 3/8" | 1/2" | 1/2" | 1/2" | 5/8" | 5/8" | 5/8" |
| Net weight | | kg | 140 | 140 | 160 | 175 | 175 | 220 | 230 | 230 |

| Unit cooler - 3,63 mm | | | T2R6P | T2R6P | T3R6P | T5R6P | T6R6P | T7R6P | T7R6P | 2xT5R6P |
|---|---|---|---|---|---|---|---|---|---|---|
| Surface | | $m^2$ | 15,23 | 22,84 | 30,43 | 34,26 | 57,10 | 60,91 | 60,91 | 34,26 (x2) |
| Circuit volume | | $dm^3$ | 2,23 | 3,35 | 4,46 | 5,02 | 8,36 | 8,92 | 8,92 | 5,02 (x2) |
| Fan 230V/1/50-60Hz 1,000 rpm | Air flow | $m^3/h$ | 2910 | 2910 | 2750 | 4125 | 3765 | 5230 | 5230 | 4125 (x2) |
| | Air throw | m | 2 x 7 | 2 x 7 | 2 x 7 | 2 x 7 | 2 x 6 | 2 x 7 | 2 x 7 | 2 x 7 (x2) |
| | Nb x Ø mm | mm | 2 x 350 | 2 x 350 | 2 x 350 | 3 x 350 | 3 x 350 | 4 x 350 | 4 x 350 | 3 x 350 (x2) |
| | | W Total | 240 | 240 | 240 | 360 | 360 | 480 | 480 | 360 (x2) |
| | | A Total | 1,20 | 1,20 | 1,20 | 1,80 | 1,80 | 2,40 | 2,40 | 1,80 (x2) |
| Dimensions | A | mm | 1366 | 1366 | 1366 | 1866 | 1866 | 2366 | 2366 | 1866 (x2) |
| | H | mm | 17,5 | 17,5 | 17,5 | 35 | 35 | 35 | 35 | 35 (x2) |
| | X | mm | 1060 | 1060 | 1060 | 1560 | 1560 | 2060 | 2060 | 1560 (x2) |
| Connections | Inlet | Ø (2) | D 5/8" | D 5/8" | D 5/8" | D 5/8" | D 5/8" | D 5/8" | D 5/8" | D 5/8" (x2) |
| | Outlet | Ø ODF (3) | 5/8" | 5/8" | 7/8" | 7/8" | 11/8" | 11/8" | 11/8" | 7/8" (x2) |
| Net weight | | kg | 25 | 25 | 28 | 36 | 45 | 55 | 55 | 36 (x2) |

*(1) Superheat 10 K - Subcooling 3 K. (2) Liquid distributor: male to be brazed. (3) ODF: female sweat type connection.*

| CAC* | PRG | RPC | VFA | SPE | GPC | ECC |
|---|---|---|---|---|---|---|
| O | - | - | O | - | O | O |

* **CAC** : *MAXI Sc only.*

## MAXIBOREAL - Standard

$t_i$ = +6°C - DT1 = 6 K

| Split system +32°C MAXIBOREAL SH ... | | P23A M420R | P26A M520R | P33A M620R | P41A M781R | P53A S10R | P66A S12R | P83A S16R | - - |
|---|---|---|---|---|---|---|---|---|---|
| Capacity R404A (1) | kW | 4,56 | 5,98 | 7,63 | 9,30 | 11,55 | 14,92 | 17,16 | - |
| Input power (1) | kW | 2,62 | 3,36 | 3,85 | 4,79 | 6,23 | 8,44 | 11,11 | - |
| Max. input current 400V/3/50Hz | A | 5,15 | 7,0 | 7,8 | 10,2 | 13,2 | 15,2 | 19,86 | - |
| Room volume (indication) | $m^3$ | 45 | 75 | 100 | 130 | 170 | 210 | 270 | - |

| Split system +32°C MAXIBOREAL Sc ... | | P23A M420R | P26A M520R | P33A M620R | P41A M781R | P53A S10R | P66A S12R | P83A S16R | P104A S19R |
|---|---|---|---|---|---|---|---|---|---|
| Capacity R404A (1) | kW | 4,37 | 5,72 | 7,10 | 9,80 | 11,49 | 14,06 | 16,44 | 23,39 |
| Input power (1) | kW | 2,35 | 2,88 | 3,21 | 4,57 | 5,77 | 7,13 | 9,74 | 12,86 |
| Max. input current 400V/3/50Hz | A | 5,2 | 6,2 | 7,9 | 11,4 | 13,4 | 14,0 | 17,98 | 25,96 |
| Room volume (indication) | $m^3$ | 45 | 75 | 100 | 130 | 170 | 210 | 270 | 360 |

| Condensing unit | | | P23A | P26A | P33A | P41A | P53A | P66A | P83A | P104A |
|---|---|---|---|---|---|---|---|---|---|---|
| Fan | Nb x Ø | mm | 1x355 | 1x355 | 2x355 | 2x355 | 2x355 | 2x500 | 2x500 | 2x500 |
| | | 50 Hz | 230V/1 | 230V/1 | 230V/1 | 230V/1 | 230V/1 | 400V/3 | 400V/3 | 400V/3 |
| Air flow | | $m^3/h$ | 1380 | 2200 | 2640 | 4200 | 4200 | 9600 | 11540 | 10310 |
| Rotation speed | | rpm | 1000 | 1500 | 1000 | 1500 | 1500 | 1000 | 1500 | 1500 |
| Liquid volume | | l. | 3 | 3 | 5 | 5 | 5 | 11 | 11 | 11 |
| Dimensions | L | mm | 1190 | 1190 | 1350 | 1350 | 1350 | 1450 | 1450 | 1450 |
| | P | mm | 475 | 475 | 550 | 550 | 550 | 600 | 600 | 600 |
| | H | mm | 810 | 810 | 1060 | 1060 | 1060 | 1470 | 1470 | 1470 |
| | A | mm | 805 | 805 | 955 | 955 | 955 | 1049 | 1049 | 1049 |
| | B | mm | - | - | - | - | - | 617 | 617 | 617 |
| Connections | Suction | Ø | 5/8" | 7/8" | 7/8" | 7/8" | 1 1/8" | 1 1/8" | 1 3/8" | 1 3/8" |
| | Liquid | Ø | 3/8" | 3/8" | 1/2" | 1/2" | 1/2" | 5/8" | 5/8" | 5/8" |
| Net weight | | kg | 140 | 140 | 160 | 175 | 175 | 220 | 230 | 230 |

| Unit cooler - 4,23 mm | | | M420R | M520R | M620R | M781R | S10R | S12R | S16R | S19R |
|---|---|---|---|---|---|---|---|---|---|---|
| Surface | | $m^2$ | 18,2 | 21,4 | 25,8 | 38,6 | 57 | 57 | 57 | 86 |
| Circuit volume | | $dm^3$ | 3,5 | 4,0 | 4,8 | 7,2 | 9,69 | 9,69 | 9,58 | 14,36 |
| Fan 1,000 rpm | Air flow | $m^3/h$ | 2560 | 3250 | 3700 | 7900 | 8600 | 7600 | 12300 | 1140 |
| | Air throw | m | 12 | 12 | 12 | 30 | 21 | 18 | 20 | 20 |
| | Nb x Ø mm | mm | 2 x 300 | 3 x 300 | 3 x 300 | 2 x 450 | 2 x 450 | 2 x 450 | 3 x 450 | 3 x 450 |
| | | 50 Hz | 230V/1 | 230V/1 | 230V/1 | 400V/3 | 400V/3 | 400V/3 | 400V/3 | 400V/3 |
| | | W Total | 290 | 435 | 435 | 2 x 360 | 2 x 499 | 2 x 540 | 3 x 540 | 3 x 540 |
| | | A Total | 1,30 | 1,95 | 1,95 | 2 x 1,0 | 2 x 1,0 | 2 x 1,0 | 3 x 1,0 | 3 x 1,0 |
| Dimensions | A | mm | 1220 | 1347 | 1650 | 1650 | - | - | - | - |
| | B | mm | 400 | 464 | 400 | 590 | - | - | - | - |
| | C | mm | 365 | 365 | 365 | 482 | - | - | - | - |
| | D | mm | 355 | 419 | 352 | 543 | - | - | - | - |
| | E | mm | 89 | 89 | 110 | 110 | - | - | - | - |
| | H | mm | 53 | 53 | 53 | 78 | - | - | - | - |
| | K | mm | 456 | 456 | 456 | 606 | - | - | - | - |
| | R | mm | 122 | 122 | 147 | 147 | - | - | - | - |
| | X | mm | 976 | 976 | 1356 | 1356 | - | - | - | - |
| | Y | mm | 412 | 412 | 412 | 536 | - | - | - | - |
| Connections | Inlet | Ø (2) | D1/2" | D1/2" | D1/2" | D1 1/8" | D 1 1/8" | D1 1/8" | D1 1/8" | D1 1/8" |
| | Outlet | Ø ODF (3) | 3/4" | 3/4" | 7/8" | 1 3/8" | 1 3/8" | 1 3/8" | 1 5/8" | 1 5/8" |
| Net weight | | kg | 33 | 44 | 45 | 73 | 100 | 102 | 118 | 135 |

*(1) Superheat 10 K - Subcooling 3 K. (2) Liquid distributor: male to be brazed. (3) ODF: female sweat type connection.*

| CAC* | PRG | RPC | VFA | SPE | GPC | ECC |
|---|---|---|---|---|---|---|
| O | - | - | O | - | O | O |



* **CAC** : *MAXI Sc only.*

## MAXIBOREAL - Standard

$t_i$ = +2°C - DT1 = 8 K

| Split system +32°C MAXIBOREAL SH ... | | P23A M315L | P26A M415L | P33A M515L | P41A M615L | P53A M776L | P66A M776L | P83A S11L | - - |
|---|---|---|---|---|---|---|---|---|---|
| Capacity R404A (1) | kW | 3,77 | 4,91 | 6,23 | 7,54 | 9,48 | 12,26 | 14,15 | - |
| Input power (1) | kW | 2,38 | 2,93 | 3,52 | 4,17 | 5,73 | 7,45 | 10,08 | - |
| Max. input current 400V/3/50Hz | A | 5,15 | 7,0 | 7,8 | 10,2 | 13,2 | 15,2 | 19,86 | - |
| Room volume (indication) | $m^3$ | 35 | 40 | 55 | 70 | 85 | 120 | 140 | - |

| Split system +32°C MAXIBOREAL Sc ... | | P23A M315L | P26A M415L | P33A M515L | P41A M615L | P53A M776L | P66A M776L | P83A S11L | P104A S14L |
|---|---|---|---|---|---|---|---|---|---|
| Capacity R404A (1) | kW | 3,59 | 4,70 | 5,82 | 8,00 | 9,45 | 11,54 | 13,5 | 19,42 |
| Input power (1) | kW | 2,30 | 2,65 | 3,11 | 4,17 | 5,55 | 6,59 | 9,21 | 12,33 |
| Max. input current 400V/3/50Hz | A | 5,2 | 6,2 | 7,9 | 11,4 | 13,4 | 14,0 | 17,98 | 25,96 |
| Room volume (indication) | $m^3$ | 35 | 40 | 55 | 70 | 85 | 120 | 140 | 180 |

| Condensing unit | | | P23A | P26A | P33A | P41A | P53A | P66A | P83A | P104A |
|---|---|---|---|---|---|---|---|---|---|---|
| Fan | Nb x Ø | mm | 1x355 | 1x355 | 2x355 | 2x355 | 2x355 | 2x500 | 2x500 | 2x500 |
| | | 50 Hz | 230V/1 | 230V/1 | 230V/1 | 230V/1 | 230V/1 | 400V/3 | 400V/3 | 400V/3 |
| Air flow | | $m^3/h$ | 1380 | 2200 | 2640 | 4200 | 4200 | 9600 | 11540 | 10310 |
| Rotation speed | | rpm | 1000 | 1500 | 1000 | 1500 | 1500 | 1000 | 1500 | 1500 |
| Liquid volume | | l. | 3 | 3 | 5 | 5 | 5 | 11 | 11 | 11 |
| Dimensions | L | mm | 1190 | 1190 | 1350 | 1350 | 1350 | 1450 | 1450 | 1450 |
| | P | mm | 475 | 475 | 550 | 550 | 550 | 600 | 600 | 600 |
| | H | mm | 810 | 810 | 1060 | 1060 | 1060 | 1470 | 1470 | 1470 |
| | A | mm | 805 | 805 | 955 | 955 | 955 | 1049 | 1049 | 1049 |
| | B | mm | - | - | - | - | - | 617 | 617 | 617 |
| Connections | Suction | Ø | 5/8" | 7/8" | 7/8" | 7/8" | 1 1/8" | 1 1/8" | 1 3/8" | 1 3/8" |
| | Liquid | Ø | 3/8" | 3/8" | 1/2" | 1/2" | 1/2" | 5/8" | 5/8" | 5/8" |
| Net weight | | kg | 140 | 140 | 160 | 175 | 175 | 220 | 230 | 230 |

| Unit cooler - 6,35 mm | | | M315L | M415L | M515L | M615L | M776L | M776L | S11L | S14L |
|---|---|---|---|---|---|---|---|---|---|---|
| Surface | | $m^2$ | 11,66 | 15,98 | 18,64 | 22,43 | 33,65 | 33,65 | 39,0 | 39,0 |
| Circuit volume | | $dm^3$ | 3,3 | 4,4 | 5,0 | 6,0 | 9,0 | 9,0 | 9,69 | 9,58 |
| Fan 1,000 rpm | Air flow | $m^3/h$ | 2080 | 2560 | 3250 | 3690 | 7890 | 7890 | 8300 | 12900 |
| | Air throw | m | 12 | 12 | 12 | 12 | 30 | 30 | 21 | 20 |
| | Nb x Ø mm | mm | 2 x 300 | 2 x 300 | 3 x 300 | 3 x 300 | 2 x 450 | 2 x 450 | 2 x 450 | 3 x 450 |
| | | 50 Hz | 230V/1 | 230V/1 | 230V/1 | 230V/1 | 400V/3 | 400V/3 | 400V/3 | 400V/3 |
| | | W Total | 290 | 290 | 435 | 435 | 2 x 360 | 2 x 360 | 2 x 499 | 3 x 540 |
| | | A Total | 1,30 | 1,30 | 1,95 | 1,95 | 2 x 1,0 | 2 x 1,0 | 2 x 1 | 3 x 1,0 |
| Dimensions | A | mm | 966 | 1220 | 1347 | 1650 | 1650 | 1650 | - | - |
| | B | mm | 400 | 400 | 464 | 400 | 590 | 590 | - | - |
| | C | mm | 365 | 365 | 365 | 365 | 482 | 482 | - | - |
| | D | mm | 355 | 355 | 419 | 352 | 543 | 543 | - | - |
| | E | mm | 89 | 89 | 89 | 110 | 110 | 110 | - | - |
| | H | mm | 53 | 53 | 53 | 53 | 78 | 78 | - | - |
| | K | mm | 456 | 456 | 456 | 456 | 606 | 606 | - | - |
| | R | mm | 122 | 122 | 122 | 147 | 147 | 147 | - | - |
| | X | mm | 722 | 976 | 976 | 1356 | 1356 | 1356 | - | - |
| | Y | mm | 412 | 412 | 412 | 412 | 536 | 536 | - | - |
| Connections | Inlet | Ø (2) | D1/2" | D1/2" | D1/2" | D1/2" | D 1 1/8'' | D 1 1/8'' | D 1 1/8" | D1 1/8" |
| | Outlet | Ø ODF (3) | 5/8" | 3/4" | 3/4" | 7/8" | 1 1/8" | 1 1/8" | 1 3/8" | 1 3/8" |
| Net weight | | kg | 28 | 33 | 44 | 45 | 73 | 73 | 100 | 118 |

*(1) Superheat 10 K - Subcooling 3 K. (2) Liquid distributor: male to be brazed. (3) ODF: female sweat type connection.*

| CAC* | PRG | RPC | VFA | SPE | GPC | ECC |
|---|---|---|---|---|---|---|
| O | - | - | O | - | O | O |

* **CAC** : *MAXI Sc only.*

## MAXIBOREAL - Standard

$t_i$ = 0°C - DT1 = 8 K

| Split system +32°C MAXIBOREAL SH ... | | P23A M285R | P26A M320R | P33A M520R | P41A M620R | P53A M781R | P66A M781R | P83A S10R | - - |
|---|---|---|---|---|---|---|---|---|---|
| Capacity R404A (1) | kW | 3,52 | 4,58 | 5,80 | 7,00 | 8,85 | 11,43 | 13,22 | - |
| Input power (1) | kW | 2,30 | 2,83 | 3,42 | 4,06 | 5,56 | 7,24 | 9,20 | - |
| Max. input current 400V/3/50Hz | A | 5,15 | 7,0 | 7,8 | 10,2 | 13,2 | 15,2 | 19,86 | - |
| Room volume (indication) | $m^3$ | 25 | 35 | 50 | 65 | 75 | 110 | 130 | - |

| Split system +32°C MAXIBOREAL Sc ... | | P23A M285R | P26A M320R | P33A M520R | P41A M620R | P53A M781R | P66A M781R | P83A S10R | P104A S12R |
|---|---|---|---|---|---|---|---|---|---|
| Capacity R404A (1) | kW | 3,35 | 4,39 | 5,43 | 7,46 | 8,83 | 10,77 | 12,57 | 18,19 |
| Input power (1) | kW | 2,29 | 2,62 | 3,08 | 4,13 | 5,49 | 6,53 | 8,49 | 11,62 |
| Max. input current 400V/3/50Hz | A | 5,2 | 6,2 | 7,9 | 11,4/ | 13,4 | 14,0 | 17,98 | 25,96 |
| Room volume (indication) | $m^3$ | 25 | 35 | 50 | 65 | 75 | 110 | 130 | 170 |

| Condensing unit | | | P23A | P26A | P33A | P41A | P53A | P66A | P83A | P104A |
|---|---|---|---|---|---|---|---|---|---|---|
| Fan | Nb x Ø | mm | 1x355 | 1x355 | 2x355 | 2x355 | 2x355 | 2x500 | 2x500 | 2x500 |
| | | 50 Hz | 230V/1 | 230V/1 | 230V/1 | 230V/1 | 230V/1 | 400V/3 | 400V/3 | 400V/3 |
| Air flow | | $m^3/h$ | 1380 | 2200 | 2640 | 4200 | 4200 | 9600 | 11540 | 10310 |
| Rotation speed | | rpm | 1000 | 1500 | 1000 | 1500 | 1500 | 1000 | 1500 | 1500 |
| Liquid volume | | l. | 3 | 3 | 5 | 5 | 5 | 11 | 11 | 11 |
| Dimensions | L | mm | 1190 | 1190 | 1350 | 1350 | 1350 | 1450 | 1450 | 1450 |
| | P | mm | 475 | 475 | 550 | 550 | 550 | 600 | 600 | 600 |
| | H | mm | 810 | 810 | 1060 | 1060 | 1060 | 1470 | 1470 | 1470 |
| | A | mm | 805 | 805 | 955 | 955 | 955 | 1049 | 1049 | 1049 |
| | B | mm | - | - | - | - | - | 617 | 617 | 617 |
| Connections | Suction | Ø | 5/8" | 7/8" | 7/8" | 7/8" | 1 1/8" | 1 1/8" | 1 3/8" | 1 3/8" |
| | Liquid | Ø | 3/8" | 3/8" | 1/2" | 1/2" | 1/2" | 5/8" | 5/8" | 5/8" |
| Net weight | | kg | 140 | 140 | 160 | 175 | 175 | 220 | 230 | 230 |

| Unit cooler - 4,23 mm | | | M285R | M320R | M520R | M620R | M781R | M781R | S10R | S12R |
|---|---|---|---|---|---|---|---|---|---|---|
| Surface | | $m^2$ | 10,0 | 13,4 | 21,4 | 25,8 | 38,6 | 38,6 | 57 | 57,0 |
| Circuit volume | | $dm^3$ | 1,9 | 2,6 | 4,0 | 4,8 | 7,2 | 7,2 | 9,69 | 9,69 |
| Fan 1,500 rpm | Air flow | $m^3/h$ | 2340 | 2080 | 3250 | 3700 | 7900 | 7900 | 8600 | 7600 |
| | Air throw | m | 12 | 12 | 12 | 12 | 30 | 30 | 21 | 18 |
| | Nb x Ø mm | mm | 2 x 300 | 2 x 300 | 3 x 300 | 3 x 300 | 2 x 450 | 2 x 450 | 2 x 450 | 2 x 450 |
| | | 50 Hz | 230V/1 | 230V/1 | 230V/1 | 230V/1 | 400V/3 | 400V/3 | 400V/3 | 400V/3 |
| | | W Total | 290 | 290 | 435 | 435 | 2 x 360 | 2 x 360 | 2 x 499 | 2 x 540 |
| | | A Total | 1,3 | 1,3 | 1,95 | 1,95 | 2 x 1,0 | 2 x 1,0 | 2 x 1,0 | 2 x 1,0 |
| **E1K** kit | | 50 Hz | 230V/1 | 230V/1 | 230V/1 | 230V/1 | 400V/3 | 400V/3 | 400V/3 | 400V/3 |
| | | W | 780 | 960 | 1560 | 1860 | 1740 | 1740 | 1500 | 2100 |
| | | A | 3,4 | 4,2 | 6,8 | 8,1 | 2,5 | 2,5 | 2,28 | 3,19 |
| Dimensions | A | mm | 966 | 966 | 1347 | 1650 | 1650 | 1650 | - | - |
| | B | mm | 400 | 400 | 464 | 400 | 590 | 590 | - | - |
| | C | mm | 365 | 365 | 365 | 365 | 482 | 482 | - | - |
| | D | mm | 355 | 355 | 419 | 352 | 543 | 543 | - | - |
| | E | mm | 89 | 89 | 89 | 110 | 110 | 110 | - | - |
| | H | mm | 53 | 53 | 53 | 53 | 78 | 78 | - | - |
| | K | mm | 456 | 456 | 456 | 456 | 606 | 606 | - | - |
| | R | mm | 122 | 122 | 122 | 147 | 147 | 147 | - | - |
| | X | mm | 722 | 722 | 976 | 1356 | 1356 | 1356 | - | - |
| | Y | mm | 412 | 412 | 412 | 412 | 536 | 536 | - | - |
| Connections | Inlet | Ø (2) | D1/2" | D1/2" | D1/2" | D1/2" | D1 1/8" | D1 1/8" | D 1 1/8" | D1 1/8" |
| | Outlet | Ø ODF (3) | 5/8" | 5/8" | 3/4" | 7/8" | 1 3/8" | 1 3/8" | 1 3/8" | 1 3/8" |
| Net weight | | kg | 23 | 28 | 44 | 45 | 73 | 73 | 100 | 102 |

*(1) Superheat 10 K - Subcooling 3 K. (2) Liquid distributor: male to be brazed. (3) ODF: female sweat type connection.*

| CAC* | PRG | RPC | VFA | SPE | GPC | ECC |
|---|---|---|---|---|---|---|
| O | - | - | O | - | O | O |

* **CAC** : *MAXI Sc only.*

## MAXIBOREAL - Standard

$t_i$ = -20°C - DT1 = 7 K

| Split system +32°C MAXIBOREAL SH ... | | N24A L290C | N34A L345C | N42A L545C | N73A L836C | - - |
|---|---|---|---|---|---|---|
| Capacity R404A (1) | kW | 2,48 | 3,44 | 4,37 | 6,44 | - |
| Input power (1) | kW | 2,47 | 3,43 | 4,11 | 6,41 | - |
| Max. input current 400V/3/50Hz | A | 7,35 | 10,4 | 11,6 | 18,3 | - |
| Room volume (indication) | $m^3$ | 25 | 40 | 65 | 120 | - |

| Split system +32°C MAXIBOREAL Sc ... | | - - | N34A L345C | N42A L545C | N73A L836C | N84A L836C |
|---|---|---|---|---|---|---|
| Capacity R404A (1) | kW | - | 2,48 | 4,20 | 6,22 | 8,58 |
| Input power (1) | kW | - | 2,40 | 3,87 | 6,40 | 8,63 |
| Max. input current 400V/3/50Hz | A | - | 8,2 | 11,9 | 19,4 | 25,0 |
| Room volume (indication) | $m^3$ | - | 40 | 65 | 120 | 200 |

| Condensing unit | | | N24A | N34A | N42A | N73A | N84A |
|---|---|---|---|---|---|---|---|
| Fan | Nb x Ø | mm | 1x355 | 1x355 | 2x355 | 2x355 | 2x500 |
| | | 50 Hz | 230V/1 | 230V/1 | 230V/1 | 230V/1 | 400V/3 |
| Air flow | | $m^3/h$ | 1380 | 2200 | 2640 | 4200 | 9600 |
| Rotation speed | | rpm | 1000 | 1500 | 1000 | 1500 | 1000 |
| Liquid volume | | l. | 3 | 3 | 3 | 5 | 5 |
| Dimensions | L | mm | 1190 | 1190 | 1350 | 1350 | 1450 |
| | P | mm | 475 | 475 | 550 | 550 | 600 |
| | H | mm | 810 | 810 | 1060 | 1060 | 1470 |
| | A | mm | 805 | 805 | 955 | 955 | 1049 |
| | B | mm | - | - | - | - | 617 |
| Connections | Suction | Ø | 7/8" | 7/8" | 1 1/8" | 1 1/8" | 1 3/8" |
| | Liquid | Ø | 3/8" | 3/8" | 3/8" | 1/2" | 5/8" |
| Net weight | | kg | 140 | 140 | 175 | 175 | 230 |

| Unit cooler - 6,35 mm | | | L290C | L345C | L545C | L836C | L836C |
|---|---|---|---|---|---|---|---|
| Surface | | $m^2$ | 9,33 | 11,66 | 18,64 | 33,65 | 33,65 |
| Circuit volume | | $dm^3$ | 2,5 | 3,3 | 5,0 | 9,0 | 9,0 |
| Fan 1,500 rpm | Air flow | $m^3/h$ | 2270 | 2080 | 3250 | 7893 | 7893 |
| | Air throw | m | 12 | 12 | 12 | 30 | 30 |
| | Nb x Ø mm | mm | 2 x 300 | 2 x 300 | 3 x 300 | 2 x 450 | 2 x 450 |
| | | 50 Hz | 230V/1 | 230V/1 | 230V/1 | 400V/3 | 400V/3 |
| | | W Total | 290 | 290 | 435 | 2 x 360 | 2 x 360 |
| | | A Total | 1,30 | 1,30 | 1,95 | 2 x 1,0 | 2 x 1,0 |
| Dimensions | A | mm | 966 | 966 | 1347 | 1657 | 1657 |
| | B | mm | 400 | 400 | 464 | 590 | 590 |
| | C | mm | 365 | 365 | 365 | 482 | 482 |
| | D | mm | 355 | 355 | 419 | 538 | 538 |
| | E | mm | 89 | 89 | 89 | 110 | 110 |
| | H | mm | 53 | 53 | 53 | 78 | 78 |
| | K | mm | 456 | 456 | 456 | 606 | 606 |
| | R | mm | 122 | 122 | 122 | 147 | 147 |
| | X | mm | 722 | 722 | 976 | 1356 | 1356 |
| | Y | mm | 412 | 412 | 412 | 536 | 536 |
| Connections | Inlet | Ø (2) | D1/2" | D1/2" | D1/2" | D 1 1/8'' | D 1 1/8'' |
| | Outlet | Ø ODF (3) | 5/8" | 5/8" | 3/4" | 1 3/8" | 1 3/8" |
| Net weight | | kg | 23 | 28 | 44 | 73 | 73 |

*(1) Superheat 10 K - Subcooling 3 K. (2) Liquid distributor: male to be brazed. (3) ODF: female sweat type connection.*

| CAC* | PRG | RPC | VFA | SPE | GPC | ECC |
|---|---|---|---|---|---|---|
| O | - | - | O | - | O | O |

* **CAC** : *MAXI Sc only.*

In 2012, our condensing unit and rack ranges will be upgraded according to the characteristics of the new semi-hermetic compressors with optimized energy efficiency and compatible with R404A as well as R134a:

**STREAM range**
for compressors with 4 to 6 cylinders

**ECOLINE range**
for compressors with 2 to 6 cylinders

HEATCRAFT™
Worldwide Refrigeration

# Encased outdoor condensing unit

## MEGA range

- Air condensing unit with:
- equipment "tailored to needs",
- casing (optional) for outdoor installation,
- horizontal air blowing,
- two compressor technologies,
- a standard condenser,
- or oversized for hot climates.

Heatcraft reserves itself the right to make changes at any time without preliminary notice - Photos non-contractual

MEGA with **CAR** option

3 ... 72 kW

FRIGA-BOHN

HYFRA® PEDIA

HK® REFRIGERATION

## Market segments

*FSM Hard Discount - Supermarkets - Hypermarkets*
*FCS Refrigerated storage and transit stocking - Food processing - Canteen kitchens*

## Designation

# MEGA SH(1) P(2) 85(3) AS(4)

(1) **SH** = Semi-hermetic compressor
**Sc** = Scroll compressor
(2) **P** = Chill range – **N** = Low temperature range
(3) Model
(5) **A** = Standard - **AS** = Oversized

## Composition of models

• Select for each model:
**The compressor technology,**
- SH (semi-hermetic piston)
- or Sc (Scroll).
**The condenser:**
- standard
- or S (oversized) for high ambient temperatures up to +43°C.

## Certifications

## Description

### Frame / Casing

• Rigid, thick sheet metal frame limiting transmission of vibrations.
• Pre-painted (RAL 9002), sheet metal protection casing (**CAR** option).

### Compressor

• A choice of semi-hermetic compressor or Scroll compressor.
• The following are supplied in all cases: suction and delivery valves, casing heater and oil level indicator.

### Condenser

• 1 to 4 fans according to the models.

### Receiver

• The receiver is supplied with a delivery valve and safety valve (receiver ≥ 11 l.).

### Control and safety

• The semi-hermetic compressor models are equipped with an oil differential pressure switch.
• LP control is provided with an adjustable pressure switch.
• HP safety is provided with 1 or 2 automatic-reset cartridge pressure switched. (compliant with standard EN 378-2:2009).

### Wiring

• Wiring is provided to a junction box.

## Advantages

| Installation |
|---|
| Casing option (**CAR**) for installation of the unit outdoors. |
| Largely dimensioned liquid receiver: distance between the unit and the unit coolers up to 25 metres. |
| Oversized condenser for applications with high ambient temperatures. |
| Possibility of providing a wide range of factory-fitted optional extras to help reduce installation time on site. |
| **Servicing / Maintenance** |
| Easy maintenance and servicing thanks to unimpeded access to components. |

## Options

| Kit | Factory | |
|---|---|---|
| | CAC | Additional casing strap (**Scroll**). |
| | BAC | Suction accumulator. |
| | LIQ | Liquid line with dryer filter, hygroscopic indicator and operating valve. |
| | MAN | HP and LP manometers. |
| | RLS | Oversized receiver. |
| | RPC | Control of condensation pressure. |
| | SHU | Oil separator. |
| | VFA | Valve + suction filter. |
| | ARM | Switching enclosure with main isolator switch (compressor and condenser protection). |
| | CAR | Pre-painted galvanized sheet metal casing. |
| | EVL | Solenoid valve (not fitted). |
| | GPC | Condenser protection guard. |
| | ECC | Crate packaging (for the condensing units). |

## MEGA : 1 x Ø 500 mm

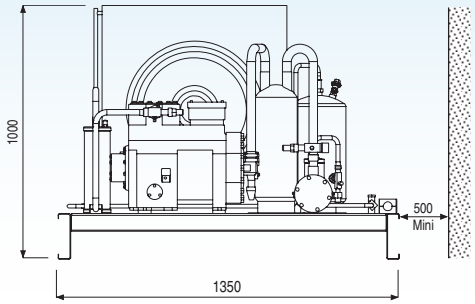


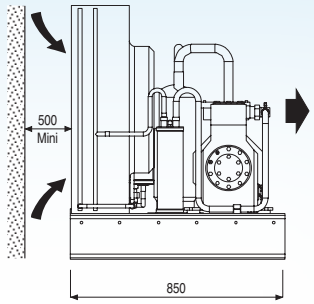


## MEGA : 2 x Ø 500 mm

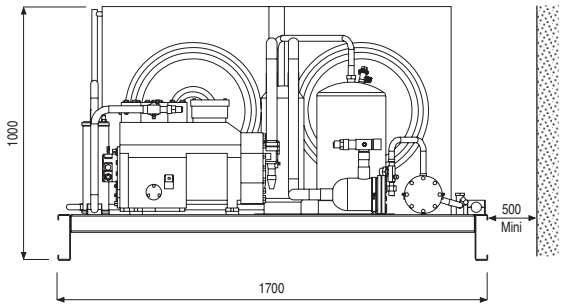


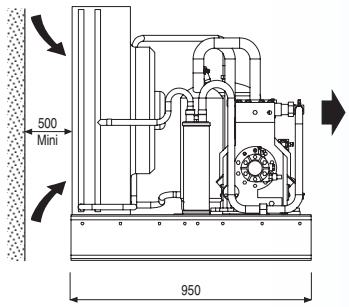


## MEGA : 2 x Ø 630 mm

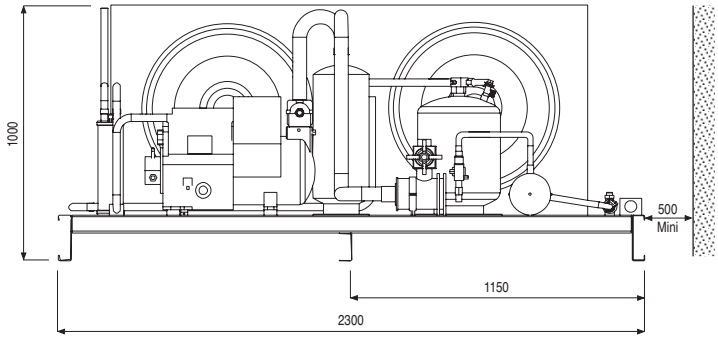


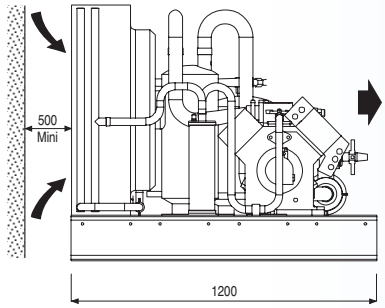


## MEGA : 4 x Ø 630 mm

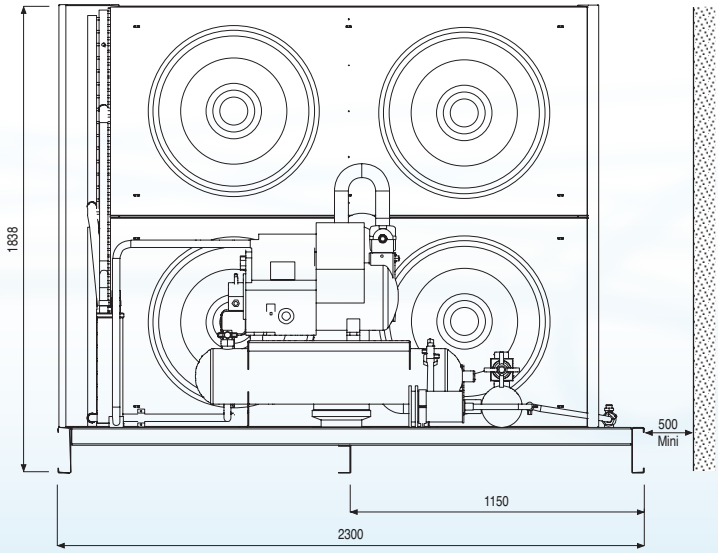


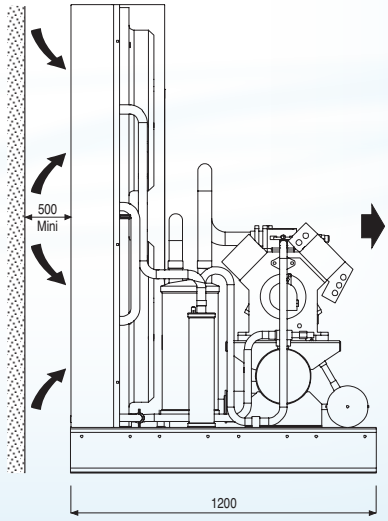

## MEGA - Standard

Chill range

| | | MEGA SH P ... | 80A | 85A | 100A | 170A | 200A | 250A | 300A | 350A | 400A | 500A |
|---|---|---|---|---|---|---|---|---|---|---|---|---|
| SH (1) -10°C/+32°C | Capacity R404A* | kW | 11,55 | 16,22 | 19,86 | 25,30 | 30,84 | 37,39 | 48,51 | 56,97 | 66,00 | 72,43 |
| | Input power* | kW | 5,68 | 8,53 | 9,61 | 13,24 | 16,15 | 20,23 | 26,93 | 31,56 | 37,44 | 43,98 |
| | Input current | A max. | 14,0 | 19,6 | 22,6 | 31,1 | 39,3 | 48,3 | 65,6 | 77,1 | 96,6 | 115,6 |
| Fan | 1,500 rpm | mm | 1 x 500 | 2 x 500 | 2 x 500 | 2 x 500 | 2 x 630 | 2 x 630 | 4 x 630 | 4 x 630 | 4 x 630 | 4 x 630 |
| Air flow | | $m^3/h$ | 5315 | 11950 | 11270 | 10630 | 21300 | 21300 | 46400 | 46400 | 46400 | 42600 |
| Liquid volume | | l. | 11 | 11 | 15 | 24 | 30 | 30 | 40 | 40 | 40 | 40 |
| Connections | Suction | Ø | 1"3/8 | 1"3/8 | 1"3/8 | 1"5/8 | 1"5/8 | 2"1/8 | 2"1/8 | 2"1/8 | 2"1/8 | 2"1/8 |
| | Liquid | Ø | 5/8" | 5/8" | 7/8" | 7/8" | 7/8" | 7/8" | 7/8" | 7/8" | 1"1/8 | 1"1/8 |
| Weight without **CAR** option | | kg | 264 | 313 | 337 | 362 | 418 | 470 | 558 | 597 | 600 | 623 |
| Weight with **CAR** option | | kg | 339 | 398 | 422 | 447 | 538 | 590 | 718 | 757 | 760 | 783 |
| | | MEGA Sc P ... | - | - | 100A | 170A | - | - | - | - | - | - |
| Sc (1) -10°C/+32°C | Capacity R404A* | kW | - | - | 20,28 | 23,64 | - | - | - | - | - | - |
| | Input power* | kW | - | - | 12,13 | 14,54 | - | - | - | - | - | - |
| | Input current | A max. | - | - | 27,2 | 32,0 | - | - | - | - | - | - |
| Fan | 1,500 rpm | mm | - | - | 2 x 500 | 2 x 500 | - | - | - | - | - | - |
| Air flow | | $m^3/h$ | - | - | 11270 | 10630 | - | - | - | - | - | - |
| Liquid volume | | l. | - | - | 15 | 24 | - | - | - | - | - | - |
| Connections | Suction | Ø | - | - | 1"3/8 | 1"5/8 | - | - | - | - | - | - |
| | Liquid | Ø | - | - | 7/8" | 7/8" | - | - | - | - | - | - |
| Weight without **CAR** option | | kg | - | - | 272 | 277 | - | - | - | - | - | - |
| Weight with **CAR** option | | kg | - | - | 357 | 362 | - | - | - | - | - | - |

## MEGA - Oversized condenser

Chill range

| | | MEGA SH P ... | 80AS | 85AS | 100AS | 170AS | 200AS | 250AS | 300AS | 350AS | 400AS | - |
|---|---|---|---|---|---|---|---|---|---|---|---|---|
| SH (1) -10°C/+42°C | Capacity R404A* | kW | 10,07 | 14,01 | 16,65 | 23,49 | 27,59 | 34,13 | 41,02 | 48,34 | 55,38 | - |
| | Input power* | kW | 6,48 | 8,90 | 10,18 | 16,38 | 20,70 | 24,75 | 28,64 | 33,38 | 39,56 | - |
| | Input current | A max. | 15,1 | 19,6 | 22,6 | 35,8 | 46,1 | 55,1 | 65,6 | 77,1 | 96,6 | - |
| Fan | 1,500 rpm | mm | 2 x 500 | 2 x 500 | 2 x 500 | 2 x 630 | 4 x 630 | 4 x 630 | 4 x 630 | 4 x 630 | 4 x 630 | - |
| Air flow | | m3/h | 11950 | 11270 | 10630 | 21300 | 46400 | 46400 | 42600 | 42600 | 42600 | - |
| Liquid volume | | l. | 11 | 11 | 15 | 30 | 40 | 40 | 40 | 40 | 40 | - |
| Connections | Suction | Ø | 1"3/8 | 1"3/8 | 1"3/8 | 1"5/8 | 1"5/8 | 2"1/8 | 2"1/8 | 2"1/8 | 2"1/8 | - |
| | Liquid | Ø | 5/8" | 5/8" | 7/8" | 7/8" | 7/8" | 7/8" | 7/8" | 7/8" | 1"1/8 | - |
| Weight without **CAR** option | | kg | 294 | 322 | 419 | 415 | 501 | 553 | 578 | 617 | 620 | - |
| Weight with **CAR** option | | kg | 379 | 407 | 504 | 535 | 661 | 713 | 738 | 777 | 780 | - |
| | | MEGA Sc P ... | - | - | 100AS | - | - | - | - | - | - | - |
| Sc (1) -10°C/+42°C | Capacity R404A* | kW | - | - | 16,43 | - | - | - | - | - | - | - |
| | Input power* | kW | - | - | 14,36 | - | - | - | - | - | - | - |
| | Input current | A max. | - | - | 27,2 | - | - | - | - | - | - | - |
| Fan | 1,500 rpm | mm | - | - | 2 x 500 | - | - | - | - | - | - | - |
| Air flow | | $m^3/h$ | - | - | 10630 | - | - | - | - | - | - | - |
| Liquid volume | | l. | - | - | 15 | - | - | - | - | - | - | - |
| Connections | Suction | Ø | - | - | 1"3/8 | - | - | - | - | - | - | - |
| | Liquid | Ø | - | - | 7/8" | - | - | - | - | - | - | - |
| Weight without **CAR** option | | kg | - | - | 280 | - | - | - | - | - | - | - |
| Weight with **CAR** option | | kg | - | - | 365 | - | - | - | - | - | - | - |

**Superheating: 10K - Subcooling: 3K.*
*(1) **SH**: Semi-hermetic compressor - **Sc**: Scroll compressor*

| | CAC | BAC | LIQ | MAN | RLS 15 l. | RLS 24 l. | RPC | SHU | VFA | ARM | CAR | EVL | GPC | ECC |
|---|---|---|---|---|---|---|---|---|---|---|---|---|---|---|
| **MEGA SH P 80A** | - | O | O | O | O | - | O | O | O | O | O | O | O | O |
| **MEGA SH P 85A** | - | O | O | O | O | - | O | O | O | O | O | O | O | O |
| **MEGA SH P 100A** | - | O | O | O | - | O | O | O | O | O | O | O | O | O |
| **MEGA SH P 170A** | - | O | O | O | - | - | O | O | O | O | O | O | O | O |
| **MEGA SH P 200A** | - | O | O | O | - | - | O | O | O | O | O | O | O | O |
| **MEGA SH P 250A** | - | O | O | O | - | - | O | O | O | O | O | O | O | O |
| **MEGA SH P 300A** | - | O | O | O | - | - | O | O | O | O | O | O | O | O |
| **MEGA SH P 350A** | - | O | O | O | - | - | O | O | O | O | O | O | O | O |
| **MEGA SH P 400A** | - | O | O | O | - | - | O | O | O | O | O | O | O | O |
| **MEGA SH P 500A** | - | O | O | O | - | - | O | O | O | O | O | O | O | O |
| **MEGA Sc P 100A** | O | - | O | O | - | O | O | O | O | O | O | O | O | O |
| **MEGA Sc P 170A** | O | - | O | O | - | - | O | O | O | O | O | O | O | O |

## MEGA - Standard

Low temperature range

| | | MEGA SH N ... | 55A | 85A | 105A | 155A | 205A | 255A | 305A | 405A |
|---|---|---|---|---|---|---|---|---|---|---|
| SH (1) -35°C/+32°C | Capacity R404A* | kW | 4,87 | 5,80 | 8,28 | 10,39 | 13,51 | 15,01 | 20,34 | 24,46 |
| | Input power* | kW | 4,59 | 5,48 | 7,72 | 10,23 | 12,45 | 14,87 | 20,38 | 26,41 |
| | Input current | A max. | 13,0 | 15,0 | 21,6 | 33,1 | 35,1 | 47,1 | 61,8 | 84,8 |
| Fan | 1,500 rpm | mm | 1 x 500 | 1 x 500 | 2 x 500 | 2 x 500 | 2 x 500 | 2 x 500 | 2 x 630 | 2 x 630 |
| Air flow | | $m^3/h$ | 5634 | 5634 | 11948 | 11268 | 10630 | 10630 | 21300 | 21300 |
| Liquid volume | | l. | 11 | 11 | 15 | 15 | 24 | 24 | 30 | 40 |
| Connections | Suction | Ø | 1"1/8 | 1"3/8 | 1"3/8 | 1"5/8 | 2"1/8 | 2"1/8 | 2"1/8 | 2"1/8 |
| | Liquid | Ø | 1/2" | 1/2" | 5/8" | 5/8" | 7/8" | 7/8" | 7/8" | 7/8" |
| Weight without **CAR** option | | kg | 269 | 277 | 326 | 359 | 385 | 417 | 497 | 508 |
| Weight with **CAR** option | | kg | 332 | 340 | 400 | 433 | 459 | 491 | 727 | 738 |
| | | MEGA Sc N ... | - | - | 105A | 155A | - | - | - | - |
| Sc (1) -35°C/+32°C | Capacity R404A* | kW | - | - | 7,64 | 9,24 | - | - | - | - |
| | Input power* | kW | - | - | 8,78 | 11,10 | - | - | - | - |
| | Input current | A max. | - | - | 27,2 | 32,7 | - | - | - | - |
| Fan | 1,500 rpm | mm | - | - | 2 x 500 | 2 x 500 | - | - | - | - |
| Air flow | | $m^3/h$ | - | - | 11948 | 11268 | - | - | - | - |
| Liquid volume | | l. | - | - | 15 | 15 | - | - | - | - |
| Connections | Suction | Ø | - | - | 1"3/8 | 1"5/8 | - | - | - | - |
| | Liquid | Ø | - | - | 5/8" | 5/8" | - | - | - | - |
| Weight without **CAR** option | | kg | - | - | 253 | 293 | - | - | - | - |
| Weight with **CAR** option | | kg | - | - | 327 | 367 | - | - | - | - |

## MEGA - Oversized condenser

Low temperature range

| | | MEGA SH N ... | 55AS | 85AS | 105AS | 155AS | 205AS | 255AS | 305AS | 405AS |
|---|---|---|---|---|---|---|---|---|---|---|
| SH (1) -35°C/+42°C | Capacity R404A* | kW | 3,73 | 4,84 | 6,74 | 7,96 | 10,30 | 13,07 | 15,68 | 18,80 |
| | Input power* | kW | 4,57 | 6,06 | 7,86 | 10,32 | 12,50 | 17,69 | 20,95 | 26,65 |
| | Input current | A max. | 13,0 | 16,1 | 21,6 | 33,1 | 39,1 | 51,6 | 61,8 | 91,6 |
| Fan | 1,500 rpm | mm | 1 x 500 | 2 x 500 | 2 x 500 | 2 x 500 | 2 x 500 | 2 x 630 | 2 x 630 | 4 x 630 |
| Air flow | | $m^3/h$ | 5315 | 11948 | 11268 | 10630 | 10630 | 21300 | 21300 | 46400 |
| Liquid volume | | l. | 11 | 11 | 15 | 15 | 24 | 30 | 30 | 40 |
| Connections | Suction | Ø | 1"1/8 | 1"3/8 | 1"3/8 | 1"5/8 | 2"1/8 | 2"1/8 | 2"1/8 | 2"1/8 |
| | Liquid | Ø | 1/2" | 1/2" | 5/8" | 5/8" | 7/8" | 7/8" | 7/8" | 7/8" |
| Weight without **CAR** option | | kg | 273 | 311 | 335 | 367 | 385 | 489 | 497 | 591 |
| Weight with **CAR** option | | kg | 336 | 385 | 409 | 441 | 459 | 719 | 727 | 881 |
| | | MEGA Sc N ... | - | - | 105AS | 155AS | - | - | - | - |
| Sc (1) -35°C/+42°C | Capacity R404A* | kW | - | - | 6,44 | 7,63 | - | - | - | - |
| | Input power* | kW | - | - | 9,83 | 12,66 | - | - | - | - |
| | Input current | A max. | - | - | 27,2 | 32,7 | - | - | - | - |
| Fan | 1,500 rpm | mm | - | - | 2 x 500 | 2 x 500 | - | - | - | - |
| Air flow | | $m^3/h$ | - | - | 11268 | 10630 | - | - | - | - |
| Liquid volume | | l. | - | - | 15 | 15 | - | - | - | - |
| Connections | Suction | Ø | - | - | 1"3/8 | 1"5/8 | - | - | - | - |
| | Liquid | Ø | - | - | 5/8" | 5/8" | - | - | - | - |
| Weight without **CAR** option | | kg | - | - | 272 | 303 | - | - | - | - |
| Weight with **CAR** option | | kg | - | - | 346 | 377 | - | - | - | - |

**Superheating: 10K - Subcooling: 3K.*
*(1) **SH**: Semi-hermetic compressor - **Sc**: Scroll compressor*

| | CAC | BAC | LIQ | MAN | RLS 15 l. | RLS 24 l. | RPC | SHU | VFA | ARM | CAR | EVL | GPC | ECC |
|---|---|---|---|---|---|---|---|---|---|---|---|---|---|---|
| **MEGA SH N 55A** | - | O | O | O | O | - | O | O | - | O | O | O | O | O |
| **MEGA SH N 85A** | - | O | O | O | O | - | O | O | O | O | O | O | O | O |
| **MEGA SH N 105A** | - | O | O | O | - | O | O | O | O | O | O | O | O | O |
| **MEGA SH N 155A** | - | O | O | O | - | O | O | O | O | O | O | O | O | O |
| **MEGA SH N 205A** | - | O | O | O | - | O | O | O | O | O | O | O | O | O |
| **MEGA SH N 255A** | - | O | O | O | - | O | O | O | O | O | O | O | O | O |
| **MEGA SH N 305A** | - | O | O | O | - | O | O | O | O | O | O | O | O | O |
| **MEGA SH N 405A** | - | O | O | O | - | O | O | O | O | O | O | O | O | O |
| **MEGA Sc N 105A** | O | - | O | O | - | O | O | O | O | O | O | O | O | O |
| **MEGA Sc N 155A** | O | - | O | O | - | O | O | O | O | O | O | O | O | O |

In 2012, our condensing unit and rack ranges will be upgraded according to the characteristics of the new semi-hermetic compressors with optimized energy efficiency and compatible with R404A as well as R134a:

**STREAM range**
for compressors with 4 to 6 cylinders

**ECOLINE range**
for compressors with 2 to 6 cylinders

HEATCRAFT™
Worldwide Refrigeration

E Solutions
Efficiency • Environment

# Encased outdoor condensing unit

## MONOHAVANE range

### Single-compressor

- Vertical-blowing encased air condensing units for outdoor installation on the floor or roof.
- This range offers a low noise model as well as an oversized condenser for use in hot climates.

*Low noise level*

5 ▁▂▃▄▅ 75 kW

FRIGA-BOHN

HYFRA® PEDIA

HK® REFRIGERATION

Heatcraft reserves itself the right to make changes at any time without preliminary notice - Photos non-contractual

# MONOHAVANE - Encased, outdoor, single-compressor unit

## Market segments

*FSM Hard Discount - Supermarkets - Hypermarkets*
*FCS Refrigerated storage and transit stocking - Food processing - Canteen kitchens*

## Designation

**MONOHV N(1) 75(2) AS(3)**

(1) **P** = Chill range - **N** = Low temperature range
(2) Model
(3) **A** = Standard
**AS** = Oversized
**AS+** = Oversized "plus"
**ALN** = Low noise level

## Composition of models

• Select for each model:
**The noise level,**
- standard
- or LN (low noise), suitable when noise is a problem.
**The condenser,**
- standard
- or S and S+ (oversized) for high ambient temperatures.

## Advantages

### Installation

Condensing units delivered "turnkey" with factory pre-wired switching enclosure to help reduce installation time.

Oversized condenser for the AS model for installation in zones with high ambient temperatures.

The low noise ALN model is ideal for use in an urban environment.

Outputs and unit protection devices.
Designed to accommodate as many cooling outputs as required.

### Servicing / Maintenance

Side panels easily removed for unimpeded access to all components.

Possibility of placing the door in hood position for easy access during work inside the switching enclosure (see photo).

## Certifications

## Description

### Frame / Casing

• Sheet metal frame and pre-painted casing (RAL 9002).
• Installed outdoors on the ground or roof.

### Compressor

• Semi-hermetic piston of 7.5 to 50 HP with suction and delivery valves, casing heater and head fan for low-temperature applications.

### Condenser

• From 2 to 4 fans with casing protection of hairpins.

### Receiver

• With service and safety valves.

### Liquid line

• Composed of a dryer filter cartridge, hygroscopic indicator and operating valve.

### Control and safety

• LP control is provided with an adjustable LP pressure switch.
• HP control is provided with an adjustable HP pressure switch.
• HP safety is provided with 1 or 2 automatic-reset cartridge pressure switched (in accordance with standard EN 378-2): 2009).
• Oil differential pressure switch.

### Switching enclosure

• Sealed, with main isolator switch on the side and "power on" indicator. Outputs and unit protection devices.
• Designed to accommodate as many cooling outputs.
• The cabinet is closed with a 1/4-turn screw.

## Options

### Low noise level

Silent condenser, noise insulated compressor compartment.
Contact us for the selection.

### Oversized condenser

For use with high ambient temperatures up to 42°C, as defined in the selection charts and up to 45°C after study.

| Kit | Factory | |
|---|---|---|
| | BAC | Suction accumulator. |
| | BPS | LP safety pressure switch |
| | MAN | HP and LP manometers. |
| | RLS | Oversized receiver. |
| | SHU | Oil separator. |
| | VFA | Valve + suction filter. |
| ANM | | Lifting rings. |
| EVL | | Solenoid valve. |
| | GPC | Condenser protection guard. |
| PAV | | Anti-vibration pads. |

## MONOHAVANE - Standard

Chill range

| -10°C/+32°C | | MONOHV P... | 75 A | 100 A | 150 A | 200 A | 250 A | 300 A | 350 A | 400 A | 500 A |
|---|---|---|---|---|---|---|---|---|---|---|---|
| Capacity R404A* | | kW | **16,22** | **20,43** | **25,30** | **30,84** | **37,39** | **47,32** | **53,53** | **59,89** | **68,64** |
| Input power* | | kW | **8,53** | **9,49** | **13,24** | **16,15** | **20,23** | **25,27** | **31,27** | **35,86** | **41,64** |
| Input current | | A max. | 19,6 | 22,6 | 31,1 | 39,3 | 48,3 | 61,7 | 71,2 | 88,2 | 104,0 |
| Fan | Nb x Ø | mm | 2 x 500 | 2 x 500 | 2 x 500 | 2 x 630 | 2 x 630 | 3 x 630 | 3 x 630 | 3 x 630 | 2 x 800 |
| Air flow | | m3/h | 11948 | 10630 | 10630 | 21300 | 21300 | 31950 | 31950 | 31950 | 37911 |
| Liquid capacity | | l. | 21 | 21 | 21 | 40 | 40 | 40 | 40 | 40 | 50 |
| Dimensions | L | mm | 2995 | 2995 | 2995 | 3475 | 3475 | 4375 | 4375 | 4375 | 4100 |
| | P | mm | 920 | 920 | 920 | 920 | 920 | 920 | 920 | 920 | 1230 |
| | H | mm | 1190 | 1190 | 1190 | 1190 | 1190 | 1190 | 1190 | 1190 | 1420 |
| Connections | Suction | Ø | 1" 3/8 | 1" 3/8 | 1" 5/8 | 1" 5/8 | 2" 1/8 | 2" 1/8 | 2" 1/8 | 2" 1/8 | 2" 5/8 |
| | Liquid | Ø | 5/8" | 5/8" | 5/8" | 5/8" | 7/8" | 7/8" | 7/8" | 1" 1/8 | 1" 1/8 |
| Net weight | | kg | 540 | 570 | 570 | 650 | 670 | 740 | 760 | 770 | 980 |

** Evaporation temperature/Ambient temperature - 10K superheating and 3K subcooling.*

## MONOHAVANE - Low noise level

Chill range

| -10°C/+32°C | | MONOHV P... | 75 ALN | 100 ALN | 150 ALN | 200 ALN | 250 ALN | 300 ALN | 350 ALN | - | - |
|---|---|---|---|---|---|---|---|---|---|---|---|
| Capacity R404A* | | kW | **17,50** | **20,26** | **27,60** | **30,53** | **36,94** | **42,43** | **50,95** | - | - |
| Input power* | | kW | **7,65** | **8,89** | **12,31** | **12,96** | **17,07** | **21,19** | **27,03** | - | - |
| Input current | | A max. | 18,1 | 21,1 | 30,0 | 34,8 | 43,8 | 53,8 | 63,4 | - | - |
| Acoustic | Lp at 10 m (1) | dB(A) | 44 | 45 | 44 | 46 | 46 | 48 | 46 | - | - |
| Fan | Nb x Ø | mm | 2 x 630 | 2 x 630 | 3 x 630 | 2 x 800 | 2 x 800 | 2 x 800 | 2 x 800 | - | - |
| Air flow | | m3/h | 6060 | 6060 | 9090 | 16247 | 16247 | 16247 | 21776 | - | - |
| Liquid capacity | | l. | 21 | 21 | 40 | 40 | 40 | 40 | 50 | - | - |
| Dimensions | L | mm | 3475 | 3475 | 4375 | 4100 | 4100 | 4100 | 4700 | - | - |
| | P | mm | 920 | 920 | 920 | 1230 | 1230 | 1230 | 1230 | - | - |
| | H | mm | 1190 | 1190 | 1190 | 1420 | 1420 | 1420 | 1420 | - | - |
| Connections | Suction | Ø | 1" 3/8 | 1" 3/8 | 1" 5/8 | 1" 5/8 | 2" 1/8 | 2" 1/8 | 2" 1/8 | - | - |
| | Liquid | Ø | 5/8" | 5/8" | 5/8" | 5/8" | 7/8" | 7/8" | 7/8" | - | - |
| Net weight | | kg | 590 | 600 | 690 | 870 | 880 | 890 | 1030 | - | - |

** Evaporation temperature/Ambient temperature - 10K superheating and 3K subcooling.*
*(1) Sound pressure in dB(A) measured at 10 m, line of sight in a reflective surface, in accordance with standard EN 13487 (parallelepiped reference surface).*

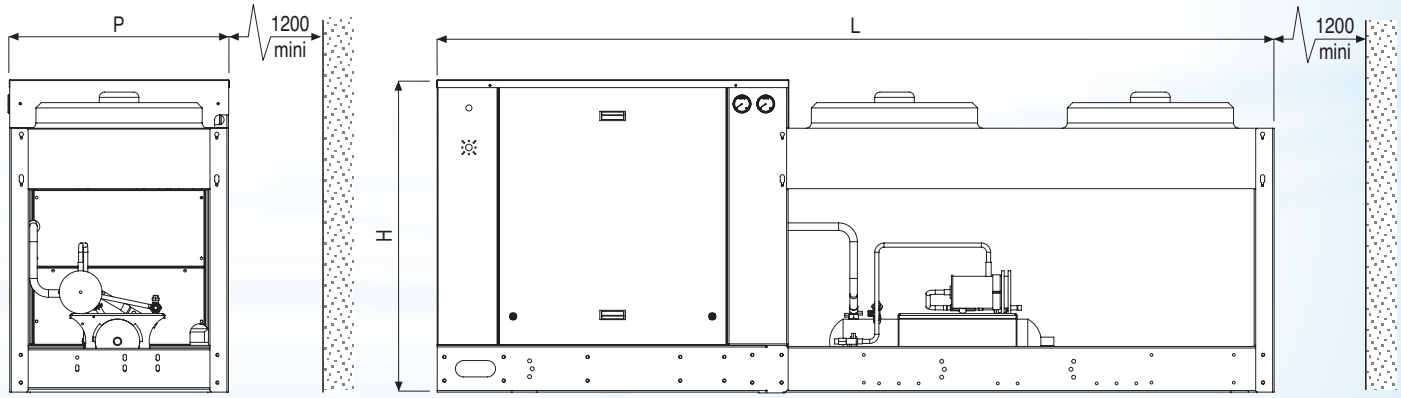


| BAC | BPS | MAN | RLS | SHU | VFA | ANM | EVL | GPC | PAV |
|---|---|---|---|---|---|---|---|---|---|
| O | O | O | O | O | O | O | O | O | O |

## MONOHAVANE - Oversized condenser

Chill range

| -10°C/+42°C | | MONOHV P... | 75 AS | 100 AS | 150 AS | 200 AS | 250 AS | 300 AS | 350 AS | 400 AS | 500 AS |
|---|---|---|---|---|---|---|---|---|---|---|---|
| Capacity R404A* | | kW | 14,41 | 18,44 | 23,49 | 27,05 | 33,28 | 39,43 | 44,31 | 49,40 | 61,56 |
| Input power* | | kW | 8,84 | 12,62 | 16,38 | 18,85 | 22,94 | 25,87 | 31,91 | 36,67 | 43,10 |
| Input current | | A max. | 19,6 | 27,3 | 35,8 | 42,7 | 51,7 | 63,5 | 73,0 | 90,0 | 104,0 |
| Fan | Nb x Ø | mm | 2 x 500 | 2 x 630 | 2 x 630 | 3 x 630 | 3 x 630 | 2 x 800 | 2 x 800 | 2 x 800 | 2 x 910 |
| Air flow | | m3/h | 10630 | 21300 | 21300 | 31950 | 31950 | 37911 | 37911 | 37911 | 40310 |
| Liquid capacity | | l. | 21 | 21 | 21 | 40 | 40 | 40 | 50 | 50 | 50 |
| Dimensions | L | mm | 2995 | 3475 | 3475 | 4375 | 4375 | 4100 | 4100 | 4100 | 4700 |
| | P | mm | 920 | 920 | 920 | 920 | 920 | 1230 | 1230 | 1230 | 1230 |
| | H | mm | 1190 | 1190 | 1190 | 1190 | 1190 | 1420 | 1420 | 1420 | 1420 |
| Connections | Suction | Ø | 1" 3/8 | 1" 3/8 | 1" 5/8 | 1" 5/8 | 2" 1/8 | 2" 1/8 | 2" 1/8 | 2" 1/8 | 2" 5/8 |
| | Liquid | Ø | 5/8" | 5/8" | 5/8" | 5/8" | 7/8" | 7/8" | 7/8" | 1" 1/8 | 1" 1/8 |
| Net weight | | kg | 560 | 610 | 610 | 720 | 740 | 890 | 980 | 980 | 1100 |

** Evaporation temperature/Ambient temperature - 10K superheating and 3K subcooling.*

## MONOHAVANE - Oversized "plus"

Chill range

| -10°C/+44°C | | MONOHV P... | 75 AS+ | 100 AS+ | 150 AS+ | 200 AS+ | 250 AS+ | 300 AS+ | 350 AS+ | - | - |
|---|---|---|---|---|---|---|---|---|---|---|---|
| Capacity R404A* | | kW | 13,88 | 17,66 | 24,08 | 26,04 | 32,33 | 38,79 | 46,24 | - | - |
| Input power* | | kW | 8,92 | 12,75 | 18,20 | 19,03 | 21,95 | 26,20 | 31,64 | - | - |
| Input current | | A max. | 19,6 | 27,3 | 39,2 | 42,7 | 53,5 | 63,5 | 73 | - | - |
| Fan | Nb x Ø | mm | 2 x 500 | 2 x 630 | 3 x 630 | 3 x 630 | 2 x 800 | 2 x 800 | 2 x 910 | - | - |
| Air flow | | m3/h | 10630 | 21300 | 31950 | 31950 | 37911 | 34355 | 40310 | - | - |
| Liquid capacity | | l. | 21 | 21 | 21 | 40 | 40 | 40 | 50 | - | - |
| Dimensions | L | mm | 2995 | 2995 | 2995 | 4375 | 4700 | 4700 | 5600 | - | - |
| | P | mm | 920 | 920 | 920 | 920 | 1230 | 1230 | 1250 | - | - |
| | H | mm | 1190 | 1190 | 1190 | 1190 | 1420 | 1420 | 1900 | - | - |
| Connections | Suction | Ø | 1 3/8" | 1 3/8" | 1 5/8" | 1 5/8" | 2 1/8" | 2 1/8" | 2 1/8" | - | - |
| | Liquid | Ø | 5/8" | 5/8" | 5/8" | 5/8" | 7/8" | 7/8" | 7/8" | - | - |
| Net weight | | kg | 560 | 610 | 680 | 720 | 880 | 910 | 1090 | - | - |

** Evaporation temperature/Ambient temperature - 10K superheating and 3K subcooling.*

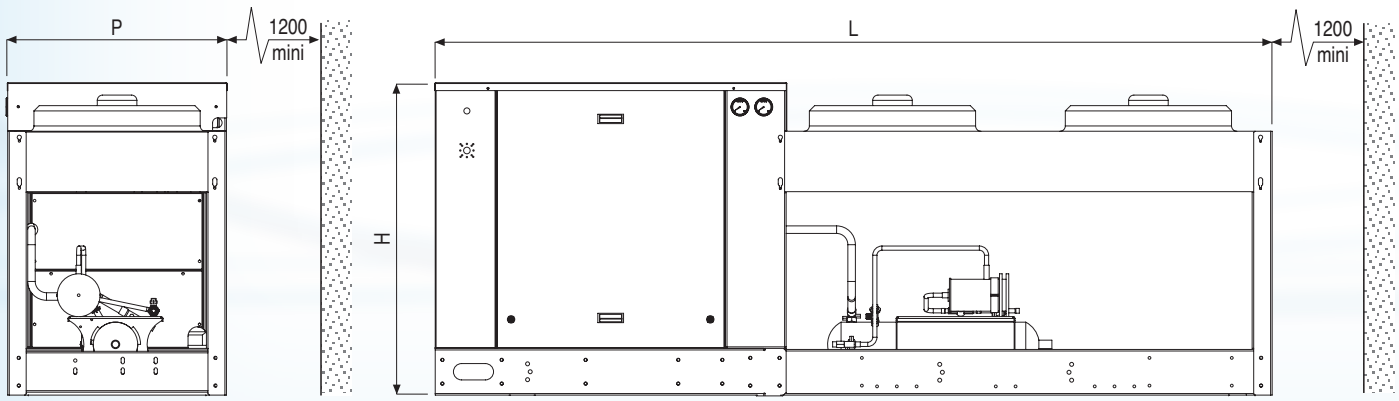


| BAC | BPS | MAN | RLS | SHU | VFA | ANM | EVL | GPC | PAV |
|---|---|---|---|---|---|---|---|---|---|
| O | O | O | O | O | O | O | O | O | O |

## MONOHAVANE - Standard

Low temperature range

| -35°C/+32°C | | MONOHV N... | 80 A | 105 A | 155 A | 205 A | 255 A | 305 A | 405 A |
|---|---|---|---|---|---|---|---|---|---|
| Capacity R404A* | | kW | **6,34** | **8,28** | **10,34** | **13,51** | **14,31** | **17,91** | **20,23** |
| Input power* | | kW | **6,02** | **7,72** | **10,31** | **12,45** | **14,64** | **18,97** | **21,65** |
| Input current | | A max. | 20,4 | 26,5 | 37,4 | 44,9 | 47,1 | 59,8 | 84,8 |
| Fan | Nb x Ø | mm | 2 x 500 | 2 x 500 | 2 x 500 | 2 x 500 | 2 x 500 | 2 x 630 | 2 x 630 |
| Air flow | | m3/h | 11948 | 11948 | 11948 | 10630 | 10630 | 21300 | 21300 |
| Liquid capacity | | l. | 21 | 21 | 21 | 21 | 40 | 40 | 40 |
| Dimensions | L | mm | 2995 | 2995 | 2995 | 2995 | 2995 | 3475 | 3475 |
| | P | mm | 920 | 920 | 920 | 920 | 920 | 920 | 920 |
| | H | mm | 1190 | 1190 | 1190 | 1190 | 1190 | 1190 | 1190 |
| Connections | Suction | Ø | 1"3/8 | 1"3/8 | 1"5/8 | 2"1/8 | 2"1/8 | 2"1/8 | 2"1/8 |
| | Liquid | Ø | 5/8" | 5/8" | 5/8" | 7/8" | 7/8" | 7/8" | 7/8" |
| Net weight | | kg | 540 | 550 | 600 | 620 | 650 | 690 | 700 |

** Evaporation temperature/Ambient temperature - 10K superheating and 3K subcooling.*

## MONOHAVANE - Low noise level

Low temperature range

| -35°C/+32°C | | MONOHV N... | 80 ALN | 105 ALN | 155 ALN | 205 ALN | 255 ALN | 305 ALN | 405 ALN |
|---|---|---|---|---|---|---|---|---|---|
| Capacity R404A* | | kW | **5,67** | **7,60** | **11,29** | **14,60** | **15,71** | **17,70** | **19,91** |
| Input power* | | kW | **5,05** | **6,79** | **9,61** | **11,97** | **14,16** | **15,74** | **18,41** |
| Input current | | A max. | 18,6 | 24,7 | 35,9 | 43,8 | 46,0 | 55,3 | 80,3 |
| Acoustic | Lp at 10 m (1) | dB(A) | 41 | 41 | 47 | 48 | 50 | 50 | 51 |
| Fan | Nb x Ø | mm | 2 x 500 | 2 x 500 | 2 x 630 | 3 x 630 | 3 x 630 | 2 x 800 | 2 x 800 |
| Air flow | | m3/h | 4892 | 4066 | 6060 | 9090 | 9090 | 16247 | 16247 |
| Liquid capacity | | l. | 21 | 21 | 21 | 40 | 40 | 40 | 50 |
| Dimensions | L | mm | 2995 | 2995 | 3475 | 4375 | 4375 | 4100 | 4100 |
| | P | mm | 920 | 920 | 920 | 920 | 920 | 1230 | 1230 |
| | H | mm | 1190 | 1190 | 1190 | 1190 | 1190 | 1420 | 1420 |
| Connections | Suction | Ø | 1"3/8 | 1"3/8 | 1"5/8 | 2"1/8 | 2"1/8 | 2"1/8 | 2"1/8 |
| | Liquid | Ø | 5/8" | 5/8" | 5/8" | 7/8" | 7/8" | 7/8" | 7/8" |
| Net weight | | kg | 540 | 570 | 640 | 740 | 750 | 900 | 980 |

** Evaporation temperature/Ambient temperature - 10K superheating and 3K subcooling.*
*(1) Sound pressure in dB(A) measured at 10 m, line of sight in a reflective surface, in accordance with standard EN 13487 (parallelepiped reference surface).*

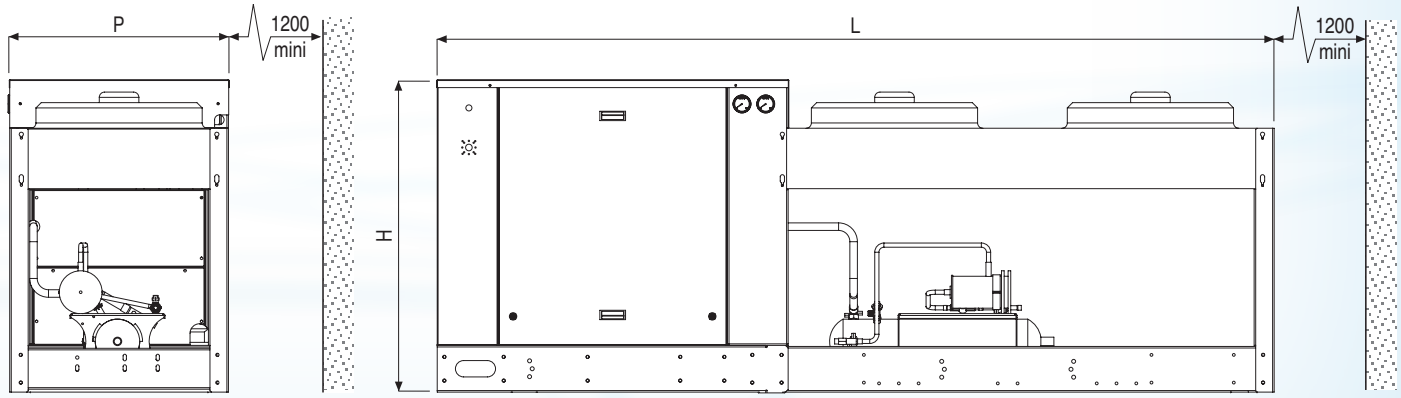


| BAC | BPS | MAN | RLS | SHU | VFA | ANM | EVL | GPC | PAV |
|---|---|---|---|---|---|---|---|---|---|
| O | O | O | O | O | O | O | O | O | O |

## MONOHAVANE - Oversized condenser

**Low temperature range**

| -35°C/+42°C | | MONOHV N... | 80 AS | 105 AS | 155 AS | 205 AS | 255 AS | 305 AS | 405 AS |
|---|---|---|---|---|---|---|---|---|---|
| Capacity R404A* | | kW | 4,84 | 6,42 | 8,61 | 10,3 | 12,33 | 13,67 | 16,38 |
| Input power* | | kW | 6,06 | 7,88 | 10,33 | 12,5 | 17,47 | 19,25 | 23,63 |
| Input current | | A max. | 20,4 | 26,5 | 37,4 | 44,9 | 51,8 | 59,8 | 88,2 |
| Fan | Nb x Ø | mm | 2 x 500 | 2 x 500 | 2 x 500 | 2 x 500 | 2 x 630 | 2 x 630 | 3 x 630 |
| Air flow | | m3/h | 11948 | 11948 | 10630 | 10630 | 21300 | 21300 | 31950 |
| Liquid capacity | | l. | 21 | 21 | 21 | 40 | 40 | 40 | 50 |
| Dimensions | L | mm | 2995 | 2995 | 2995 | 2995 | 3475 | 3475 | 4375 |
| | P | mm | 920 | 920 | 920 | 920 | 920 | 920 | 920 |
| | H | mm | 1190 | 1190 | 1190 | 1190 | 1190 | 1190 | 1190 |
| Connections | Suction | Ø | 1"3/8 | 1"3/8 | 1"5/8 | 2"1/8 | 2"1/8 | 2"1/8 | 2"1/8 |
| | Liquid | Ø | 5/8" | 5/8" | 5/8" | 7/8" | 7/8" | 7/8" | 7/8" |
| Net weight | | kg | 540 | 550 | 610 | 640 | 680 | 690 | 830 |

** Evaporation temperature/Ambient temperature - 10K superheating and 3K subcooling.*

## MONOHAVANE - Oversized "plus"

**Low temperature range**

| -35°C/+44°C | | MONOHV N... | 80 AS+ | 105 AS+ | 155 AS+ | 205 AS+ | 255 AS+ | 305 AS+ | 405 AS+ |
|---|---|---|---|---|---|---|---|---|---|
| Capacity R404A* | | kW | 4,86 | 7,00 | 8,96 | 11,64 | 12,50 | 14,03 | 15,60 |
| Input power* | | kW | 6,06 | 10,59 | 13,08 | 17,22 | 19,42 | 20,03 | 22,47 |
| Input current | | A max. | 20,4 | 31,2 | 42,1 | 53 | 55,2 | 65 | 90 |
| Fan | Nb x Ø | mm | 2 x 500 | 2 x 630 | 2 x 630 | 3 x 630 | 3 x 630 | 2 x 800 | 2 x 800 |
| Air flow | | m3/h | 10630 | 21300 | 21300 | 31950 | 31950 | 37911 | 37911 |
| Liquid capacity | | l. | 21 | 21 | 21 | 40 | 40 | 40 | 50 |
| Dimensions | L | mm | 2995 | 3475 | 3475 | 4375 | 4375 | 4700 | 4700 |
| | P | mm | 920 | 920 | 920 | 920 | 920 | 1230 | 1230 |
| | H | mm | 1190 | 1190 | 1190 | 1190 | 1190 | 1420 | 1420 |
| Connections | Suction | Ø | 1 3/8" | 1 3/8" | 1 5/8" | 2 1/8" | 2 1/8" | 2 1/8" | 2 1/8" |
| | Liquid | Ø | 5/8" | 5/8" | 5/8" | 7/8" | 7/8" | 7/8" | 7/8" |
| Net weight | | kg | 560 | 610 | 650 | 740 | 750 | 900 | 980 |

** Evaporation temperature/Ambient temperature - 10K superheating and 3K subcooling.*

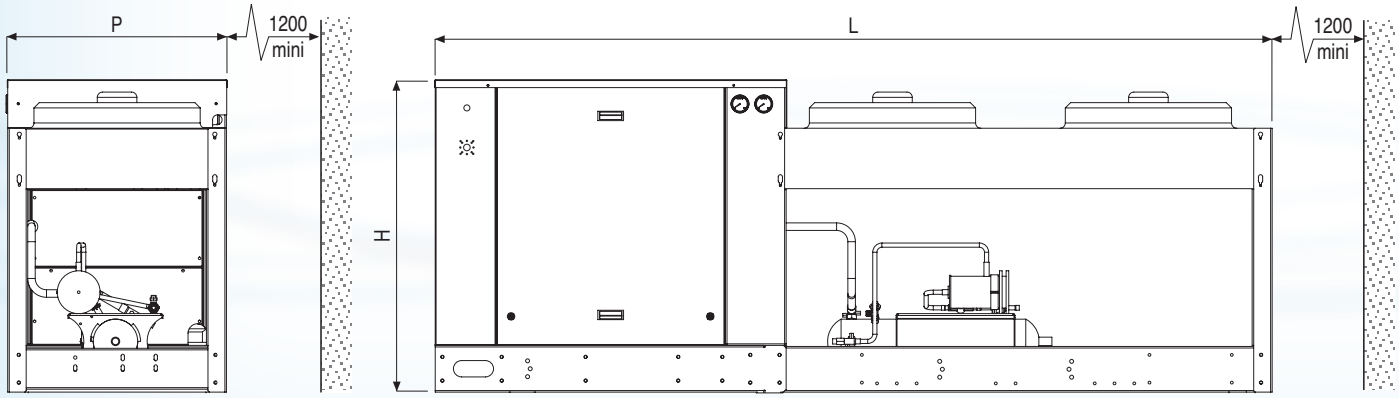


| BAC | BPS | MAN | RLS | SHU | VFA | ANM | EVL | GPC | PAV |
|---|---|---|---|---|---|---|---|---|---|
| O | O | O | O | O | O | O | O | O | O |

In 2012, our condensing unit and rack ranges will be upgraded according to the characteristics of the new semi-hermetic compressors with optimized energy efficiency and compatible with R404A as well as R134a:

**STREAM range**
for compressors with 4 to 6 cylinders

**ECOLINE range**
for compressors with 2 to 6 cylinders

HEATCRAFT™
Worldwide Refrigeration

E Solutions
Efficiency • Environment

# Encased outdoor condensing unit

## MULTIHAVANE range

### Multi-compressors

- Vertical-blowing, multi-compressor, encased air condensing units for outdoor installation on the floor or roof.
- This range offers a low noise model as well as an oversized condenser for use in hot climates.
- Entire unit completely pre-wired including Scroll or Semi-hermetic compressors.
- Capacity ratings of the range:
  - High-temperature application from 100 to 310 kW
  - Medium-temperature application from 15 to 230 kW
  - Low temperature application from 4 to 70 kW.

*Low noise level*

3 290 kW

FRIGA-BOHN

HYFRA® PEDIA

HK® REFRIGERATION

Heatcraft reserves itself the right to make changes at any time without preliminary notice - Photos non-contractual

## Market segments

*FSM Hard Discount - Supermarkets - Hypermarkets*
*FCS Refrigerated storage and transit stocking - Dispatch centres – Food processing*

### Composition of models

• Select for each model:
**The compressor technology,**
- OCT (Octagon semi-hermetic piston),
- or Sc (Scroll),
- or SH (Semi-Hermetic piston).
**The noise level,**
- standard
- or LN (low noise) suitable when noise is a problem (noise isolation of the compressor compartment and condenser with up to 16 fans).
**The condenser,**
- standard
- or S (oversized) for high ambient temperatures.

### Condenser

• The MULTIHAVANE range includes condensers of the type NEOSTAR (L or P) and WA, which are controlled with cascade shutdown.

### Receiver

• Horizontal liquid receiver with 2 inlet/outlet shutoff valves.
• Single or double safety valve with 3-way valve if the capacity is > or = to 100 l.

### Liquid line

• Liquid line with dryer filter with removable cartridge(s), 3/8" SAE fill valve with hydroscopic indicator and shut-off valve(s).

### Connection valves

• Liquid suction valve and delivery valve according on models.

### Control and safety

• The unit is controlled as follows:
- For units with 2 Scroll or Octagon compressors: Pressure control with 1 LP pressure switch per compressor and 1 control HP pressure switch per condenser fan.
- For the other units: Electronic control with LP/HP sensors delivering a 4/20mA signal
• A general safety LP pressure switch.
• One oil differential pressure switch per compressor (only for semi-hermetic compressors and from compressor 4VC for OCT).
• 1 or 2 automatic reset HP pressure switch(s) per compressor. (compliant with standard EN 378-2: 2009) 2009)
• Two manometers (LP+HP).
• Connection of each element with 1/4" flexible hose.

### Switching enclosure

• Switching enclosure with double swing doors and latching system.
• Main isolator switch on front panel with "Power on" indicator.
• All electrical components are connected to a board containing the condensing unit protection and control elements.

## Description

### Frame / Casing

• The frame base is made of folded, high resistance, galvanized sheet metal.
• The casing is composed of RAL 9002 painted sheet metal.
• The casing panels may be easily removed with the ¼-turn latches.
• The base frame is equipped with lifting rings for easy handling.

### Compressors

• The compressors are filled with R404A ester oil and equipped as indicated in the table below:

| | SH Octagon | Scroll | SH |
|---|---|---|---|
| Number of compressors | 2-3-4 | 2-3-4 | 2-3 |
| Casing heater | Yes | Yes | Yes |
| Suction and delivery valves | Yes | Yes | Yes |
| Suction and delivery valves | Yes | Yes | Yes |
| Oil pump | From 4VC | No | Yes |
| Head fan | Low temp. range | No | Low temp. range |

### Collectors

• The suction and delivery collectors are made of stainless steel 304L for SH and copper for Sc and OCT, secured with polypropylene straps on the suction side and high temperature resistant polyamide straps on the delivery side.
• A general filter unit is used on the suction side or one per compressor according to model with removable cartridge(s).

### Oil line

• LP oil return with removable oil separator and tank equipped with high/low level indicator, shut-off valve and calibrated degassing valve in the LP collector with shut-off valve.
• Oil level regulator with float system and a shut-off valve per compressor.

## Advantages

| Installation |
|---|
| Condensing units delivered ready for installation with factory pre-wired switching enclosure to help reduce installation time. |
| The base frame is equipped with lifting rings for easy handling. |
| Oversized condenser for the AS model for installation in zones with high ambient temperatures. |
| The low noise ALN model is ideal for use in an urban environment. |
| **Servicing / Maintenance** |
| The side panels may be simply removed with 1/4 turn latches offering easy access to all components. |
| The electrical enclosure has double swing doors for easy access during all interventions. |

## Options

### Low noise level

Silent condenser, noise insulated compressor compartment.
Contact us for the selection.

### Oversized condenser

For use with high ambient temperatures up to 43°C,
as defined in the selection charts.

| Kit | Factory | |
|---|---|---|
| | **PR2** | 2 suction return valves and 2 liquid delivery valves (for SH model only). |
| | **BP1** | Additional LP pressure switch. |
| | **BPS** | LP safety pressure switch per compressor (automatic reset). |
| | **CDP** | LP/HP pressure sensors, 4/20mA signal. |
| | **HPG** | General HP pressure switch. |
| | **HPS** | Additional HP pressure switch. |
| | **BAC** | Suction accumulator (except SC), with suction or gravity oil return system according to models. |
| | **SIL** | Muffler (for SH model only). |
| | **TXL** | Electronic compressor oil level regulator. |
| | **RLS** | Oversized liquid receiver. |
| | **ALR** | Opto-electronic refrigerant level alarm. |
| | **SSD** | Double safety valve with 3-way valve only for receivers with a capacity of less than 100L (standard for other models). |
| | **BAE** | Protection of fins. |
| | **COQ** | Noise insulation casing on Scroll (except ZF15, ZB38 and ZB45). |
| | **GPC** | Condenser protection guard. |

## Designation

# MHV SH(1) 3(2) PHT(3) D4DH250(4) ALN(5) C5(6) P(7)6(8)-9(9)

(1) Compressor technology:
**SC** = Scroll - **OCT** = Octagon - **SH** = Semi-hermetic
(2) Number of compressor
(3) **N** = Low temperature / **te = - 35°C**
**P** = Chill temperature / **te = - 10°C**
**PHT** = Chill (high-temperature) / **te = 0°C**
(4) Type of compressor
(5) Condenser model:
**A** = Standard - **AS** = Oversized - **ALN** = Low noise
(6) Type of casing: **C1 - C2 - C3 - C4 - C5**
(7) Fan arrangement:
**L** = in line - **P** = in parallel
(8) Number of fans
(9) Type of module or fan Ø:
**A** = 1200 - **B** = 1500 - **D** = 2000 - **5** = 500 mm - **6** = 630 mm

## Certifications

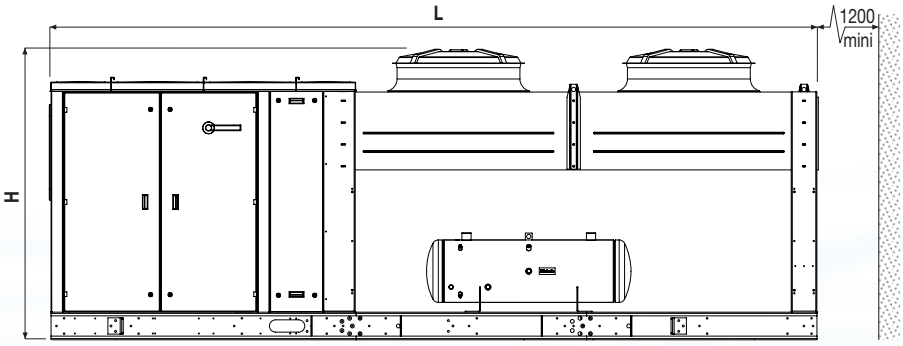


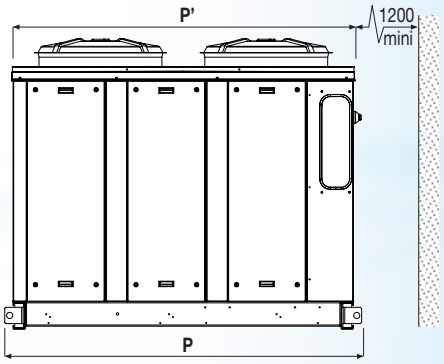


| mm | C1 L2-5 | C1 L2-6 | C1 L3-6 | C2 L2-A | C2 L2-B | C3 L2-A | C3 L2-B | C3 L2-D | C3 L3-A | C3 L3-B | C4 P4-A | C4 P4-B | C4 P4-D | C4 P6-A | C4 P6-B | C5 P4-A | C5 P4-B | C5 P6-9 | C5 P6-B |
|---|---|---|---|---|---|---|---|---|---|---|---|---|---|---|---|---|---|---|---|
| L | 2995 | 3475 | 4375 | 4100 | 4700 | 4400 | 5000 | 6000 | 5600 | 6500 | 4400 | 5000 | 6000 | 5600 | 6500 | 5000 | 5600 | 6200 | 7100 |
| P | 920 | 920 | 920 | 1230 | 1230 | 1250 | 1250 | 1250 | 1250 | 1250 | 2330 | 2330 | 2330 | 2330 | 2330 | 2330 | 2330 | 2330 | 2330 |
| P' | 835 | 835 | 835 | 1140 | 1140 | 1145 | 1145 | 1145 | 1145 | 1145 | 2240 | 2240 | 2240 | 2240 | 2240 | 2240 | 2240 | 2240 | 2240 |
| H | 1190 | 1190 | 1190 | 1420 | 1420 | 1900 | 1900 | 1900 | 1900 | 1900 | 1900 | 1900 | 1900 | 1900 | 1900 | 1900 | 1900 | 1900 | 1900 |

## MULTIHAVANE - Standard

Chill range (high temperature)

| MULTIHAVANE SH | Comp. | Capacity | Input power | Casing | Input current | Receiver capacity | Suction | Liquid | Dimensions | | | Net weight |
|---|---|---|---|---|---|---|---|---|---|---|---|---|
| | Nb | kW (1) | kW (1) | Type | A max. | l. | Ø | Ø | L | P | H | kg |
| MHV SH 2PHT/4H25 A C3 L2-D | 2 | 112,38 | 42,95 | C3 | 102,0 | 145 | 2"5/8 | 1"3/8 | 6000 | 1250 | 1900 | 2040 |
| MHV SH 2PHT/D4DH250 A C3 L2-D | 2 | 117,55 | 40,44 | C3 | 95,0 | 145 | 2"5/8 | 1"3/8 | 6000 | 1250 | 1900 | 2050 |
| MHV SH 2PHT/4G30 A C4 P4-A | 2 | 130,21 | 54,74 | C4 | 130,0 | 145 | 3"1/8 | 1"5/8 | 4400 | 2330 | 1900 | 2240 |
| MHV SH 2PHT/D4DJ300 A C4 P4-A | 2 | 139,21 | 53,41 | C4 | 128,0 | 145 | 3"1/8 | 1"5/8 | 4400 | 2330 | 1900 | 2280 |
| MHV SH 2PHT/6H35 A C4 P6-A | 2 | 175,65 | 67,07 | C4 | 147,8 | 200 | 3"1/8 | 1"5/8 | 5600 | 2330 | 1900 | 2800 |
| MHV SH 2PHT/D6DH350 A C4 P6-A | 2 | 177,51 | 62,11 | C4 | 152,8 | 200 | 3"1/8 | 1"5/8 | 5600 | 2330 | 1900 | 2790 |
| MHV SH 2PHT/6G40 A C4 P6-A | 2 | 197,52 | 77,89 | C4 | 181,8 | 200 | 4"1/8 | 2"1/8 | 5600 | 2330 | 1900 | 2810 |
| MHV SH 2PHT/D6DJ400 A C4 P6-A | 2 | 209,55 | 76,04 | C4 | 191,8 | 200 | 4"1/8 | 2"1/8 | 5600 | 2330 | 1900 | 2860 |
| MHV SH 2PHT/6F50 A C4 P6-A | 2 | 226,67 | 94,52 | C4 | 220,0 | 200 | 4"1/8 | 2"1/8 | 5600 | 2330 | 1900 | 2890 |
| MHV SH 2PHT/D6SK500 A C4 P6-A | 2 | 223,15 | 90,50 | C4 | 215,2 | 200 | 4"1/8 | 2"1/8 | 5600 | 2330 | 1900 | 2900 |
| MHV SH 3PHT/4H25 A C5 P4-A | 3 | 168,02 | 66,91 | C5 | 159,0 | 200 | 3"1/8 | 1"5/8 | 5000 | 2330 | 1900 | 2800 |
| MHV SH 3PHT/D4DH250 A C5 P4-B | 3 | 175,35 | 63,24 | C5 | 148,5 | 200 | 3"1/8 | 1"5/8 | 5600 | 2330 | 1900 | 2830 |
| MHV SH 3PHT/4G30 A C5 P6-A | 3 | 198,16 | 77,93 | C5 | 184,8 | 200 | 4"1/8 | 2"1/8 | 6200 | 2330 | 1900 | 3040 |
| MHV SH 3PHT/D4DJ300 A C5 P6-A | 3 | 211,72 | 75,85 | C5 | 181,8 | 200 | 4"1/8 | 2"1/8 | 6200 | 2330 | 1900 | 3090 |
| MHV SH 3PHT/6H35 A C5 P6-B | 3 | 254,65 | 100,76 | C5 | 219,0 | 200 | 4"1/8 | 2"1/8 | 7100 | 2330 | 1900 | 3320 |
| MHV SH 3PHT/D6DH350 A C5 P6-B | 3 | 257,71 | 93,47 | C5 | 226,5 | 200 | 4"1/8 | 2"1/8 | 7100 | 2330 | 1900 | 3390 |
| MHV SH 3PHT/6G40 A C5 P6-B | 3 | 289,48 | 116,47 | C5 | 270,0 | 200 | 4"1/8 | 2"1/8 | 7100 | 2330 | 1900 | 3330 |
| MHV SH 3PHT/D6DJ400 A C5 P6-B | 3 | 306,62 | 113,99 | C5 | 285,0 | 200 | 4"1/8 | 2"1/8 | 7100 | 2330 | 1900 | 3470 |

## MULTIHAVANE - Oversized condenser

Chill range (high temperature)

| | | | | | | | | | | | | |
|---|---|---|---|---|---|---|---|---|---|---|---|---|
| MHV SH 2PHT/4H25 AS C4 P4-A | 2 | 97,96 | 48,95 | C4 | 107,2 | 145 | 2"5/8 | 1"3/8 | 4400 | 2330 | 1900 | 2290 |
| MHV SH 2PHT/D4DH250 AS C4 P4-A | 2 | 102,19 | 46,47 | C4 | 100,2 | 145 | 2"5/8 | 1"3/8 | 4400 | 2330 | 1900 | 2300 |
| MHV SH 2PHT/4G30 AS C4 P4-B | 2 | 108,76 | 59,45 | C4 | 130,0 | 145 | 3"1/8 | 1"5/8 | 5000 | 2330 | 1900 | 2410 |
| MHV SH 2PHT/D4DJ300 AS C4 P4-A | 2 | 120,57 | 58,44 | C4 | 128,0 | 145 | 3"1/8 | 1"5/8 | 4400 | 2330 | 1900 | 2430 |
| MHV SH 2PHT/6H35 AS C4 P6-A | 2 | 147,02 | 73,25 | C4 | 147,8 | 200 | 3"1/8 | 1"5/8 | 5600 | 2330 | 1900 | 2800 |
| MHV SH 2PHT/D6DH350 AS C4 P6-A | 2 | 149,69 | 68,79 | C4 | 152,8 | 200 | 3"1/8 | 1"5/8 | 5600 | 2330 | 1900 | 2790 |
| MHV SH 2PHT/6G40 AS C4 P6-A | 2 | 167,99 | 88,05 | C4 | 192,0 | 200 | 4"1/8 | 2"1/8 | 5600 | 2330 | 1900 | 2880 |
| MHV SH 2PHT/D6DJ400 AS C4 P6-A | 2 | 178,09 | 86,98 | C4 | 202,0 | 200 | 4"1/8 | 2"1/8 | 5600 | 2330 | 1900 | 2930 |
| MHV SH 2PHT/6F50 AS C4 P6-B | 2 | 198,06 | 104,59 | C4 | 220,0 | 200 | 4"1/8 | 2"1/8 | 6500 | 2330 | 1900 | 3010 |
| MHV SH 2PHT/D6SK500 AS C4 P6-B | 2 | 193,10 | 99,21 | C4 | 225,4 | 200 | 4"1/8 | 2"1/8 | 6500 | 2330 | 1900 | 3100 |
| MHV SH 3PHT/4H25 AS C5 P6-A | 3 | 147,06 | 73,35 | C5 | 160,8 | 200 | 3"1/8 | 1"5/8 | 6200 | 2330 | 1900 | 3030 |
| MHV SH 3PHT/D4DH250 AS C5 P6-A | 3 | 153,41 | 69,63 | C5 | 150,3 | 200 | 3"1/8 | 1"5/8 | 6200 | 2330 | 1900 | 3050 |
| MHV SH 3PHT/4G30 AS C5 P6-A | 3 | 168,49 | 88,66 | C5 | 195,0 | 200 | 4"1/8 | 2"1/8 | 6200 | 2330 | 1900 | 3110 |
| MHV SH 3PHT/D4DJ300 AS C5 P6-A | 3 | 180,92 | 87,64 | C5 | 192,0 | 200 | 4"1/8 | 2"1/8 | 6200 | 2330 | 1900 | 3160 |

*(1)* **A** *: Evaporation temperature* **0°C** */ Ambient temperature* **+32°C** *- Superheating: 10K - Subcooling: 3K.*
**AS** *: Evaporation temperature* **0°C** */ Ambient temperature* **+42°C** *- Superheating: 10K - Subcooling: 3K.*

## MULTIHAVANE - Octagon

| | PR2 | BP1 | BPS | CDP | HPG | HPS | BAC | SIL | TXL | RLS | ALR | SSD < 100 l. | BAE | COQ | GPC |
|---|---|---|---|---|---|---|---|---|---|---|---|---|---|---|---|
| MHV OCT 2 ... | - | O | O | - | O | O | - | - | O | O | O | O | O | - | O |
| MHV OCT 3 ... | - | O | O | O | O | O | O | - | O | O | O | O | O | - | O |
| MHV OCT 4 ... | - | O | O | O | O | O | O | - | O | O | O | O | O | - | O |

## MULTIHAVANE - Scroll

| | PR2 | BP1 | BPS | CDP | HPG | HPS | BAC | SIL | TXL | RLS | ALR | SSD < 100 l. | BAE | COQ | GPC |
|---|---|---|---|---|---|---|---|---|---|---|---|---|---|---|---|
| MHV SC 2 ... | - | O | O | - | O | - | - | - | S | O | O | O | O | O | O |
| MHV SC 3 ... | - | O | O | O | O | O | - | - | S | O | O | O | O | O | O |
| MHV SC 4 ... | - | O | O | O | O | O | - | - | S | O | O | O | O | O | O |

## MULTIHAVANE - Semi-Hermetic

| | PR2 | BP1 | BPS | CDP | HPG | HPS | BAC | SIL | TXL | RLS | ALR | SSD < 100 l. | BAE | COQ | GPC |
|---|---|---|---|---|---|---|---|---|---|---|---|---|---|---|---|
| MHV SH ... | O | O | O | O | O | O | O | O | O | O | O | O | O | - | O |

**S** *: Standard*

## MULTIHAVANE - Standard

Chill range

| MULTIHAVANE OCT | Comp. | Capacity | Input power | Casing | Input current | Receiver capacity | Suction | Liquid | Dimensions | | | Net weight |
|---|---|---|---|---|---|---|---|---|---|---|---|---|
| | Nb | kW (1) | kW (1) | Type | A max. | l. | Ø | Ø | L | P | H | kg |
| MHV OCT 2P/4EC4 A C1 L2-5 | 2 | 20,60 | 10,97 | C1 | 22,8 | 50 | 1"5/8 | 7/8" | 2995 | 920 | 1190 | 790 |
| MHV OCT 2P/4DC5 A C1 L2-6 | 2 | 26,85 | 14,96 | C1 | 31,6 | 53 | 1"5/8 | 7/8" | 3475 | 920 | 1190 | 890 |
| MHV OCT 2P/4CC6 A C1 L2-6 | 2 | 31,09 | 17,77 | C1 | 36,4 | 53 | 1"5/8 | 7/8" | 3475 | 920 | 1190 | 910 |
| MHV OCT 2P/4TCS8 A C1 L3-6 | 2 | 40,90 | 19,94 | C1 | 37,3 | 54 | 2"1/8 | 1"1/8 | 4375 | 920 | 1190 | 1010 |
| MHV OCT 2P/4PCS10 A C1 L3-6 | 2 | 47,37 | 25,75 | C1 | 48,9 | 56 | 2"1/8 | 1"1/8 | 4375 | 920 | 1190 | 1030 |
| MHV OCT 2P/4NCS12 A C2 L2-A | 2 | 55,80 | 28,64 | C2 | 56,6 | 53 | 2"1/8 | 1"1/8 | 4100 | 1230 | 1420 | 1260 |
| MHV OCT 3P/4EC4 A C3 L2-A | 3 | 34,07 | 18,06 | C3 | 40,7 | 52 | 1"5/8 | 7/8" | 4400 | 1250 | 1900 | 1540 |
| MHV OCT 3P/4DC5 A C3 L2-A | 3 | 40,29 | 21,44 | C3 | 49,1 | 52 | 2"1/8 | 1"1/8 | 4400 | 1250 | 1900 | 1500 |
| MHV OCT 3P/4CC6 A C3 L2-A | 3 | 49,00 | 25,30 | C3 | 56,3 | 52 | 2"1/8 | 1"1/8 | 4400 | 1250 | 1900 | 1580 |
| MHV OCT 3P/4TCS8 A C3 L2-A | 3 | 61,29 | 32,60 | C3 | 63,0 | 57 | 2"1/8 | 1"1/8 | 4400 | 1250 | 1900 | 1710 |
| MHV OCT 3P/4PCS10 A C3 L2-A | 3 | 71,82 | 37,11 | C3 | 75,0 | 59 | 2"5/8 | 1"3/8 | 4400 | 1250 | 1900 | 1810 |
| MHV OCT 3P/4NCS12 A C3 L2-B | 3 | 81,07 | 42,78 | C3 | 84,0 | 60 | 2"5/8 | 1"3/8 | 5000 | 1250 | 1900 | 1850 |
| MHV OCT 4P/4EC4 A C5 P4-A | 4 | 44,30 | 20,73 | C5 | 44,7 | 44 | 2"1/8 | 1"1/8 | 5000 | 2330 | 1900 | 2180 |
| MHV OCT 4P/4DC5 A C5 P4-A | 4 | 52,56 | 25,36 | C5 | 56,6 | 46 | 2"1/8 | 1"1/8 | 5000 | 2330 | 1900 | 2190 |
| MHV OCT 4P/4CC6 A C5 P4-A | 4 | 65,41 | 32,38 | C5 | 73,4 | 49 | 2"1/8 | 1"1/8 | 5000 | 2330 | 1900 | 2290 |
| MHV OCT 4P/4TCS8 A C5 P4-A | 4 | 81,62 | 39,41 | C5 | 72,8 | 49 | 2"5/8 | 1"3/8 | 5000 | 2330 | 1900 | 2540 |
| MHV OCT 4P/4PCS10 A C5 P4-A | 4 | 99,26 | 49,17 | C5 | 101,2 | 56 | 2"5/8 | 1"3/8 | 5000 | 2330 | 1900 | 2510 |
| MHV OCT 4P/4NCS12 A C5 P4-A | 4 | 111,60 | 57,29 | C5 | 113,2 | 56 | 2"5/8 | 1"3/8 | 5000 | 2330 | 1900 | 2520 |

## MULTIHAVANE - Oversized condenser

Chill range

| | | | | | | | | | | | | |
|---|---|---|---|---|---|---|---|---|---|---|---|---|
| MHV OCT 2P/4EC4 AS C1 L2-6 | 2 | 18,31 | 13,53 | C1 | 26,0 | 53 | 1"5/8 | 7/8" | 3475 | 920 | 1190 | 830 |
| MHV OCT 2P/4DC5 AS C1 L2-6 | 2 | 21,65 | 15,96 | C1 | 31,6 | 53 | 1"5/8 | 7/8" | 3475 | 920 | 1190 | 890 |
| MHV OCT 2P/4CC6 AS C1 L3-6 | 2 | 26,70 | 17,36 | C1 | 35,1 | 53 | 1"5/8 | 7/8" | 4375 | 920 | 1190 | 970 |
| MHV OCT 2P/4TCS8 AS C1 L3-6 | 2 | 33,69 | 23,83 | C1 | 40,9 | 55 | 2"1/8 | 1"1/8 | 4375 | 920 | 1190 | 1020 |
| MHV OCT 2P/4PCS10 AS C2 L2-A | 2 | 40,42 | 27,24 | C2 | 54,0 | 57 | 2"1/8 | 1"1/8 | 4100 | 1230 | 1420 | 1250 |
| MHV OCT 2P/4NCS12 AS C2 L2-A | 2 | 47,03 | 31,45 | C2 | 60,0 | 59 | 2"1/8 | 1"1/8 | 4100 | 1230 | 1420 | 1310 |
| MHV OCT 3P/4EC4 AS C3 L2-A | 3 | 27,42 | 19,30 | C3 | 40,7 | 52 | 1"5/8 | 7/8" | 4400 | 1250 | 1900 | 1540 |
| MHV OCT 3P/4DC5 AS C3 L2-A | 3 | 33,95 | 22,87 | C3 | 49,1 | 52 | 2"1/8 | 1"1/8 | 4400 | 1250 | 1900 | 1560 |
| MHV OCT 3P/4CC6 AS C3 L2-A | 3 | 40,03 | 28,72 | C3 | 59,7 | 56 | 2"1/8 | 1"1/8 | 4400 | 1250 | 1900 | 1580 |
| MHV OCT 3P/4TCS8 AS C3 L2-B | 3 | 51,37 | 33,83 | C3 | 63,0 | 59 | 2"1/8 | 1"1/8 | 5000 | 1250 | 1900 | 1790 |
| MHV OCT 3P/4PCS10 AS C3 L3-A | 3 | 60,66 | 40,91 | C3 | 81,0 | 59 | 2"5/8 | 1"3/8 | 5600 | 1250 | 1900 | 1970 |
| MHV OCT 3P/4NCS12 AS C3 L3-A | 3 | 69,67 | 47,25 | C3 | 90,0 | 59 | 2"5/8 | 1"3/8 | 5600 | 1250 | 1900 | 2050 |
| MHV OCT 4P/4EC4 AS C5 P4-A | 4 | 35,79 | 22,41 | C5 | 45,4 | 44 | 2"1/8 | 1"1/8 | 5000 | 2330 | 1900 | 2180 |
| MHV OCT 4P/4DC5 AS C5 P4-A | 4 | 45,28 | 29,16 | C5 | 63,8 | 49 | 2"1/8 | 1"1/8 | 5000 | 2330 | 1900 | 2260 |
| MHV OCT 4P/4CC6 AS C5 P4-A | 4 | 53,30 | 34,25 | C5 | 68,4 | 48 | 2"1/8 | 1"1/8 | 5000 | 2330 | 1900 | 2340 |
| MHV OCT 4P/4TCS8 AS C5 P4-A | 4 | 70,57 | 45,61 | C5 | 85,2 | 55 | 2"5/8 | 1"3/8 | 5000 | 2330 | 1900 | 2490 |
| MHV OCT 4P/4PCS10 AS C5 P4-A | 4 | 81,99 | 52,04 | C5 | 101,2 | 56 | 2"5/8 | 1"3/8 | 5000 | 2330 | 1900 | 2560 |
| MHV OCT 4P/4NCS12 AS C5 P4-A | 4 | 92,21 | 60,47 | C5 | 113,2 | 56 | 2"5/8 | 1"3/8 | 5000 | 2330 | 1900 | 2570 |

## MULTIHAVANE - Low noise

Chill range

| MULTIHAVANE OCT | Comp. | Capacity | Input power | Casing | Input current | Acoustic Lp at 10 m | Receiver capacity | Suction | Liquid | Dimensions | | | Net weight |
|---|---|---|---|---|---|---|---|---|---|---|---|---|---|
| | Nb | kW (1) | kW (1) | Type | A max. | dB(A) (2) | l. | Ø | Ø | L | P | H | kg |
| MHV OCT 2P/4EC4 ALN C2 L2-A | 2 | 22,80 | 10,29 | C2 | 22,7 | 33 | 40 | 1"5/8 | 7/8" | 4100 | 1230 | 1420 | 1220 |
| MHV OCT 2P/4DC5 ALN C2 L2-A | 2 | 26,99 | 12,54 | C2 | 28,3 | 34 | 50 | 1"5/8 | 7/8" | 4100 | 1230 | 1420 | 1290 |
| MHV OCT 2P/4CC6 ALN C2 L2-A | 2 | 32,71 | 16,19 | C2 | 36,7 | 43 | 50 | 1"5/8 | 7/8" | 4100 | 1230 | 1420 | 1310 |
| MHV OCT 2P/4TCS8 ALN C2 L2-B | 2 | 44,02 | 19,80 | C2 | 38,9 | 43 | 68 | 2"1/8 | 1"1/8 | 4700 | 1230 | 1420 | 1540 |
| MHV OCT 2P/4PCS10 ALN C2 L2-B | 2 | 50,03 | 22,82 | C2 | 46,9 | 44 | 68 | 2"1/8 | 1"1/8 | 4700 | 1230 | 1420 | 1550 |
| MHV OCT 2P/4NCS12 ALN C2 L2-B | 2 | 56,27 | 26,87 | C2 | 52,9 | 44 | 68 | 2"1/8 | 1"1/8 | 4700 | 1230 | 1420 | 1560 |
| MHV OCT 3P/4EC4 ALN C3 L2-A | 3 | 33,21 | 16,63 | C3 | 37,0 | 43 | 50 | 1"5/8 | 7/8" | 4400 | 1250 | 1900 | 1740 |
| MHV OCT 3P/4DC5 ALN C3 L2-A | 3 | 39,09 | 20,08 | C3 | 45,4 | 43 | 68 | 2"1/8 | 1"1/8 | 4400 | 1250 | 1900 | 1700 |
| MHV OCT 3P/4CC6 ALN C3 L3-A | 3 | 49,08 | 24,28 | C3 | 55,1 | 45 | 68 | 2"1/8 | 1"1/8 | 5600 | 1250 | 1900 | 1930 |
| MHV OCT 3P/4TCS8 ALN C3 L3-A | 3 | 61,2 | 29,51 | C3 | 54,6 | 41 | 68 | 2"1/8 | 1"1/8 | 5600 | 1250 | 1900 | 2060 |
| MHV OCT 3P/4PCS10 ALN C3 L3-A | 3 | 71,83 | 34,71 | C3 | 70,4 | 46 | 98 | 2"5/8 | 1"3/8 | 5600 | 1250 | 1900 | 2150 |
| MHV OCT 3P/4NCS12 ALN C3 L3-A | 3 | 82,07 | 40,73 | C3 | 79,4 | 46 | 98 | 2"5/8 | 1"3/8 | 5600 | 1250 | 1900 | 2300 |
| MHV OCT 4P/4EC4 ALN C5 P4-A | 4 | 44,30 | 20,73 | C5 | 44,7 | 35 | 68 | 2"1/8 | 1"1/8 | 5000 | 2330 | 1900 | 2470 |
| MHV OCT 4P/4DC5 ALN C5 P4-A | 4 | 52,56 | 25,36 | C5 | 56,6 | 37 | 68 | 2"1/8 | 1"1/8 | 5000 | 2330 | 1900 | 2480 |
| MHV OCT 4P/4CC6 ALN C5 P4-A | 4 | 65,41 | 32,38 | C5 | 73,4 | 46 | 68 | 2"1/8 | 1"1/8 | 5000 | 2330 | 1900 | 2580 |
| MHV OCT 4P/4TCS8 ALN C5 P4-A | 4 | 81,62 | 39,41 | C5 | 72,8 | 42 | 98 | 2"5/8 | 1"3/8 | 5000 | 2330 | 1900 | 2830 |
| MHV OCT 4P/4PCS10 ALN C5 P6-A | 4 | 99,42 | 47,15 | C5 | 98,7 | 48 | 98 | 2"5/8 | 1"3/8 | 6200 | 2330 | 1900 | 3110 |
| MHV OCT 4P/4NCS12 ALN C5 P6-A | 4 | 111,81 | 55,26 | C5 | 110,7 | 49 | 98 | 2"5/8 | 1"3/8 | 6200 | 2330 | 1900 | 3120 |

*(1)* **A** *: Evaporation temperature* **-10°C** */ Ambient temperature* **+32°C** *- Superheating: 10K - Subcooling: 3K.*
**AS** *: Evaporation temperature* **-10°C** */ Ambient temperature* **+42°C** *- Superheating: 10K - Subcooling: 3K.*
**ALN** *: Evaporation temperature* **-10°C** */ Ambient temperature* **+32°C** *- Superheating: 10K - Subcooling: 3K.*
*(1) Sound pressure in dB(A) measured at 10 m, line of sight in a reflective surface, in accordance with standard EN 13487 (parallelepiped reference surface).*

## MULTIHAVANE - Standard

Chill range

| MULTIHAVANE SC | Comp. | Capacity | Input power | Casing | Input current | Receiver capacity | Suction | Liquid | Dimensions | | | Net weight |
|---|---|---|---|---|---|---|---|---|---|---|---|---|
| | Nb | kW (1) | kW (1) | Type | A max. | l. | Ø | Ø | L | P | H | kg |
| MHV SC 2P/ZB38 A C1 L2-5 | 2 | 17,10 | 8,81 | C1 | 27,0 | 40 | 1"5/8 | 7/8" | 2995 | 920 | 1190 | 710 |
| MHV SC 2P/ZB45 A C1 L2-5 | 2 | 19,88 | 10,11 | C1 | 27,6 | 40 | 1"5/8 | 7/8" | 2995 | 920 | 1190 | 720 |
| MHV SC 2P/ZB50 A C1 L2-6 | 2 | 24,14 | 11,82 | C1 | 31,4 | 50 | 1"5/8 | 7/8" | 3475 | 920 | 1190 | 840 |
| MHV SC 2P/ZB66 A C1 L2-6 | 2 | 30,33 | 16,46 | C1 | 39,6 | 50 | 1"5/8 | 7/8" | 3475 | 920 | 1190 | 850 |
| MHV SC 2P/ZB76 A C1 L2-6 | 2 | 34,81 | 19,10 | C1 | 45,4 | 68 | 2"1/8 | 7/8" | 3475 | 920 | 1190 | 810 |
| MHV SC 2P/ZB95 A C1 L3-6 | 2 | 43,05 | 21,97 | C1 | 59,7 | 68 | 2"1/8 | 1"1/8 | 4375 | 920 | 1190 | 870 |
| MHV SC 2P/ZB114 A C1 L3-6 | 2 | 50,46 | 29,28 | C1 | 73,5 | 68 | 2"1/8 | 1"1/8 | 4375 | 920 | 1190 | 890 |
| MHV SC 3P/ZB38 A C3 L2-A | 3 | 27,93 | 14,22 | C3 | 47,0 | 50 | 1"5/8 | 7/8" | 4400 | 1250 | 1900 | 1430 |
| MHV SC 3P/ZB45 A C3 L2-A | 3 | 32,29 | 16,08 | C3 | 47,9 | 50 | 1"5/8 | 7/8" | 4400 | 1250 | 1900 | 1430 |
| MHV SC 3P/ZB50 A C3 L2-A | 3 | 37,51 | 18,90 | C3 | 52,4 | 68 | 2"1/8 | 1"1/8 | 4400 | 1250 | 1900 | 1430 |
| MHV SC 3P/ZB66 A C3 L2-A | 3 | 47,41 | 22,92 | C3 | 61,1 | 68 | 2"1/8 | 1"1/8 | 4400 | 1250 | 1900 | 1490 |
| MHV SC 3P/ZB76 A C3 L2-A | 3 | 54,71 | 26,57 | C3 | 69,8 | 68 | 2"1/8 | 1"1/8 | 4400 | 1250 | 1900 | 1520 |
| MHV SC 3P/ZB95 A C3 L2-A | 3 | 66,11 | 35,04 | C3 | 96,6 | 68 | 2"5/8 | 1"1/8 | 4400 | 1250 | 1900 | 1570 |
| MHV SC 3P/ZB114 A C3 L2-B | 3 | 77,34 | 41,29 | C3 | 111,9 | 98 | 2"5/8 | 1"3/8 | 5000 | 1250 | 1900 | 1620 |
| MHV SC 4P/ZB50 A C5 P4-A | 4 | 49,10 | 22,21 | C5 | 61,0 | 68 | 2"1/8 | 1"1/8 | 5000 | 2330 | 1900 | 2110 |
| MHV SC 4P/ZB66 A C5 P4-A | 4 | 60,67 | 28,62 | C5 | 74,6 | 68 | 2"1/8 | 1"1/8 | 5000 | 2330 | 1900 | 2110 |
| MHV SC 4P/ZB76 A C5 P4-A | 4 | 73,09 | 34,02 | C5 | 91,4 | 68 | 2"5/8 | 1"1/8 | 5000 | 2330 | 1900 | 2210 |
| MHV SC 4P/ZB95 A C5 P4-A | 4 | 89,60 | 43,95 | C5 | 122,8 | 98 | 2"5/8 | 1"3/8 | 5000 | 2330 | 1900 | 2170 |
| MHV SC 4P/ZB114 A C5 P4-A | 4 | 106,30 | 54,28 | C5 | 150,4 | 98 | 2"5/8 | 1"3/8 | 5000 | 2330 | 1900 | 2240 |

## MULTIHAVANE - Oversized condenser

Chill range

| | | | | | | | | | | | | |
|---|---|---|---|---|---|---|---|---|---|---|---|---|
| MHV SC 2P/ZB38 AS C1 L2-6 | 2 | 15,04 | 10,21 | C1 | 27,8 | 40 | 1"5/8 | 7/8" | 3475 | 920 | 1190 | 730 |
| MHV SC 2P/ZB45 AS C1 L2-6 | 2 | 17,25 | 11,82 | C1 | 28,4 | 40 | 1"5/8 | 7/8" | 3475 | 920 | 1190 | 740 |
| MHV SC 2P/ZB50 AS C1 L2-6 | 2 | 20,22 | 15,88 | C1 | 33,8 | 50 | 1"5/8 | 7/8" | 3475 | 920 | 1190 | 850 |
| MHV SC 2P/ZB66 AS C1 L3-6 | 2 | 26,85 | 19,77 | C1 | 41,9 | 50 | 1"5/8 | 7/8" | 4375 | 920 | 1190 | 920 |
| MHV SC 2P/ZB76 AS C1 L3-6 | 2 | 31,02 | 22,55 | C1 | 47,7 | 68 | 2"1/8 | 7/8" | 4375 | 920 | 1190 | 880 |
| MHV SC 2P/ZB95 AS C2 L2-A | 2 | 37,67 | 28,26 | C2 | 68,4 | 68 | 2"1/8 | 1"1/8 | 4100 | 1230 | 1420 | 1100 |
| MHV SC 2P/ZB114 AS C2 L2-A | 2 | 43,94 | 33,54 | C2 | 78,6 | 68 | 2"1/8 | 1"1/8 | 4100 | 1230 | 1420 | 1160 |
| MHV SC 3P/ZB38 AS C3 L2-A | 3 | 23,12 | 16,84 | C3 | 47,0 | 50 | 1"5/8 | 7/8" | 4400 | 1250 | 1900 | 1430 |
| MHV SC 3P/ZB45 AS C3 L2-A | 3 | 26,74 | 19,09 | C3 | 47,9 | 50 | 1"5/8 | 7/8" | 4400 | 1250 | 1900 | 1430 |
| MHV SC 3P/ZB50 AS C3 L2-A | 3 | 31,63 | 22,27 | C3 | 52,4 | 68 | 2"1/8 | 1"1/8 | 4400 | 1250 | 1900 | 1490 |
| MHV SC 3P/ZB66 AS C3 L2-A | 3 | 39,44 | 28,54 | C3 | 64,5 | 68 | 2"1/8 | 1"1/8 | 4400 | 1250 | 1900 | 1490 |
| MHV SC 3P/ZB76 AS C3 L2-A | 3 | 46,40 | 32,51 | C3 | 73,2 | 68 | 2"1/8 | 1"1/8 | 4400 | 1250 | 1900 | 1570 |
| MHV SC 3P/ZB95 AS C3 L3-A | 3 | 56,38 | 42,51 | C3 | 102,6 | 68 | 2"5/8 | 1"1/8 | 5600 | 1250 | 1900 | 1730 |
| MHV SC 3P/ZB114 AS C3 L3-A | 3 | 65,98 | 50,23 | C3 | 117,9 | 98 | 2"5/8 | 1"3/8 | 5600 | 1250 | 1900 | 1820 |
| MHV SC 4P/ZB50 AS C5 P4-A | 4 | 42,17 | 28,36 | C5 | 68,2 | 68 | 2"1/8 | 1"1/8 | 5000 | 2330 | 1900 | 2180 |
| MHV SC 4P/ZB66 AS C5 P4-A | 4 | 52,29 | 35,16 | C5 | 79,8 | 68 | 2"1/8 | 1"1/8 | 5000 | 2330 | 1900 | 2180 |
| MHV SC 4P/ZB76 AS C5 P4-A | 4 | 62,58 | 39,81 | C5 | 91,4 | 68 | 2"5/8 | 1"1/8 | 5000 | 2330 | 1900 | 2260 |
| MHV SC 4P/ZB95 AS C5 P4-A | 4 | 74,72 | 54,28 | C5 | 130,0 | 98 | 2"5/8 | 1"3/8 | 5000 | 2330 | 1900 | 2230 |
| MHV SC 4P/ZB114 AS C5 P4-A | 4 | 87,28 | 64,74 | C5 | 150,4 | 98 | 2"5/8 | 1"3/8 | 5000 | 2330 | 1900 | 2390 |

## MULTIHAVANE - Low noise

Chill range

| MULTIHAVANE SC | Comp. | Capacity | Input power | Casing | Input current | Acoustic Lp at 10 m | Receiver capacity | Suction | Liquid | Dimensions | | | Net weight |
|---|---|---|---|---|---|---|---|---|---|---|---|---|---|
| | Nb | kW (1) | kW (1) | Type | A max. | dB(A) (2) | l. | Ø | Ø | L | P | H | kg |
| MHV SC 2P/ZB38 ALN C1 L3-6 | 2 | 18,01 | 8,14 | C1 | 27,1 | 38 | 40 | 1"5/8 | 7/8" | 4375 | 920 | 1190 | 880 |
| MHV SC 2P/ZB45 ALN C1 L3-6 | 2 | 20,69 | 9,50 | C1 | 27,7 | 38 | 40 | 1"5/8 | 7/8" | 4375 | 920 | 1190 | 890 |
| MHV SC 2P/ZB50 ALN C2 L2-A | 2 | 25,10 | 10,82 | C2 | 30,5 | 36 | 50 | 1"5/8 | 7/8" | 4100 | 1230 | 1420 | 1250 |
| MHV SC 2P/ZB66 ALN C2 L2-A | 2 | 31,63 | 14,60 | C2 | 39,9 | 44 | 50 | 1"5/8 | 7/8" | 4100 | 1230 | 1420 | 1250 |
| MHV SC 2P/ZB76 ALN C2 L2-A | 2 | 36,54 | 17,01 | C2 | 45,7 | 44 | 68 | 2"1/8 | 7/8" | 4100 | 1230 | 1420 | 1210 |
| MHV SC 2P/ZB95 ALN C2 L2-B | 2 | 46,31 | 20,67 | C2 | 61,3 | 44 | 68 | 2"1/8 | 1"1/8 | 4700 | 1230 | 1420 | 1400 |
| MHV SC 2P/ZB114 ALN C2 L2-B | 2 | 53,60 | 25,22 | C2 | 71,5 | 45 | 68 | 2"1/8 | 1"1/8 | 4700 | 1230 | 1420 | 1410 |
| MHV SC 3P/ZB38 ALN C3 L2-A | 3 | 26,58 | 12,12 | C3 | 39,7 | 35 | 50 | 1"5/8 | 7/8" | 4400 | 1250 | 1900 | 1630 |
| MHV SC 3P/ZB45 ALN C3 L2-A | 3 | 31,64 | 14,82 | C3 | 44,2 | 43 | 50 | 1"5/8 | 7/8" | 4400 | 1250 | 1900 | 1630 |
| MHV SC 3P/ZB50 ALN C3 L2-A | 3 | 36,57 | 17,79 | C3 | 48,7 | 44 | 68 | 2"1/8 | 1"1/8 | 4400 | 1250 | 1900 | 1630 |
| MHV SC 3P/ZB66 ALN C3 L3-A | 3 | 47,46 | 21,89 | C3 | 59,9 | 46 | 68 | 2"1/8 | 1"1/8 | 5600 | 1250 | 1900 | 1840 |
| MHV SC 3P/ZB76 ALN C3 L3-A | 3 | 54,84 | 25,50 | C3 | 68,6 | 46 | 68 | 2"1/8 | 1"1/8 | 5600 | 1250 | 1900 | 1870 |
| MHV SC 3P/ZB95 ALN C3 L3-A | 3 | 66,94 | 32,22 | C3 | 92,0 | 46 | 68 | 2"5/8 | 1"1/8 | 5600 | 1250 | 1900 | 1870 |
| MHV SC 3P/ZB114 ALN C3 L3-A | 3 | 78,21 | 38,96 | C3 | 107,3 | 47 | 98 | 2"5/8 | 1"3/8 | 5600 | 1250 | 1900 | 2020 |
| MHV SC 4P/ZB50 ALN C5 P4-A | 4 | 48,79 | 22,27 | C5 | 61,0 | 39 | 68 | 2"1/8 | 1"1/8 | 5000 | 2330 | 1900 | 2400 |
| MHV SC 4P/ZB66 ALN C5 P4-A | 4 | 60,67 | 28,62 | C5 | 74,6 | 42 | 68 | 2"1/8 | 1"1/8 | 5000 | 2330 | 1900 | 2400 |
| MHV SC 4P/ZB76 ALN C5 P4-A | 4 | 73,09 | 34,02 | C5 | 91,4 | 47 | 68 | 2"5/8 | 1"1/8 | 5000 | 2330 | 1900 | 2500 |
| MHV SC 4P/ZB95 ALN C5 P4-A | 4 | 89,31 | 42,99 | C5 | 122,6 | 47 | 98 | 2"5/8 | 1"3/8 | 5000 | 2330 | 1900 | 2570 |
| MHV SC 4P/ZB114 ALN C5 P6-A | 4 | 106,51 | 52,18 | C5 | 147,9 | 49 | 98 | 2"5/8 | 1"3/8 | 6200 | 2330 | 1900 | 2840 |

*(1)* **A** *: Evaporation temperature* **-10°C** */ Ambient temperature* **+32°C** *- Superheating: 10K - Subcooling: 3K.*
**AS** *: Evaporation temperature* **-10°C** */ Ambient temperature* **+42°C** *- Superheating: 10K - Subcooling: 3K.*
**ALN** *: Evaporation temperature* **-10°C** */ Ambient temperature* **+32°C** *- Superheating: 10K - Subcooling: 3K.*
*(1) Sound pressure in dB(A) measured at 10 m, line of sight in a reflective surface, in accordance with standard EN 13487 (parallelepiped reference surface).*

## MULTIHAVANE - Standard

Chill range

| MULTIHAVANE SH | Comp. | Capacity | Input power | Casing | Input current | Receiver capacity | Suction | Liquid | Dimensions | | | Net weight |
|---|---|---|---|---|---|---|---|---|---|---|---|---|
| | Nb | kW (1) | kW (1) | Type | A max. | l. | Ø | Ø | L | P | H | kg |
| MHV SH 2P/4J13 A C3 L2-A | 2 | 63,05 | 34,01 | C3 | 66,0 | 68 | 2"5/8 | 1"1/8 | 4400 | 1250 | 1900 | 1650 |
| MHV SH 2P/D4DA200 A C3 L2-A | 2 | 60,91 | 28,06 | C3 | 73,6 | 68 | 2"5/8 | 1"1/8 | 4400 | 1250 | 1900 | 1700 |
| MHV SH 2P/4H15 A C3 L2-A | 2 | 73,94 | 39,77 | C3 | 74,0 | 68 | 2"5/8 | 1"1/8 | 4400 | 1250 | 1900 | 1700 |
| MHV SH 2P/D4DH250 A C3 L2-A | 2 | 77,23 | 37,04 | C3 | 95,0 | 68 | 2"5/8 | 1"1/8 | 4400 | 1250 | 1900 | 1760 |
| MHV SH 2P/4G20 A C3 L2-B | 2 | 86,44 | 44,64 | C3 | 86,0 | 98 | 3"1/8 | 1"3/8 | 5000 | 1250 | 1900 | 1890 |
| MHV SH 2P/D4DJ300 A C3 L2-B | 2 | 93,81 | 43,85 | C3 | 117,0 | 98 | 3"1/8 | 1"3/8 | 5000 | 1250 | 1900 | 1940 |
| MHV SH 2P/6H25 A C4 P4-A | 2 | 112,19 | 58,82 | C4 | 107,2 | 145 | 3"1/8 | 1"5/8 | 4400 | 2330 | 1900 | 2370 |
| MHV SH 2P/D6DH350 A C4 P4-A | 2 | 115,01 | 54,09 | C4 | 144,2 | 145 | 3"1/8 | 1"5/8 | 4400 | 2330 | 1900 | 2360 |
| MHV SH 2P/6G30 A C4 P4-A | 2 | 124,76 | 68,72 | C4 | 130,0 | 145 | 4"1/8 | 1"5/8 | 4400 | 2330 | 1900 | 2380 |
| MHV SH 2P/D6DJ400 A C4 P4-A | 2 | 134,52 | 68,13 | C4 | 190,0 | 145 | 4"1/8 | 1"5/8 | 4400 | 2330 | 1900 | 2430 |
| MHV SH 2P/6F40 A C4 P4-B | 2 | 150,24 | 78,22 | C4 | 180,0 | 200 | 4"1/8 | 1"5/8 | 5000 | 2330 | 1900 | 2580 |
| MHV SH 2P/D6SU400 A C4 P4-B | 2 | 153,91 | 82,68 | C4 | 180,0 | 200 | 4"1/8 | 1"5/8 | 5000 | 2330 | 1900 | 2670 |
| MHV SH 3P/4J13 A C5 P4-A | 3 | 96,21 | 48,10 | C5 | 91,0 | 145 | 3"1/8 | 1"3/8 | 5000 | 2330 | 1900 | 2520 |
| MHV SH 3P/D4DA200 A C5 P4-A | 3 | 93,37 | 41,06 | C5 | 107,5 | 145 | 3"1/8 | 1"3/8 | 5000 | 2330 | 1900 | 2580 |
| MHV SH 3P/4H15 A C5 P4-A | 3 | 112,46 | 58,75 | C5 | 110,2 | 145 | 3"1/8 | 1"3/8 | 5000 | 2330 | 1900 | 2560 |
| MHV SH 3P/D4DH250 A C5 P4-A | 3 | 117,47 | 54,66 | C5 | 141,7 | 145 | 3"1/8 | 1"3/8 | 5000 | 2330 | 1900 | 2640 |
| MHV SH 3P/4G20 A C5 P4-A | 3 | 126,51 | 69,85 | C5 | 135,0 | 145 | 4"1/8 | 1"5/8 | 5000 | 2330 | 1900 | 2620 |
| MHV SH 3P/D4DJ300 A C5 P4-A | 3 | 137,29 | 68,78 | C5 | 181,5 | 145 | 4"1/8 | 1"5/8 | 5000 | 2330 | 1900 | 2680 |
| MHV SH 3P/6H25 A C5 P4-B | 3 | 167,65 | 87,57 | C5 | 159,0 | 200 | 4"1/8 | 1"5/8 | 5600 | 2330 | 1900 | 2920 |
| MHV SH 3P/D6DH350 A C5 P4-B | 3 | 171,93 | 80,46 | C5 | 214,5 | 200 | 4"1/8 | 1"5/8 | 5600 | 2330 | 1900 | 2980 |
| MHV SH 3P/6G30 A C5 P6-A | 3 | 190,05 | 98,88 | C5 | 184,8 | 200 | 4"1/8 | 1"5/8 | 6200 | 2330 | 1900 | 3170 |
| MHV SH 3P/D6DJ400 A C5 P6-A | 3 | 205,26 | 97,93 | C5 | 274,8 | 200 | 4"1/8 | 1"5/8 | 6200 | 2330 | 1900 | 3270 |
| MHV SH 3P/6F40 A C5 P6-A | 3 | 223,71 | 118,73 | C5 | 270,0 | 200 | 4"1/8 | 2"1/8 | 6200 | 2330 | 1900 | 3330 |
| MHV SH 3P/D6SU400 A C5 P6-A | 3 | 228,89 | 125,49 | C5 | 270,0 | 200 | 4"1/8 | 2"1/8 | 6200 | 2330 | 1900 | 3450 |

## MULTIHAVANE - Oversized condenser

Chill range

| | | | | | | | | | | | | |
|---|---|---|---|---|---|---|---|---|---|---|---|---|
| MHV SH 2P/4J13 AS C3 L2-B | 2 | 53,74 | 35,80 | C3 | 66,0 | 68 | 2"5/8 | 1"1/8 | 5000 | 1250 | 1900 | 1730 |
| MHV SH 2P/D4DA200 AS C3 L2-A | 2 | 51,24 | 31,42 | C3 | 77,0 | 68 | 2"5/8 | 1"1/8 | 4400 | 1250 | 1900 | 1750 |
| MHV SH 2P/4H15 AS C3 L2-B | 2 | 63,15 | 42,00 | C3 | 74,0 | 68 | 2"5/8 | 1"1/8 | 5000 | 1250 | 1900 | 1830 |
| MHV SH 2P/D4DH250 AS C3 L2-B | 2 | 65,95 | 39,09 | C3 | 95,0 | 68 | 2"5/8 | 1"1/8 | 5000 | 1250 | 1900 | 1890 |
| MHV SH 2P/4G20 AS C3 L2-D | 2 | 71,93 | 47,22 | C3 | 86,0 | 98 | 3"1/8 | 1"3/8 | 6000 | 1250 | 1900 | 2000 |
| MHV SH 2P/D4DJ300 AS C3 L2-D | 2 | 79,14 | 46,78 | C3 | 117,0 | 98 | 3"1/8 | 1"3/8 | 6000 | 1250 | 1900 | 2040 |
| MHV SH 2P/6H25 AS C4 P4-A | 2 | 93,31 | 63,13 | C4 | 107,2 | 145 | 3"1/8 | 1"5/8 | 4400 | 2330 | 1900 | 2420 |
| MHV SH 2P/D6DH350 AS C4 P4-A | 2 | 97,22 | 58,15 | C4 | 144,2 | 145 | 3"1/8 | 1"5/8 | 4400 | 2330 | 1900 | 2410 |
| MHV SH 2P/6G30 AS C4 P4-A | 2 | 106,02 | 73,26 | C4 | 130,0 | 145 | 4"1/8 | 1"5/8 | 4400 | 2330 | 1900 | 2530 |
| MHV SH 2P/D6DJ400 AS C4 P4-A | 2 | 114,26 | 72,65 | C4 | 190,0 | 145 | 4"1/8 | 1"5/8 | 4400 | 2330 | 1900 | 2580 |
| MHV SH 2P/6F40 AS C4 P6-A | 2 | 128,95 | 84,04 | C4 | 181,8 | 200 | 4"1/8 | 1"5/8 | 5600 | 2330 | 1900 | 2800 |
| MHV SH 2P/D6SU400 AS C4 P6-A | 2 | 132,58 | 88,40 | C4 | 181,8 | 200 | 4"1/8 | 1"5/8 | 5600 | 2330 | 1900 | 2880 |
| MHV SH 3P/4J13 AS C5 P4-A | 3 | 81,72 | 56,12 | C5 | 105,0 | 145 | 3"1/8 | 1"3/8 | 5000 | 2330 | 1900 | 2550 |
| MHV SH 3P/D4DA200 AS C5 P4-A | 3 | 78,80 | 46,23 | C5 | 114,7 | 145 | 3"1/8 | 1"3/8 | 5000 | 2330 | 1900 | 2600 |
| MHV SH 3P/4H15 AS C5 P4-A | 3 | 93,97 | 63,05 | C5 | 110,2 | 145 | 3"1/8 | 1"3/8 | 5000 | 2330 | 1900 | 2610 |
| MHV SH 3P/D4DH250 AS C5 P4-A | 3 | 98,12 | 58,67 | C5 | 141,7 | 145 | 3"1/8 | 1"3/8 | 5000 | 2330 | 1900 | 2690 |
| MHV SH 3P/4G20 AS C5 P4-A | 3 | 106,48 | 74,12 | C5 | 135,0 | 145 | 4"1/8 | 1"5/8 | 5000 | 2330 | 1900 | 2770 |
| MHV SH 3P/D4DJ300 AS C5 P4-B | 3 | 120,85 | 72,39 | C5 | 181,5 | 145 | 4"1/8 | 1"5/8 | 5600 | 2330 | 1900 | 2850 |
| MHV SH 3P/6H25 AS C5 P6-A | 3 | 142,88 | 98,18 | C5 | 171,0 | 200 | 4"1/8 | 1"5/8 | 6200 | 2330 | 1900 | 3210 |
| MHV SH 3P/D6DH350 AS C5 P6-A | 3 | 146,78 | 91,00 | C5 | 226,5 | 200 | 4"1/8 | 1"5/8 | 6200 | 2330 | 1900 | 3270 |
| MHV SH 3P/6G30 AS C5 P6-B | 3 | 161,80 | 108,73 | C5 | 195,0 | 200 | 4"1/8 | 1"5/8 | 7100 | 2330 | 1900 | 3370 |
| MHV SH 3P/D6DJ400 AS C5 P6-B | 3 | 176,84 | 107,32 | C5 | 285,0 | 200 | 4"1/8 | 1"5/8 | 7100 | 2330 | 1900 | 3470 |
| MHV SH 3P/6F40 AS C5 P6-B | 3 | 188,70 | 125,16 | C5 | 270,0 | 200 | 4"1/8 | 2"1/8 | 7100 | 2330 | 1900 | 3450 |
| MHV SH 3P/D6SU400 AS C5 P6-B | 3 | 193,87 | 131,72 | C5 | 270,0 | 200 | 4"1/8 | 2"1/8 | 7100 | 2330 | 1900 | 3570 |

## MULTIHAVANE - Low noise

Chill range

| MULTIHAVANE SH | Comp. | Capacity | Input power | Casing | Input current | Acoustic Lp at 10 m | Receiver capacity | Suction | Liquid | Dimensions | | | Net weight |
|---|---|---|---|---|---|---|---|---|---|---|---|---|---|
| | Nb | kW (1) | kW (1) | Type | A max. | dB(A) (2) | l. | Ø | Ø | L | P | H | kg |
| MHV SH 2P/4J13 ALN C3 L2-B | 2 | 63,20 | 30,98 | C3 | 58,9 | 44 | 68 | 2"5/8 | 1"1/8 | 5000 | 1250 | 1900 | 2000 |
| MHV SH 2P/D4DA200 ALN C3 L2-B | 2 | 61,42 | 26,25 | C3 | 69,9 | 46 | 68 | 2"5/8 | 1"1/8 | 5000 | 1250 | 1900 | 2050 |
| MHV SH 2P/4H15 ALN C4 P4-A | 2 | 75,06 | 37,81 | C4 | 71,8 | 47 | 68 | 2"5/8 | 1"1/8 | 4400 | 2330 | 1900 | 2380 |
| MHV SH 2P/D4DH250 ALN C4 P4-A | 2 | 78,40 | 35,09 | C4 | 92,8 | 47 | 68 | 2"5/8 | 1"1/8 | 4400 | 2330 | 1900 | 2430 |
| MHV SH 2P/4G20 ALN C4 P4-A | 2 | 87,47 | 43,01 | C4 | 83,8 | 47 | 98 | 3"1/8 | 1"3/8 | 4400 | 2330 | 1900 | 2480 |
| MHV SH 2P/D4DJ300 ALN C4 P4-A | 2 | 94,83 | 42,20 | C4 | 114,8 | 48 | 98 | 3"1/8 | 1"3/8 | 4400 | 2330 | 1900 | 2530 |
| MHV SH 2P/6H25 ALN C4 P6-A | 2 | 112,39 | 56,77 | C4 | 104,7 | 49 | 145 | 3"1/8 | 1"5/8 | 5600 | 2330 | 1900 | 2920 |
| MHV SH 2P/D6DH350 ALN C4 P6-A | 2 | 115,20 | 52,04 | C4 | 141,7 | 50 | 145 | 3"1/8 | 1"5/8 | 5600 | 2330 | 1900 | 2910 |
| MHV SH 2P/6G30 ALN C4 P4-D | 2 | 126,07 | 62,10 | C4 | 115,8 | 48 | 145 | 4"1/8 | 1"5/8 | 6000 | 2330 | 1900 | 3000 |
| MHV SH 2P/D6DJ400 ALN C4 P4-D | 2 | 136,12 | 61,48 | C4 | 175,8 | 49 | 145 | 4"1/8 | 1"5/8 | 6000 | 2330 | 1900 | 3050 |
| MHV SH 3P/4J13 ALN C5 P6-A | 3 | 99,28 | 47,72 | C5 | 95,7 | 48 | 145 | 3"1/8 | 1"3/8 | 6200 | 2330 | 1900 | 3140 |
| MHV SH 3P/D4DA200 ALN C5 P6-A | 3 | 96,10 | 40,76 | C5 | 112,2 | 49 | 145 | 3"1/8 | 1"3/8 | 6200 | 2330 | 1900 | 3200 |
| MHV SH 3P/4H15 ALN C5 P6-A | 3 | 112,66 | 56,71 | C5 | 107,7 | 48 | 145 | 3"1/8 | 1"3/8 | 6200 | 2330 | 1900 | 3160 |
| MHV SH 3P/D4DH250 ALN C5 P6-A | 3 | 117,68 | 52,62 | C5 | 139,2 | 49 | 145 | 3"1/8 | 1"3/8 | 6200 | 2330 | 1900 | 3230 |
| MHV SH 3P/4G20 ALN C5 P6-A | 3 | 130,99 | 64,57 | C5 | 125,7 | 49 | 145 | 4"1/8 | 1"5/8 | 6200 | 2330 | 1900 | 3290 |
| MHV SH 3P/D4DJ300 ALN C5 P6-A | 3 | 142,16 | 63,32 | C5 | 172,2 | 50 | 145 | 4"1/8 | 1"5/8 | 6200 | 2330 | 1900 | 3350 |

*(1)* **A** *: Evaporation temperature* **-10°C** */ Ambient temperature* **+32°C** *- Superheating: 10K - Subcooling: 3K.*
**AS** *: Evaporation temperature* **-10°C** */ Ambient temperature* **+42°C** *- Superheating: 10K - Subcooling: 3K.*
**ALN** *: Evaporation temperature* **-10°C** */ Ambient temperature* **+32°C** *- Superheating: 10K - Subcooling: 3K.*
*(1) Sound pressure in dB(A) measured at 10 m, line of sight in a reflective surface, in accordance with standard EN 13487 (parallelepiped reference surface).*

## MULTIHAVANE - Standard

Low temperature range

| MULTIHAVANE OCT | Comp. | Capacity | Input power | Casing | Input current | Receiver capacity | Suction | Liquid | Dimensions | | | Net weight |
|---|---|---|---|---|---|---|---|---|---|---|---|---|
| | Nb | kW (1) | kW (1) | Type | A max. | l. | Ø | Ø | L | P | H | kg |
| MHV OCT 2N/4EC4 A C1 L2-5 | 2 | 6,18 | 6,18 | C1 | 22,8 | 50 | 1"3/8 | 5/8" | 2995 | 920 | 1190 | 800 |
| MHV OCT 2N/4DC5 A C1 L2-5 | 2 | 7,31 | 7,32 | C1 | 28,4 | 50 | 1"3/8 | 5/8" | 2995 | 920 | 1190 | 800 |
| MHV OCT 2N/4CC6 A C1 L2-5 | 2 | 9,04 | 8,55 | C1 | 33,2 | 51 | 1"5/8 | 5/8" | 2995 | 920 | 1190 | 820 |
| MHV OCT 2N/4TCS8 A C1 L2-5 | 2 | 10,75 | 9,96 | C1 | 35,4 | 53 | 1"5/8 | 5/8" | 2995 | 920 | 1190 | 970 |
| MHV OCT 2N/4PCS10 A C1 L2-6 | 2 | 13,11 | 11,50 | C1 | 44,2 | 55 | 1"5/8 | 5/8" | 3475 | 920 | 1190 | 1010 |
| MHV OCT 2N/4NCS12 A C1 L2-6 | 2 | 14,74 | 13,27 | C1 | 50,2 | 56 | 2"1/8 | 7/8" | 3475 | 920 | 1190 | 970 |
| MHV OCT 3N/4EC4 A C3 L2-A | 3 | 9,29 | 8,15 | C3 | 32,6 | 45 | 1"5/8 | 5/8" | 4400 | 1250 | 1900 | 1390 |
| MHV OCT 3N/4DC5 A C3 L2-A | 3 | 11,57 | 10,05 | C3 | 41,8 | 47 | 1"5/8 | 5/8" | 4400 | 1250 | 1900 | 1460 |
| MHV OCT 3N/4CC6 A C3 L2-A | 3 | 13,72 | 12,23 | C3 | 49,0 | 49 | 1"5/8 | 5/8" | 4400 | 1250 | 1900 | 1480 |
| MHV OCT 3N/4TCS8 A C3 L2-A | 3 | 16,38 | 14,36 | C3 | 52,3 | 52 | 2"1/8 | 7/8" | 4400 | 1250 | 1900 | 1560 |
| MHV OCT 3N/4PCS10 A C3 L2-A | 3 | 20,36 | 19,15 | C3 | 71,6 | 56 | 2"1/8 | 7/8" | 4400 | 1250 | 1900 | 1690 |
| MHV OCT 3N/4NCS12 A C3 L2-A | 3 | 23,02 | 21,80 | C3 | 80,6 | 57 | 2"1/8 | 7/8" | 4400 | 1250 | 1900 | 1690 |
| MHV OCT 4N/4EC4 A C5 P4-A | 4 | 13,18 | 11,01 | C5 | 43,8 | 46 | 1"5/8 | 5/8" | 5000 | 2330 | 1900 | 2270 |
| MHV OCT 4N/4DC5 A C5 P4-A | 4 | 15,76 | 13,27 | C5 | 55,0 | 48 | 2"1/8 | 7/8" | 5000 | 2330 | 1900 | 2220 |
| MHV OCT 4N/4CC6 A C5 P4-A | 4 | 18,78 | 16,14 | C5 | 64,6 | 50 | 2"1/8 | 7/8" | 5000 | 2330 | 1900 | 2240 |
| MHV OCT 4N/4TCS8 A C5 P4-A | 4 | 23,53 | 19,36 | C5 | 69,9 | 53 | 2"1/8 | 7/8" | 5000 | 2330 | 1900 | 2420 |
| MHV OCT 4N/4PCS10 A C5 P4-A | 4 | 26,46 | 21,92 | C5 | 85,9 | 55 | 2"5/8 | 1"1/8 | 5000 | 2330 | 1900 | 2450 |
| MHV OCT 4N/4NCS12 A C5 P4-A | 4 | 30,03 | 25,57 | C5 | 98,6 | 57 | 2"5/8 | 1"1/8 | 5000 | 2330 | 1900 | 2450 |

## MULTIHAVANE - Oversized condenser

Low temperature range

| | | | | | | | | | | | | |
|---|---|---|---|---|---|---|---|---|---|---|---|---|
| MHV OCT 2N/4EC4 AS C1 L2-5 | 2 | 4,50 | 6,11 | C1 | 22,8 | 50 | 1"3/8 | 5/8" | 2995 | 920 | 1190 | 800 |
| MHV OCT 2N/4DC5 AS C1 L2-5 | 2 | 5,34 | 7,32 | C1 | 28,4 | 50 | 1"3/8 | 5/8" | 2995 | 920 | 1190 | 800 |
| MHV OCT 2N/4CC6 AS C1 L2-5 | 2 | 6,61 | 8,66 | C1 | 33,2 | 51 | 1"5/8 | 5/8" | 2995 | 920 | 1190 | 820 |
| MHV OCT 2N/4TCS8 AS C1 L2-6 | 2 | 8,49 | 10,07 | C1 | 36,2 | 54 | 1"5/8 | 5/8" | 3475 | 920 | 1190 | 1000 |
| MHV OCT 2N/4PCS10 AS C1 L2-6 | 2 | 9,56 | 11,10 | C1 | 44,2 | 55 | 1"5/8 | 5/8" | 3475 | 920 | 1190 | 1010 |
| MHV OCT 2N/4NCS12 AS C1 L2-6 | 2 | 10,69 | 12,95 | C1 | 50,2 | 56 | 2"1/8 | 7/8" | 3475 | 920 | 1190 | 970 |
| MHV OCT 3N/4EC4 AS C3 L2-A | 3 | 6,76 | 8,05 | C3 | 32,6 | 45 | 1"5/8 | 5/8" | 4400 | 1250 | 1900 | 1390 |
| MHV OCT 3N/4DC5 AS C3 L2-A | 3 | 8,46 | 10,06 | C3 | 41,8 | 47 | 1"5/8 | 5/8" | 4400 | 1250 | 1900 | 1460 |
| MHV OCT 3N/4CC6 AS C3 L2-A | 3 | 10,04 | 12,39 | C3 | 49,0 | 49 | 1"5/8 | 5/8" | 4400 | 1250 | 1900 | 1480 |
| MHV OCT 3N/4TCS8 AS C3 L2-A | 3 | 12,86 | 15,97 | C3 | 56,0 | 53 | 2"1/8 | 7/8" | 4400 | 1250 | 1900 | 1670 |
| MHV OCT 3N/4PCS10 AS C3 L2-A | 3 | 14,87 | 18,59 | C3 | 71,6 | 56 | 2"1/8 | 7/8" | 4400 | 1250 | 1900 | 1690 |
| MHV OCT 3N/4NCS12 AS C3 L2-A | 3 | 16,70 | 21,33 | C3 | 80,6 | 57 | 2"1/8 | 7/8" | 4400 | 1250 | 1900 | 1690 |
| MHV OCT 4N/4EC4 AS C5 P4-A | 4 | 9,61 | 10,90 | C5 | 43,8 | 46 | 1"5/8 | 5/8" | 5000 | 2330 | 1900 | 2270 |
| MHV OCT 4N/4DC5 AS C5 P4-A | 4 | 11,53 | 13,28 | C5 | 55,0 | 48 | 2"1/8 | 7/8" | 5000 | 2330 | 1900 | 2220 |
| MHV OCT 4N/4CC6 AS C5 P4-A | 4 | 13,78 | 16,37 | C5 | 64,6 | 50 | 2"1/8 | 7/8" | 5000 | 2330 | 1900 | 2240 |
| MHV OCT 4N/4TCS8 AS C5 P4-A | 4 | 17,1 | 19,05 | C5 | 69,9 | 53 | 2"1/8 | 7/8" | 5000 | 2330 | 1900 | 2420 |
| MHV OCT 4N/4PCS10 AS C5 P4-A | 4 | 19,28 | 21,13 | C5 | 85,9 | 55 | 2"5/8 | 1"1/8 | 5000 | 2330 | 1900 | 2450 |
| MHV OCT 4N/4NCS12 AS C5 P4-A | 4 | 21,70 | 24,92 | C5 | 98,6 | 57 | 2"5/8 | 1"1/8 | 5000 | 2330 | 1900 | 2450 |

## MULTIHAVANE - Low noise

Low temperature range

| MULTIHAVANE OCT | Comp. | Capacity | Input power | Casing | Input current | Acoustic Lp at 10 m | Receiver capacity | Suction | Liquid | Dimensions | | | Net weight |
|---|---|---|---|---|---|---|---|---|---|---|---|---|---|
| | Nb | kW (1) | kW (1) | Type | A max. | dB(A) (2) | l. | Ø | Ø | L | P | H | kg |
| MHV OCT 2N/4EC4 ALN C1 L2-6 | 2 | 6,34 | 5,62 | C1 | 22,4 | 36 | 40 | 1"3/8 | 5/8" | 3475 | 920 | 1190 | 920 |
| MHV OCT 2N/4DC5 ALN C1 L2-6 | 2 | 7,52 | 6,76 | C1 | 28,0 | 37 | 40 | 1"3/8 | 5/8" | 3475 | 920 | 1190 | 920 |
| MHV OCT 2N/4CC6 ALN C1 L2-6 | 2 | 8,86 | 8,22 | C1 | 32,8 | 38 | 40 | 1"5/8 | 5/8" | 3475 | 920 | 1190 | 930 |
| MHV OCT 2N/4TCS8 ALN C1 L3-6 | 2 | 11,52 | 9,80 | C1 | 35,5 | 41 | 50 | 1"5/8 | 5/8" | 4375 | 920 | 1190 | 1150 |
| MHV OCT 2N/4PCS10 ALN C1 L3-6 | 2 | 12,91 | 11,07 | C1 | 43,5 | 42 | 50 | 1"5/8 | 5/8" | 4375 | 920 | 1190 | 1160 |
| MHV OCT 2N/4NCS12 ALN C2 L2-A | 2 | 15,43 | 12,81 | C2 | 49,3 | 42 | 68 | 2"1/8 | 7/8" | 4100 | 1230 | 1420 | 1380 |
| MHV OCT 3N/4EC4 ALN C3 L2-A | 3 | 9,29 | 8,15 | C3 | 32,6 | 33 | 40 | 1"5/8 | 5/8" | 4400 | 1250 | 1900 | 1530 |
| MHV OCT 3N/4DC5 ALN C3 L2-A | 3 | 11,57 | 10,05 | C3 | 41,8 | 36 | 50 | 1"5/8 | 5/8" | 4400 | 1250 | 1900 | 1600 |
| MHV OCT 3N/4CC6 ALN C3 L2-A | 3 | 13,72 | 12,23 | C3 | 49,0 | 38 | 50 | 1"5/8 | 5/8" | 4400 | 1250 | 1900 | 1620 |
| MHV OCT 3N/4TCS8 ALN C3 L2-A | 3 | 16,89 | 14,38 | C3 | 52,3 | 40 | 68 | 2"1/8 | 7/8" | 4400 | 1250 | 1900 | 1870 |
| MHV OCT 3N/4PCS10 ALN C3 L2-A | 3 | 19,81 | 17,52 | C3 | 67,9 | 45 | 68 | 2"1/8 | 7/8" | 4400 | 1250 | 1900 | 1890 |
| MHV OCT 3N/4NCS12 ALN C3 L2-A | 3 | 22,32 | 20,16 | C3 | 76,9 | 46 | 68 | 2"1/8 | 7/8" | 4400 | 1250 | 1900 | 1890 |
| MHV OCT 4N/4EC4 ALN C5 P4-A | 4 | 13,18 | 11,01 | C5 | 43,8 | 35 | 50 | 1"5/8 | 5/8" | 5000 | 2330 | 1900 | 2560 |
| MHV OCT 4N/4DC5 ALN C5 P4-A | 4 | 15,76 | 13,27 | C5 | 55,0 | 36 | 68 | 2"1/8 | 7/8" | 5000 | 2330 | 1900 | 2510 |
| MHV OCT 4N/4CC6 ALN C5 P4-A | 4 | 18,78 | 16,14 | C5 | 64,6 | 38 | 68 | 2"1/8 | 7/8" | 5000 | 2330 | 1900 | 2530 |
| MHV OCT 4N/4TCS8 ALN C5 P4-A | 4 | 23,53 | 19,36 | C5 | 69,9 | 42 | 68 | 2"1/8 | 7/8" | 5000 | 2330 | 1900 | 2710 |
| MHV OCT 4N/4PCS10 ALN C5 P4-A | 4 | 26,46 | 21,92 | C5 | 85,9 | 43 | 68 | 2"5/8 | 1"1/8 | 5000 | 2330 | 1900 | 2740 |
| MHV OCT 4N/4NCS12 ALN C5 P4-A | 4 | 30,03 | 25,57 | C5 | 98,6 | 45 | 68 | 2"5/8 | 1"1/8 | 5000 | 2330 | 1900 | 2740 |

*(1)* **A** *: Evaporation temperature* **-35°C** */ Ambient temperature* **+32°C** *- Superheating: 10K - Subcooling: 3K.*
**AS** *: Evaporation temperature* **-35°C** */ Ambient temperature* **+42°C** *- Superheating: 10K - Subcooling: 3K.*
**ALN** *: Evaporation temperature* **-35°C** */ Ambient temperature* **+32°C** *- Superheating: 10K - Subcooling: 3K.*
*(1) Sound pressure in dB(A) measured at 10 m, line of sight in a reflective surface, in accordance with standard EN 13487 (parallelepiped reference surface).*

## MULTIHAVANE - Standard

Low temperature range

| MULTIHAVANE SC | Comp. | Capacity | Input power | Casing | Input current | Receiver capacity | Suction | Liquid | Dimensions | | | Net weight |
|---|---|---|---|---|---|---|---|---|---|---|---|---|
| | Nb | kW (1) | kW (1) | Type | A max. | l. | Ø | Ø | L | P | H | kg |
| MHV SC 2N/ZF15 A C1 L2-5 | 2 | 6,25 | 6,42 | C1 | 21,4 | 40 | 1"3/8 | 5/8" | 2995 | 920 | 1190 | 700 |
| MHV SC 2N/ZF24 A C1 L2-5 | 2 | 9,18 | 9,78 | C1 | 33,6 | 40 | 1"5/8 | 5/8" | 2995 | 920 | 1190 | 830 |
| MHV SC 2N/ZF33 A C1 L2-6 | 2 | 12,79 | 12,53 | C1 | 46,8 | 50 | 2"1/8 | 5/8" | 3475 | 920 | 1190 | 950 |
| MHV SC 2N/ZF40 A C1 L2-6 | 2 | 15,78 | 17,61 | C1 | 54,8 | 68 | 2"1/8 | 7/8" | 3475 | 920 | 1190 | 910 |
| MHV SC 2N/ZF48 A C1 L2-6 | 2 | 18,32 | 22,84 | C1 | 65,8 | 68 | 2"1/8 | 7/8" | 3475 | 920 | 1190 | 920 |
| MHV SC 3N/ZF15 A C3 L2-A | 3 | 9,38 | 8,49 | C3 | 30,5 | 50 | 1"5/8 | 5/8" | 4400 | 1250 | 1900 | 1310 |
| MHV SC 3N/ZF24 A C3 L2-A | 3 | 13,88 | 13,98 | C3 | 49,6 | 50 | 2"1/8 | 5/8" | 4400 | 1250 | 1900 | 1490 |
| MHV SC 3N/ZF33 A C3 L2-A | 3 | 19,62 | 20,31 | C3 | 75,5 | 68 | 2"1/8 | 7/8" | 4400 | 1250 | 1900 | 1550 |
| MHV SC 3N/ZF40 A C3 L2-A | 3 | 23,63 | 25,44 | C3 | 83,9 | 68 | 2"5/8 | 7/8" | 4400 | 1250 | 1900 | 1580 |
| MHV SC 3N/ZF48 A C3 L2-A | 3 | 28,58 | 32,44 | C3 | 100,4 | 68 | 2"5/8 | 7/8" | 4400 | 1250 | 1900 | 1670 |
| MHV SC 4N/ZF24 A C5 P4-A | 4 | 19,25 | 18,17 | C5 | 66,3 | 68 | 2"1/8 | 7/8" | 5000 | 2330 | 1900 | 2260 |
| MHV SC 4N/ZF33 A C5 P4-A | 4 | 25,73 | 23,84 | C5 | 91,1 | 68 | 2"5/8 | 7/8" | 5000 | 2330 | 1900 | 2270 |
| MHV SC 4N/ZF40 A C5 P4-A | 4 | 30,99 | 30,91 | C5 | 103,0 | 68 | 2"5/8 | 1"1/8 | 5000 | 2330 | 1900 | 2310 |
| MHV SC 4N/ZF48 A C5 P4-A | 4 | 38,12 | 41,91 | C5 | 132,2 | 98 | 2"5/8 | 1"1/8 | 5000 | 2330 | 1900 | 2380 |

## MULTIHAVANE - Oversized condenser

Low temperature range

| | | | | | | | | | | | | |
|---|---|---|---|---|---|---|---|---|---|---|---|---|
| MHV SC 2N/ZF15 AS C1 L2-5 | 2 | 5,11 | 7,59 | C1 | 21,4 | 40 | 1"3/8 | 5/8" | 2995 | 920 | 1190 | 700 |
| MHV SC 2N/ZF24 AS C1 L2-5 | 2 | 7,39 | 11,22 | C1 | 33,6 | 40 | 1"5/8 | 5/8" | 2995 | 920 | 1190 | 830 |
| MHV SC 2N/ZF33 AS C1 L2-6 | 2 | 10,35 | 14,48 | C1 | 46,8 | 50 | 2"1/8 | 5/8" | 3475 | 920 | 1190 | 950 |
| MHV SC 2N/ZF40 AS C1 L2-6 | 2 | 12,77 | 20,25 | C1 | 54,8 | 68 | 2"1/8 | 7/8" | 3475 | 920 | 1190 | 910 |
| MHV SC 2N/ZF48 AS C1 L3-6 | 2 | 15,58 | 24,03 | C1 | 64,5 | 68 | 2"1/8 | 7/8" | 4375 | 920 | 1190 | 980 |
| MHV SC 3N/ZF15 AS C3 L2-A | 3 | 7,66 | 10,27 | C3 | 30,5 | 50 | 1"5/8 | 5/8" | 4400 | 1250 | 1900 | 1310 |
| MHV SC 3N/ZF24 AS C3 L2-A | 3 | 11,23 | 16,13 | C3 | 49,6 | 50 | 2"1/8 | 5/8" | 4400 | 1250 | 1900 | 1490 |
| MHV SC 3N/ZF33 AS C3 L2-A | 3 | 15,95 | 23,20 | C3 | 75,5 | 68 | 2"1/8 | 7/8" | 4400 | 1250 | 1900 | 1550 |
| MHV SC 3N/ZF40 AS C3 L2-A | 3 | 19,16 | 29,37 | C3 | 83,9 | 68 | 2"5/8 | 7/8" | 4400 | 1250 | 1900 | 1580 |
| MHV SC 3N/ZF48 AS C3 L2-A | 3 | 23,21 | 37,58 | C3 | 100,4 | 68 | 2"5/8 | 7/8" | 4400 | 1250 | 1900 | 1670 |
| MHV SC 4N/ZF24 AS C5 P4-A | 4 | 15,81 | 21,03 | C5 | 66,3 | 68 | 2"1/8 | 7/8" | 5000 | 2330 | 1900 | 2260 |
| MHV SC 4N/ZF33 AS C5 P4-A | 4 | 20,97 | 27,72 | C5 | 91,8 | 68 | 2"5/8 | 7/8" | 5000 | 2330 | 1900 | 2270 |
| MHV SC 4N/ZF40 AS C5 P4-A | 4 | 25,47 | 36,26 | C5 | 105,0 | 68 | 2"5/8 | 1"1/8 | 5000 | 2330 | 1900 | 2310 |
| MHV SC 4N/ZF48 AS C5 P4-A | 4 | 30,96 | 48,77 | C5 | 132,2 | 98 | 2"5/8 | 1"1/8 | 5000 | 2330 | 1900 | 2380 |

## MULTIHAVANE - Low noise

Low temperature range

| MULTIHAVANE SC | Comp. | Capacity | Input power | Casing | Input current | Acoustic Lp at 10 m | Receiver capacity | Suction | Liquid | Dimensions | | | Net weight |
|---|---|---|---|---|---|---|---|---|---|---|---|---|---|
| | Nb | kW (1) | kW (1) | Type | A max. | dB(A) (2) | l. | Ø | Ø | L | P | H | kg |
| MHV SC 2N/ZF15 ALN C1 L2-6 | 2 | 6,35 | 5,76 | C1 | 21,0 | 38 | 40 | 1"3/8 | 5/8" | 3475 | 920 | 1190 | 820 |
| MHV SC 2N/ZF24 ALN C1 L2-6 | 2 | 9,05 | 9,55 | C1 | 33,2 | 43 | 40 | 1"5/8 | 5/8" | 3475 | 920 | 1190 | 940 |
| MHV SC 2N/ZF33 ALN C1 L3-6 | 2 | 12,65 | 12,21 | C1 | 46,1 | 43 | 50 | 2"1/8 | 5/8" | 4375 | 920 | 1190 | 1100 |
| MHV SC 2N/ZF40 ALN C2 L2-A | 2 | 15,81 | 15,18 | C2 | 51,5 | 42 | 68 | 2"1/8 | 7/8" | 4100 | 1230 | 1420 | 1310 |
| MHV SC 2N/ZF48 ALN C2 L2-A | 2 | 19,06 | 20,96 | C2 | 66,1 | 46 | 68 | 2"1/8 | 7/8" | 4100 | 1230 | 1420 | 1320 |
| MHV SC 3N/ZF15 ALN C3 L2-A | 3 | 9,38 | 8,49 | C3 | 30,5 | 37 | 50 | 1"5/8 | 5/8" | 4400 | 1250 | 1900 | 1450 |
| MHV SC 3N/ZF24 ALN C3 L2-A | 3 | 13,88 | 13,98 | C3 | 49,6 | 44 | 50 | 2"1/8 | 5/8" | 4400 | 1250 | 1900 | 1630 |
| MHV SC 3N/ZF33 ALN C3 L2-A | 3 | 19,28 | 18,97 | C3 | 71,8 | 46 | 68 | 2"1/8 | 7/8" | 4400 | 1250 | 1900 | 1750 |
| MHV SC 3N/ZF40 ALN C3 L2-A | 3 | 23,83 | 23,76 | C3 | 80,2 | 46 | 68 | 2"5/8 | 7/8" | 4400 | 1250 | 1900 | 1780 |
| MHV SC 3N/ZF48 ALN C3 L3-A | 3 | 28,61 | 31,41 | C3 | 99,2 | 47 | 68 | 2"5/8 | 7/8" | 5600 | 1250 | 1900 | 2020 |
| MHV SC 4N/ZF24 ALN C5 P4-A | 4 | 19,25 | 18,17 | C5 | 66,3 | 45 | 68 | 2"1/8 | 7/8" | 5000 | 2330 | 1900 | 2550 |
| MHV SC 4N/ZF33 ALN C5 P4-A | 4 | 25,73 | 23,84 | C5 | 91,1 | 45 | 68 | 2"5/8 | 7/8" | 5000 | 2330 | 1900 | 2560 |
| MHV SC 4N/ZF40 ALN C5 P4-A | 4 | 30,99 | 30,91 | C5 | 103,0 | 45 | 68 | 2"5/8 | 1"1/8 | 5000 | 2330 | 1900 | 2600 |
| MHV SC 4N/ZF48 ALN C5 P4-A | 4 | 38,12 | 41,91 | C5 | 132,2 | 49 | 98 | 2"5/8 | 1"1/8 | 5000 | 2330 | 1900 | 2730 |

*(1)* **A** *: Evaporation temperature* **-35°C** */ Ambient temperature* **+32°C** *- Superheating: 10K - Subcooling: 3K.*
**AS** *: Evaporation temperature* **-35°C** */ Ambient temperature* **+42°C** *- Superheating: 10K - Subcooling: 3K.*
**ALN** *: Evaporation temperature* **-35°C** */ Ambient temperature* **+32°C** *- Superheating: 10K - Subcooling: 3K.*
*(1) Sound pressure in dB(A) measured at 10 m, line of sight in a reflective surface, in accordance with standard EN 13487 (parallelepiped reference surface).*

## MULTIHAVANE - Standard

Low temperature range

| MULTIHAVANE SH | Comp. | Capacity | Input power | Casing | Input current | Receiver capacity | Suction | Liquid | Dimensions | | | Net weight |
|---|---|---|---|---|---|---|---|---|---|---|---|---|
| | Nb | kW (1) | kW (1) | Type | A max. | l. | Ø | Ø | L | P | H | kg |
| MHV SH 2N/4H15 A C3 L2-A | 2 | 22,31 | 21,25 | C3 | 70,6 | 68 | 2"5/8 | 7/8" | 4400 | 1250 | 1900 | 1640 |
| MHV SH 2N/D4DL150 A C3 L2-A | 2 | 23,61 | 21,28 | C3 | 65,6 | 68 | 2"5/8 | 7/8" | 4400 | 1250 | 1900 | 1670 |
| MHV SH 2N/4G20 A C3 L2-A | 2 | 26,02 | 24,22 | C3 | 82,6 | 68 | 2"5/8 | 1"1/8 | 4400 | 1250 | 1900 | 1730 |
| MHV SH 2N/D4DT220 A C3 L2-A | 2 | 29,59 | 25,72 | C3 | 74,6 | 68 | 2"5/8 | 1"1/8 | 4400 | 1250 | 1900 | 1760 |
| MHV SH 2N/6H25 A C4 P4-A | 2 | 33,54 | 29,79 | C4 | 99,8 | 98 | 2"5/8 | 1"3/8 | 4400 | 2330 | 1900 | 2270 |
| MHV SH 2N/D6DL270 A C4 P4-A | 2 | 34,93 | 30,13 | C4 | 95,8 | 98 | 2"5/8 | 1"3/8 | 4400 | 2330 | 1900 | 2260 |
| MHV SH 2N/6G30 A C4 P4-A | 2 | 37,10 | 33,23 | C4 | 115,8 | 98 | 3"1/8 | 1"3/8 | 4400 | 2330 | 1900 | 2280 |
| MHV SH 2N/D6DT320 A C4 P4-A | 2 | 42,27 | 35,92 | C4 | 116,0 | 98 | 3"1/8 | 1"3/8 | 4400 | 2330 | 1900 | 2330 |
| MHV SH 2N/6F40 A C4 P4-A | 2 | 42,40 | 38,65 | C4 | 165,8 | 145 | 3"1/8 | 1"3/8 | 4400 | 2330 | 1900 | 2330 |
| MHV SH 2N/D6SU400 A C4 P4-A | 2 | 46,13 | 40,59 | C4 | 165,8 | 145 | 3"1/8 | 1"3/8 | 4400 | 2330 | 1900 | 2410 |
| MHV SH 3N/4H15 A C5 P4-A | 3 | 34,23 | 30,23 | C5 | 102,8 | 98 | 2"5/8 | 1"3/8 | 5000 | 2330 | 1900 | 2490 |
| MHV SH 3N/D4DL150 A C5 P4-A | 3 | 36,18 | 30,24 | C5 | 95,3 | 98 | 2"5/8 | 1"3/8 | 5000 | 2330 | 1900 | 2530 |
| MHV SH 3N/4G20 A C5 P4-A | 3 | 38,31 | 34,50 | C5 | 120,8 | 145 | 3"1/8 | 1"3/8 | 5000 | 2330 | 1900 | 2580 |
| MHV SH 3N/D4DT220 A C5 P4-A | 3 | 43,60 | 36,78 | C5 | 108,8 | 145 | 3"1/8 | 1"3/8 | 5000 | 2330 | 1900 | 2630 |
| MHV SH 3N/6H25 A C5 P4-A | 3 | 46,94 | 43,36 | C5 | 144,8 | 145 | 4"1/8 | 1"5/8 | 5000 | 2330 | 1900 | 2710 |
| MHV SH 3N/D6DL270 A C5 P4-A | 3 | 49,07 | 43,98 | C5 | 138,8 | 145 | 4"1/8 | 1"5/8 | 5000 | 2330 | 1900 | 2740 |
| MHV SH 3N/6G30 A C5 P4-A | 3 | 55,64 | 51,85 | C5 | 176,2 | 145 | 4"1/8 | 1"5/8 | 5000 | 2330 | 1900 | 2840 |
| MHV SH 3N/D6DT320 A C5 P4-A | 3 | 63,39 | 55,88 | C5 | 176,5 | 145 | 4"1/8 | 1"5/8 | 5000 | 2330 | 1900 | 2920 |
| MHV SH 3N/6F40 A C5 P4-A | 3 | 63,58 | 59,98 | C5 | 251,2 | 200 | 4"1/8 | 1"5/8 | 5000 | 2330 | 1900 | 2890 |
| MHV SH 3N/D6SU400 A C5 P4-A | 3 | 69,16 | 62,89 | C5 | 251,2 | 200 | 4"1/8 | 1"5/8 | 5000 | 2330 | 1900 | 3020 |

## MULTIHAVANE - Oversized condenser

Low temperature range

| | | | | | | | | | | | | |
|---|---|---|---|---|---|---|---|---|---|---|---|---|
| MHV SH 2N/4H15 AS C3 L2-A | 2 | 16,64 | 21,51 | C3 | 70,6 | 68 | 2"5/8 | 7/8" | 4400 | 1250 | 1900 | 1640 |
| MHV SH 2N/D4DL150 AS C3 L2-A | 2 | 17,99 | 21,56 | C3 | 65,6 | 68 | 2"5/8 | 7/8" | 4400 | 1250 | 1900 | 1670 |
| MHV SH 2N/4G20 AS C3 L2-A | 2 | 19,81 | 24,62 | C3 | 82,6 | 68 | 2"5/8 | 1"1/8 | 4400 | 1250 | 1900 | 1730 |
| MHV SH 2N/D4DT220 AS C3 L2-A | 2 | 22,81 | 26,14 | C3 | 74,6 | 68 | 2"5/8 | 1"1/8 | 4400 | 1250 | 1900 | 1760 |
| MHV SH 2N/6H25 AS C4 P4-A | 2 | 25,53 | 30,31 | C4 | 99,8 | 98 | 2"5/8 | 1"3/8 | 4400 | 2330 | 1900 | 2270 |
| MHV SH 2N/D6DL270 AS C4 P4-A | 2 | 27,03 | 30,77 | C4 | 95,8 | 98 | 2"5/8 | 1"3/8 | 4400 | 2330 | 1900 | 2260 |
| MHV SH 2N/6G30 AS C4 P4-A | 2 | 28,32 | 33,86 | C4 | 115,8 | 98 | 3"1/8 | 1"3/8 | 4400 | 2330 | 1900 | 2280 |
| MHV SH 2N/D6DT320 AS C4 P4-A | 2 | 32,63 | 37,18 | C4 | 116,0 | 98 | 3"1/8 | 1"3/8 | 4400 | 2330 | 1900 | 2330 |
| MHV SH 2N/6F40 AS C4 P4-A | 2 | 31,38 | 38,75 | C4 | 165,8 | 145 | 3"1/8 | 1"3/8 | 4400 | 2330 | 1900 | 2330 |
| MHV SH 2N/D6SU400 AS C4 P4-A | 2 | 35,41 | 40,92 | C4 | 165,8 | 145 | 3"1/8 | 1"3/8 | 4400 | 2330 | 1900 | 2410 |
| MHV SH 3N/4H15 AS C5 P4-A | 3 | 25,56 | 30,64 | C5 | 102,8 | 98 | 2"5/8 | 1"3/8 | 5000 | 2330 | 1900 | 2490 |
| MHV SH 3N/D4DL150 AS C5 P4-A | 3 | 27,57 | 30,74 | C5 | 95,3 | 98 | 2"5/8 | 1"3/8 | 5000 | 2330 | 1900 | 2530 |
| MHV SH 3N/4G20 AS C5 P4-A | 3 | 29,11 | 35,05 | C5 | 120,8 | 145 | 3"1/8 | 1"3/8 | 5000 | 2330 | 1900 | 2580 |
| MHV SH 3N/D4DT220 AS C5 P4-A | 3 | 33,53 | 37,30 | C5 | 108,8 | 145 | 3"1/8 | 1"3/8 | 5000 | 2330 | 1900 | 2630 |
| MHV SH 3N/6H25 AS C5 P4-A | 3 | 35,57 | 43,96 | C5 | 144,8 | 145 | 4"1/8 | 1"5/8 | 5000 | 2330 | 1900 | 2710 |
| MHV SH 3N/D6DL270 AS C5 P4-A | 3 | 37,71 | 44,60 | C5 | 138,8 | 145 | 4"1/8 | 1"5/8 | 5000 | 2330 | 1900 | 2740 |
| MHV SH 3N/6G30 AS C5 P4-A | 3 | 42,47 | 52,79 | C5 | 176,2 | 145 | 4"1/8 | 1"5/8 | 5000 | 2330 | 1900 | 2840 |
| MHV SH 3N/D6DT320 AS C5 P4-A | 3 | 48,94 | 57,77 | C5 | 176,5 | 145 | 4"1/8 | 1"5/8 | 5000 | 2330 | 1900 | 2920 |
| MHV SH 3N/6F40 AS C5 P4-A | 3 | 47,07 | 60,12 | C5 | 251,2 | 200 | 4"1/8 | 1"5/8 | 5000 | 2330 | 1900 | 2890 |
| MHV SH 3N/D6SU400 AS C5 P4-A | 3 | 53,01 | 63,38 | C5 | 251,2 | 200 | 4"1/8 | 1"5/8 | 5000 | 2330 | 1900 | 3020 |

## MULTIHAVANE - Low noise

Low temperature range

| MULTIHAVANE SH | Comp. | Capacity | Input power | Casing | Input current | Acoustic Lp at 10 m | Receiver capacity | Suction | Liquid | Dimensions | | | Net weight |
|---|---|---|---|---|---|---|---|---|---|---|---|---|---|
| | Nb | kW (1) | kW (1) | Type | A max. | dB(A) (2) | l. | Ø | Ø | L | P | H | kg |
| MHV SH 2N/4H15 ALN C3 L2-A | 2 | 21,70 | 19,69 | C3 | 66,9 | 45 | 68 | 2"5/8 | 7/8" | 4400 | 1250 | 1900 | 1840 |
| MHV SH 2N/D4DL150 ALN C3 L2-A | 2 | 23,00 | 19,74 | C3 | 61,9 | 48 | 68 | 2"5/8 | 7/8" | 4400 | 1250 | 1900 | 1870 |
| MHV SH 2N/4G20 ALN C3 L2-A | 2 | 25,26 | 22,59 | C3 | 78,9 | 47 | 68 | 2"5/8 | 1"1/8 | 4400 | 1250 | 1900 | 1870 |
| MHV SH 2N/D4DT220 ALN C3 L2-A | 2 | 28,73 | 24,12 | C3 | 70,9 | 49 | 68 | 2"5/8 | 1"1/8 | 4400 | 1250 | 1900 | 1900 |
| MHV SH 2N/6H25 ALN C4 P4-A | 2 | 31,56 | 27,55 | C4 | 92,6 | 50 | 98 | 2"5/8 | 1"3/8 | 4400 | 2330 | 1900 | 2510 |
| MHV SH 2N/D6DL270 ALN C4 P4-A | 2 | 32,97 | 27,96 | C4 | 88,6 | 50 | 98 | 2"5/8 | 1"3/8 | 4400 | 2330 | 1900 | 2500 |
| MHV SH 2N/6G30 ALN C4 P4-A | 2 | 37,10 | 33,23 | C4 | 115,8 | 51 | 98 | 3"1/8 | 1"3/8 | 4400 | 2330 | 1900 | 2580 |
| MHV SH 2N/D6DT320 ALN C4 P4-A | 2 | 42,27 | 35,92 | C4 | 116,0 | 52 | 98 | 3"1/8 | 1"3/8 | 4400 | 2330 | 1900 | 2630 |
| MHV SH 2N/6F40 ALN C4 P4-A | 2 | 42,40 | 38,65 | C4 | 165,8 | 52 | 145 | 3"1/8 | 1"3/8 | 4400 | 2330 | 1900 | 2630 |
| MHV SH 2N/D6SU400 ALN C4 P4-A | 2 | 46,13 | 40,59 | C4 | 165,8 | 49 | 145 | 3"1/8 | 1"3/8 | 4400 | 2330 | 1900 | 2710 |
| MHV SH 3N/4H15 ALN C5 P4-A | 3 | 32,06 | 27,97 | C5 | 95,6 | 42 | 98 | 2"5/8 | 1"3/8 | 5000 | 2330 | 1900 | 2780 |
| MHV SH 3N/D4DL150 ALN C5 P4-A | 3 | 34,01 | 28,05 | C5 | 88,1 | 49 | 98 | 2"5/8 | 1"3/8 | 5000 | 2330 | 1900 | 2820 |
| MHV SH 3N/4G20 ALN C5 P4-A | 3 | 38,31 | 34,50 | C5 | 120,8 | 50 | 145 | 3"1/8 | 1"3/8 | 5000 | 2330 | 1900 | 2940 |
| MHV SH 3N/D4DT220 ALN C5 P4-A | 3 | 43,60 | 36,78 | C5 | 108,8 | 51 | 145 | 3"1/8 | 1"3/8 | 5000 | 2330 | 1900 | 2980 |
| MHV SH 3N/6H25 ALN C5 P4-A | 3 | 47,23 | 42,34 | C5 | 139,8 | 52 | 145 | 4"1/8 | 1"5/8 | 5000 | 2330 | 1900 | 3110 |
| MHV SH 3N/D6DL270 ALN C5 P4-A | 3 | 49,35 | 42,95 | C5 | 133,8 | 52 | 145 | 4"1/8 | 1"5/8 | 5000 | 2330 | 1900 | 3140 |
| MHV SH 3N/6G30 ALN C5 P6-A | 3 | 55,70 | 49,84 | C5 | 173,7 | 53 | 145 | 4"1/8 | 1"5/8 | 6200 | 2330 | 1900 | 3440 |
| MHV SH 3N/D6DT320 ALN C5 P6-A | 3 | 63,46 | 53,87 | C5 | 174,0 | 54 | 145 | 4"1/8 | 1"5/8 | 6200 | 2330 | 1900 | 3520 |
| MHV SH 3N/6F40 ALN C5 P6-A | 3 | 63,66 | 57,98 | C5 | 248,7 | 54 | 200 | 4"1/8 | 1"5/8 | 6200 | 2330 | 1900 | 3490 |
| MHV SH 3N/D6SU400 ALN C5 P6-A | 3 | 69,26 | 60,88 | C5 | 248,7 | 51 | 200 | 4"1/8 | 1"5/8 | 6200 | 2330 | 1900 | 3610 |

*(1)* **A** *: Evaporation temperature* **-35°C** */ Ambient temperature* **+32°C** *- Superheating: 10K - Subcooling: 3K.*
**AS** *: Evaporation temperature* **-35°C** */ Ambient temperature* **+42°C** *- Superheating: 10K - Subcooling: 3K.*
**ALN** *: Evaporation temperature* **-35°C** */ Ambient temperature* **+32°C** *- Superheating: 10K - Subcooling: 3K.*
*(1) Sound pressure in dB(A) measured at 10 m, line of sight in a reflective surface, in accordance with standard EN 13487 (parallelepiped reference surface).*

HEATCRAFT™
Worldwide Refrigeration

E Solutions
Efficiency • Environment

# Compressor rack

## eCO2Gen range

### Installation with cascade in medium temperature circuit

- **Sub-critical $CO_2$ racks** available in version direct expansion and glycol water.
- **"Turnkey" range** with equipment grouped and connected on a common frame.
- **Environmentally-friendly, natural refrigerant ($CO_2$)** for the production of cold in supermarkets.
- **Service pack:** Training in the use of $CO_2$ equipment.
- **Software selection:** $CO_2$ rack + chill rack with or without options.

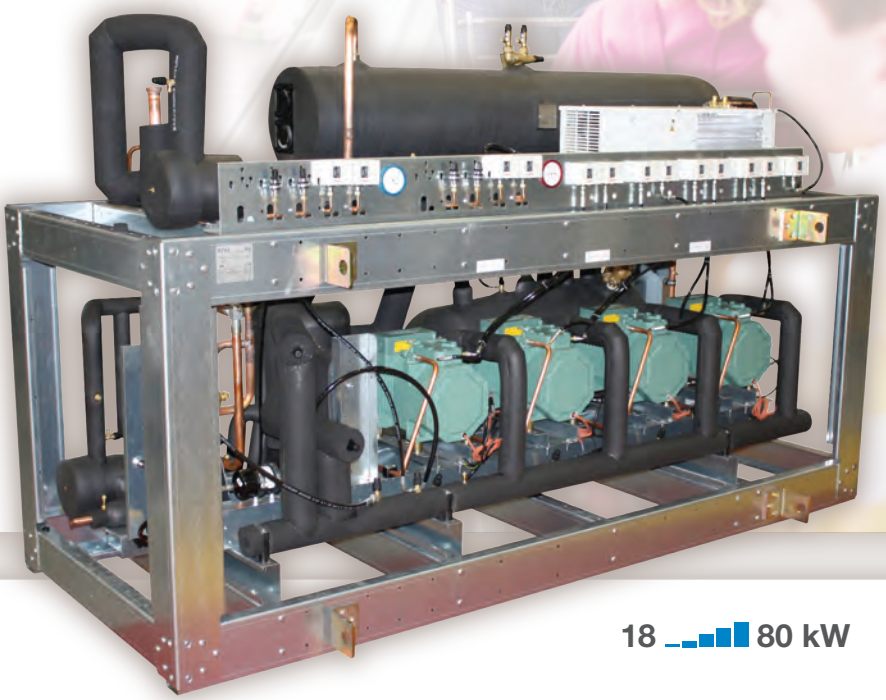

*Natural fluids:*
*$CO_2$ (R744) – Glycol water*
*Environment*

18 ▁▂▃▄▅ 80 kW

FRIGA-BOHN

HYFRA® PEDIA

HK® REFRIGERATION

Heatcraft reserves itself the right to make changes at any time without preliminary notice - Photos non-contractual

## Market segments

*FSM Hard Discount - Supermarkets - Hypermarkets*
*FCS Refrigerated storage and transit stocking - Dispatch centres – Food processing*

**Wide range up to 200 kW, for the glycol water model only (please contact us)**

## Description

### Frame
- Thick, folded, galvanized sheet steel monobock unit.

### Compressors
- Compressors using semi-hermetic piston technology equipped with:
  - Casing heater.
  - Suction and delivery shut-off valves.
  - HP and LP tapping points with Schrader connector.

### Collectors
- A general filter unit with tapping point and by-pass valves and 2 maintenance valves (1/4" SAE).
- Copper suction and delivery collector.
- Liquid suction accumulator with oil return via siphon and discharge valve.

### Insulation
- Thermal insulation of the entire refrigeration circuit with the exception of delivery and oil lines.

### Oil line
- Removable oil separator by-pass valve and discharge valve.
- Oil receiver with high and low indicator, shut-off valve and discharge valve.
- Oil return with filter and indicator.
- Electronic level controller with shut-off valve per compressor.
- Non-adjustable, receiver degassing differential valve connected to the LP collector.
- Copper oil collector with flexible connection for each compressor.

### Liquid station
- Horizontal liquid receiver with shutoff valves.
- Double safety shut-off valve with inverter switch.
- Removable cartridge dryer with by-pass valves and 2 maintenance valves (1/4" SAE).
- Optoelectronic level alarm fitted to the liquid column in parallel with the receiver and height adjustable.
- Liquid/steam exchanger with by-pass valves in suction side and liquid side.

### Connection pack
- 1 connection valve on the suction and liquid supply line.

### Monitoring devices
- **Per compressor:**
- LP pressure switch connected to the compressor.
- 1 or 2 automatic reset HP cartridge pressure switch(s) per compressor (according to standard EN 378-2: 2009).
- INT safety thermistor box.
- **Per rack:**
- General LP safety pressure switch.
- General HP safety pressure switch.
- Framing HP and LP pressure switch.
- Set of HP and LP manometers, diameter 80 mm, class 1.
- LP and HP sensors for normal operation control.
- LP and HP sensors for back-up operation control.

### Condenser
- Multi-tube heat-exchanger with discharge valve(s).
- **Direct expansion model:**

Siemens "polycool" electronic expansion valve with probe and sensor for control of superheating during normal operation.
Thermostatic expansion valve coupled with a solenoid valve in parallel with an electronic expansion valve in back-up operation.

- **Glycol water model:**

Supply of a glycol water flow controller and thermostat kit.

### Safety unit
- Condensing unit filled with R404A with refrigerated connected to the $CO_2$ liquid receiver via a plate unit cooler.

## Designation

**eCO2Gen 24(1) /4(2) DB(3)**

(1) Direct expansion capacity
(2) Number of compressor
(3) **DB** = direct expansion - **EB** = Glycol water

## Certifications

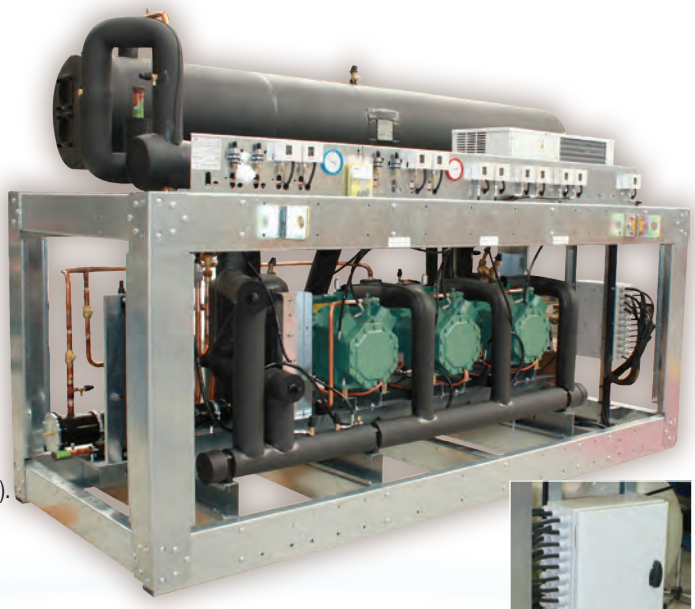

**eCO2Gen**
*$CO_2$ low temperature racks (R744) with CCB option*

## Options

| Kit | Factory | |
|---|---|---|
| | ALR | Electronic level alarm on the oil receiver. |
| | CCB | Control terminal rail wiring. |
| | PC1 | Rack pre-wired with 5 m cable available. |
| PAV | | Anti-vibration pads. |

# eCO2Gen - CO2 Semi-Hermetic Piston rack

## eCO2Gen - Direct expansion — Low-temperature range

| -35°C / -5°C* | eCO2Gen ... | | 18/3 DB | 24/4 DB | 25/3 DB | 32/3 DB | 33/4 DB | 40/3 DB | 42/4 DB | 53/4 DB | 60/3 DB | 80/4 DB |
|---|---|---|---|---|---|---|---|---|---|---|---|---|
| Capacity CO2* | | kW | 16,5 | 22,1 | 25,1 | 32,3 | 33,5 | 40,2 | 43,1 | 53,5 | 60,3 | 83,0 |
| Input power* | | kW | 4,5 | 6,1 | 6,7 | 8,5 | 8,9 | 10,2 | 11,4 | 13,6 | 15,6 | 20,9 |
| Compressor | | Nb | 3 | 4 | 3 | 3 | 4 | 3 | 4 | 4 | 3 | 4 |
| Max. input current | | A | 18 | 24 | 18 | 21 | 24 | 35 | 28 | 46 | 41 | 54 |
| Receiver capacity | | l. | 70 | 70 | 70 | 70 | 70 | 180 | 180 | 180 | 180 | 180 |
| Connection pack | Suction | Ø | 2"1/8 | 2"1/8 | 2"1/8 | 2"5/8 | 2"5/8 | 2"5/8 | 2"5/8 | 3"1/8 | 3"1/8 | 114,3 |
| | Liquid | Ø | 7/8" | 7/8" | 7/8" | 7/8" | 7/8" | 1"1/8 | 1"1/8 | 1"1/8 | 1"1/8 | 1"3/8 |
| Rack weight | | kg | 1070 | 1140 | 1080 | 1110 | 1160 | 1120 | 1220 | 1350 | 1470 | 1600 |
| Receiver dimensions | L | mm | 3000 | 3000 | 3000 | 3000 | 3000 | 3000 | 3000 | 3000 | 3000 | 3000 |
| | P | mm | 1440 | 1440 | 1440 | 1440 | 1440 | 1440 | 1440 | 1440 | 1440 | 1440 |
| | H | mm | 1990 | 1990 | 1990 | 1990 | 1990 | 1990 | 1990 | 1990 | 1990 | 1990 |

** Evaporation temperature/condensation temperature – Superheating total 20K, useful 10K and subcooling 3K .*
**Refer to the software package for a more accurate rack selection.**

## eCO2Gen - Glycol water — Low-temperature range

| -35°C / -3°C* | eCO2Gen ... | | 24/4 EB | 25/3 EB | 32/3 EB | 33/4 EB | 40/3 EB | 42/4 EB | 53/4 EB | 60/3 EB | 80/4 EB |
|---|---|---|---|---|---|---|---|---|---|---|---|
| Capacity CO2* | | kW | 21,2 | 24,2 | 31,1 | 32,2 | 38,8 | 41,5 | 51,7 | 60,2 | 80,2 |
| Input power* | | kW | 6,3 | 7,0 | 9,0 | 9,4 | 10,7 | 12,0 | 14,3 | 16,4 | 21,9 |
| Compressor | | Nb | 4 | 3 | 3 | 4 | 3 | 4 | 4 | 3 | 4 |
| Max. input current | | A | 24 | 18 | 21 | 24 | 35 | 28 | 46 | 41 | 54 |
| Receiver capacity | | l. | 70 | 70 | 70 | 70 | 180 | 180 | 180 | 180 | 180 |
| Connection | | DN | 65 | 65 | 65 | 65 | 80 | 80 | 80 | 100 | 100 |
| Rack weight | | kg | 1140 | 1080 | 1110 | 1160 | 1120 | 1220 | 1350 | 1470 | 1600 |
| Receiver dimensions | L | mm | 3000 | 3000 | 3000 | 3000 | 3000 | 3000 | 3000 | 3000 | 3000 |
| | P | mm | 1440 | 1440 | 1440 | 1440 | 1440 | 1440 | 1440 | 1440 | 1440 |
| | H | mm | 1990 | 1990 | 1990 | 1990 | 1990 | 1990 | 1990 | 1990 | 1990 |

** Evaporation temperature/condensation temperature – Superheating total 20K, useful 10K and subcooling 3K .*
*** Glycol water: Fluid: Percentage of glycol = 40% - range -8/-4°C*
**Refer to the software package for a more accurate rack selection.**

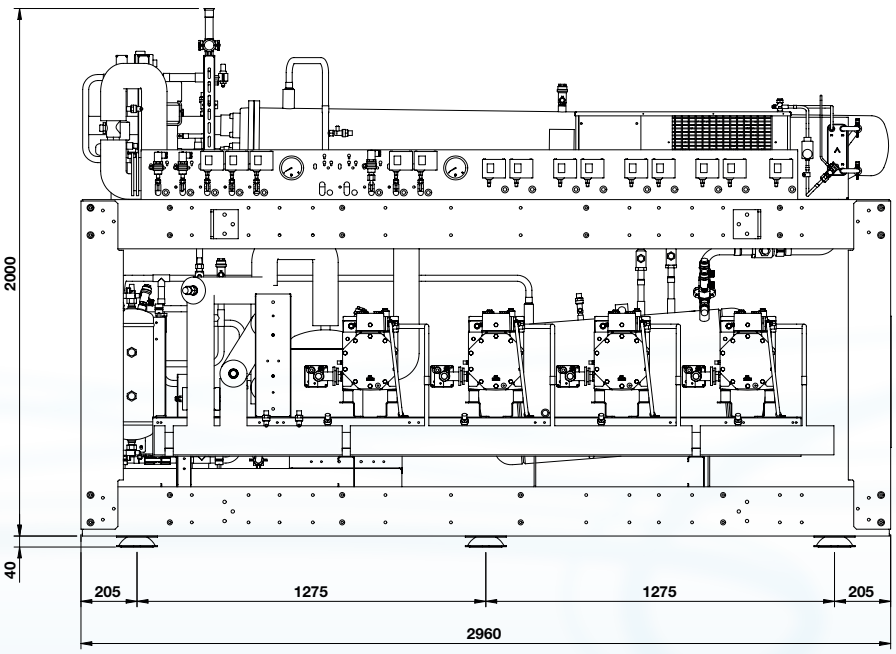


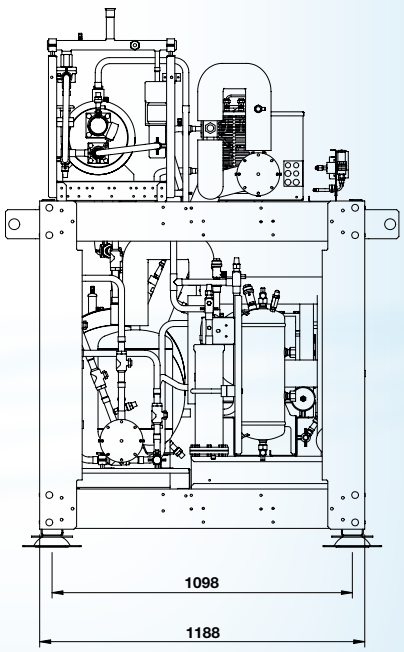


| ALR | CCB | PC1 | PAV |
|---|---|---|---|
| O | O | O | O |

In 2012, our condensing unit and rack ranges will be upgraded according to the characteristics of the new semi-hermetic compressors with optimized energy efficiency and compatible with R404A as well as R134a:

**STREAM range**
for compressors with 4 to 6 cylinders

**ECOLINE range**
for compressors with 2 to 6 cylinders

HEATCRAFT™
Worldwide Refrigeration

# Compressor rack

## COMPACT range

### Semi-Hermetic pistons and Scroll

- A range specially designed to meet the needs and expectations of today's market, in particular with regard to reliability and compactness.
- Racks include 2 to 4 Scroll or Octagon Semi-Hermetic compressors.
- Folded, galvanized steel monoblock frame eliminating vibrations. Liquid station on a separate frame.
- Copper collector and oil control line.
- Supplied non-wired, wired or with a complete switching enclosure.

6 110 kW

Heatcraft reserves itself the right to make changes at any time without preliminary notice - Photos non-contractual

FRIGA-BOHN

HYFRA® PEDIA

HK® REFRIGERATION

## Market segments

*FSM Hard Discount - Supermarkets - Hypermarkets*
*FCS Food processing – Canteen kitchens*

## Designation

# COM 2(1)P(2) / 4EC4(3)

(1) Number of compressor
(2) **P** = Chill range – **N** = Low temperature range
(3) Type of compressor

## Certifications

## Description

### Frame
- Monoblock frame designed to avoid vibration-related problems.

### Compressors
- Compressor with scroll (Copeland) or semi-hermetic piston (Octagon) technology.
- Equipped with a shut-off valve on the suction and delivery sides, casing heater and rigid suspension elements.
- Head fan for semi-hermetic piston models used in low-temperature applications.

### Collectors
- Copper suction and delivery pipes.
- Polypropylene fastening straps on the suction side and high-temperature resistant polyamide straps on the delivery side.
- A general filter unit on the suction side.

### Oil line
- Oil separator with receiver high and low level indicator.
- Oil collector with flexible end connections.
- LP oil return line with filter and indicator.
- Oil level regulator with float system with shut-off valve per compressor for SH and electronical for Scroll.
- Degassing valve.

### Liquid station
- On separate frame.
- 2 inlet/outlet shut-off valves.
- Liquid line equipped with a removable filter dryer unit and indicator.
- Single safety valve (double from 115L).

### Connection pack
- 1 connection valve on the suction, delivery and liquid line.

### Monitoring devices
- 1 general safety LP pressure switch.
- 1 or 2 automatic reset HP cartridge pressure switch(s) per compressor (according to EN 378-2: 2009).
- 2 manometers (LP+HP)
- 1 oil differential pressure switch per compressor for semi-hermetic piston compressor model 4TC to 4NC.

## Options

| Kit | Factory | |
|---|---|---|
| | | **Safety pack** |
| | BPS | LP safety pressure switch per compressor. |
| | HPG | General HP safety pressure switch. |
| | | **Regulator pack** |
| | BP1 | LP pressure switch (automatic reset). |
| | HPS | Additional HP pressure switches. |
| | CDP | LP/HP pressure sensors, 4-20 mA signal. |
| | | **Miscellaneous** |
| | BAC | Suction accumulator (only for semi-hermetic compressor). |
| | TXL | Traxoil oil regulator. |
| | RLS | Oversized liquid receiver. |
| | ALF | Height-adjustable refrigerant level alarm with float. |
| | ALR | Opto-electronic refrigerant level alarm. |
| | SSD | Double safety valve with 3-way valve (for receivers < 115 litres). |
| | BDR | Condensate drip tray under suction collectors. |
| PAV | | Anti-vibration pads. |
| | ARM | Switching enclosure (contact us). |

## COMPACT - Octagon
### Without BAC option

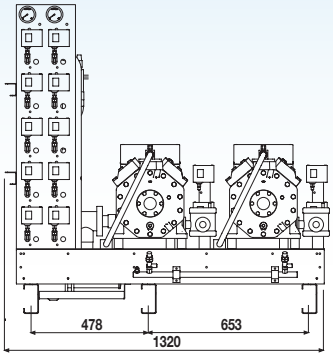


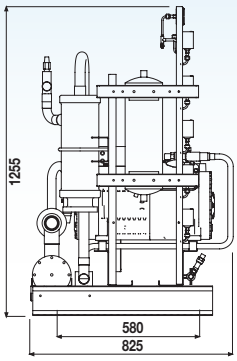


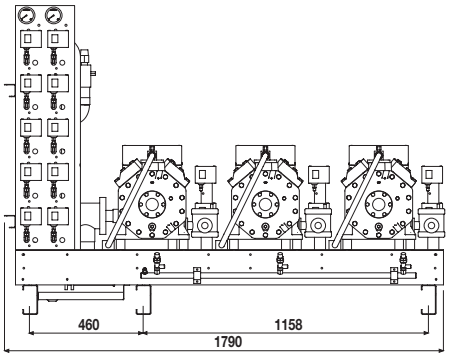


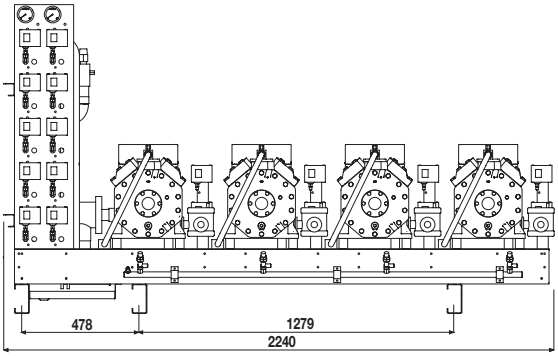


## COMPACT - Octagon
### With BAC option

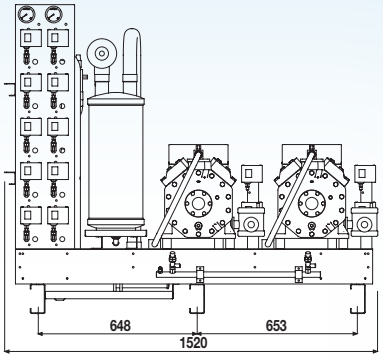


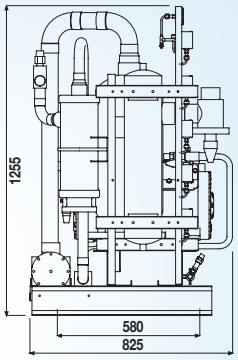


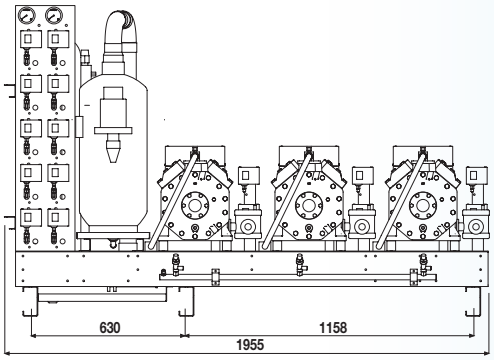


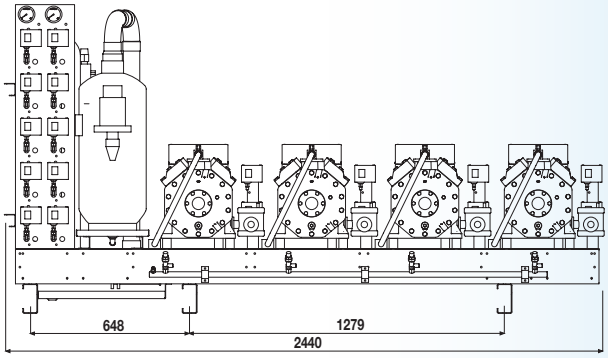


## COMPACT - Scroll

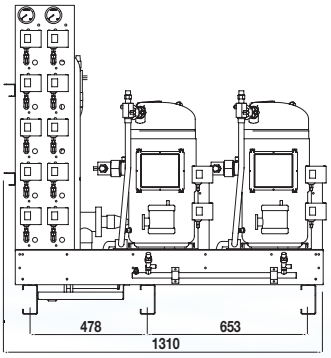


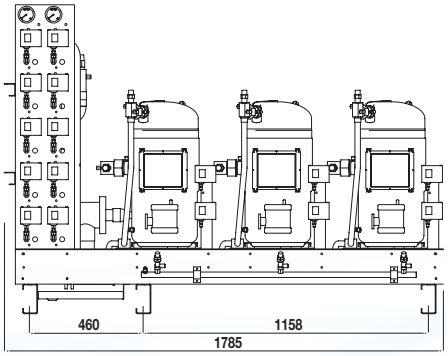


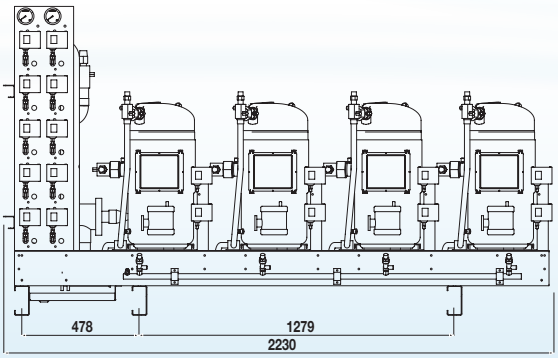


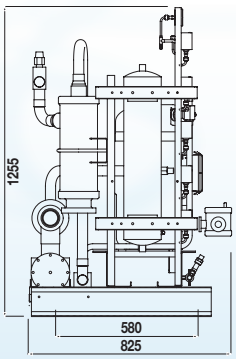


## Liquid station

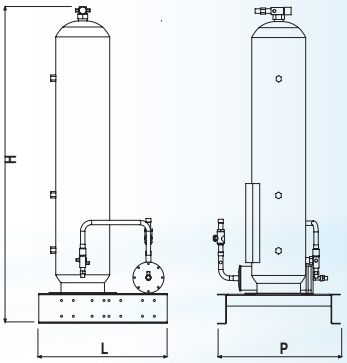

## COMPACT - Octagon

Chill range

| -10°C/+45°C * | | COM ... | 2P 4EC4 | 2P 4DC5 | 2P 4CC6 | 3P 4EC4 | 3P 4DC5 | 2P 4TCS8 | 4P 4EC4 | 3P 4CC6 | 2P 4PCS10 |
|---|---|---|---|---|---|---|---|---|---|---|---|
| Capacity R404A* | | kW | **20,5** | **25,1** | **30,3** | **30,8** | **37,7** | **39,4** | **41,0** | **45,5** | **46,0** |
| Input power* | | kW | **10,3** | **12,5** | **15,2** | **15,5** | **18,8** | **18,8** | **20,7** | **22,7** | **21,8** |
| Compressor | | Nb | 2 | 2 | 2 | 3 | 3 | 2 | 4 | 3 | 2 |
| Max. input current | | A | 21,4 | 27,0 | 31,8 | 32,1 | 40,5 | 34,0 | 42,8 | 47,7 | 42,0 |
| Receiver volume | | l. | 50 | 50 | 70 | 70 | 70 | 70 | 70 | 70 | 70 |
| Standard connection package | Discharge | Ø | 1"1/8 | 1"1/8 | 1"1/8 | 1"1/8 | 1"1/8 | 1"1/8 | 1"1/8 | 1"1/8 | 1"1/8 |
| | Suction | Ø | 1"5/8 | 1"5/8 | 1"5/8 | 1"5/8 | 2"1/8 | 2"1/8 | 2"1/8 | 2"1/8 | 2"1/8 |
| | Liquid | Ø | 7/8" | 7/8" | 7/8" | 7/8" | 1"1/8 | 1"1/8 | 1"1/8 | 1"1/8 | 1"1/8 |
| Rack weight | | kg | 380 | 410 | 400 | 480 | 490 | 490 | 590 | 510 | 500 |
| Receiver dimensions | L | mm | 650 | 650 | 650 | 650 | 650 | 650 | 650 | 650 | 650 |
| | P | mm | 620 | 620 | 620 | 620 | 620 | 620 | 620 | 620 | 620 |
| | H | mm | 1350 | 1350 | 1700 | 1700 | 1700 | 1700 | 1700 | 1700 | 1700 |
| Receiver weight | | kg | 110 | 110 | 140 | 140 | 140 | 140 | 140 | 140 | 140 |

| -10°C/+45°C * | | COM ... | 4P 4DC5 | 2P 4NCS12 | 3P 4TCS8 | 4P 4CC6 | 3P 4PCS10 | 4P 4TCS8 | 3P 4NCS12 | 4P 4PCS10 | 4P 4NCS12 |
|---|---|---|---|---|---|---|---|---|---|---|---|
| Capacity R404A* | | kW | **50,3** | **53,2** | **59,1** | **60,7** | **68,9** | **78,8** | **79,8** | **91,9** | **106,4** |
| Input power* | | kW | **25,0** | **25,7** | **28,2** | **30,3** | **32,7** | **37,6** | **38,5** | **43,5** | **51,3** |
| Compressor | | Nb | 4 | 2 | 3 | 4 | 3 | 4 | 3 | 4 | 4 |
| Max. input current | | A | 54,0 | 48,0 | 51,0 | 63,6 | 63,0 | 68,0 | 72,0 | 84,0 | 96,0 |
| Receiver volume | | l. | 70 | 70 | 70 | 70 | 115 | 115 | 115 | 115 | 115 |
| Standard connection package | Discharge | Ø | 1"3/8 | 1"3/8 | 1"3/8 | 1"3/8 | 1"3/8 | 1"5/8 | 1"5/8 | 1"5/8 | 1"5/8 |
| | Suction | Ø | 2"1/8 | 2"1/8 | 2"1/8 | 2"1/8 | 2"5/8 | 2"5/8 | 2"5/8 | 2"5/8 | 2"5/8 |
| | Liquid | Ø | 1"1/8 | 1"1/8 | 1"1/8 | 1"1/8 | 1"3/8 | 1"3/8 | 1"3/8 | 1"3/8 | 1"3/8 |
| Rack weight | | kg | 600 | 510 | 640 | 620 | 660 | 800 | 670 | 820 | 830 |
| Receiver dimensions | L | mm | 650 | 650 | 650 | 650 | 650 | 650 | 650 | 650 | 650 |
| | P | mm | 620 | 620 | 620 | 620 | 620 | 620 | 620 | 620 | 620 |
| | H | mm | 1700 | 1700 | 1700 | 1700 | 1950 | 1950 | 1950 | 1950 | 1950 |
| Receiver weight | | kg | 140 | 140 | 140 | 140 | 190 | 190 | 190 | 190 | 190 |

** Evaporation temperature / condensation temperature - Superheating 10K, subcooling 3K.*
**Refer to the software package for a more accurate rack selection.**

| | BPS | HPG | BP1 | HPS | CDP | BAC | TXL | RLS 70 l. | RLS 115 l. | RLS 160 l. | ALF | ALR | SSD | BDR | PAV | ARM |
|---|---|---|---|---|---|---|---|---|---|---|---|---|---|---|---|---|
| **COM 2P/4EC4** | O | O | O | O | O | O | O | O | - | - | O | O | O | O | O | O |
| **COM 2P/4DC5** | O | O | O | O | O | O | O | O | - | - | O | O | O | O | O | O |
| **COM 2P/4CC6** | O | O | O | O | O | O | O | - | O | - | O | O | O | O | O | O |
| **COM 3P/4EC4** | O | O | O | O | O | O | O | - | O | - | O | O | O | O | O | O |
| **COM 3P/4DC5** | O | O | O | O | O | O | O | - | O | - | O | O | O | O | O | O |
| **COM 2P/4TCS8** | O | O | O | O | O | O | O | - | O | - | O | O | O | O | O | O |
| **COM 4P/4EC4** | O | O | O | O | O | O | O | - | O | - | O | O | O | O | O | O |
| **COM 3P/4CC6** | O | O | O | O | O | O | O | - | O | - | O | O | O | O | O | O |
| **COM 2P/4PCS10** | O | O | O | O | O | O | O | - | O | - | O | O | O | O | O | O |
| **COM 4P/4DC5** | O | O | O | O | O | O | O | - | O | - | O | O | O | O | O | O |
| **COM 2P/4NCS12** | O | O | O | O | O | O | O | - | O | - | O | O | O | O | O | O |
| **COM 3P/4TCS8** | O | O | O | O | O | O | O | - | O | - | O | O | O | O | O | O |
| **COM 4P/4CC6** | O | O | O | O | O | O | O | - | O | - | O | O | O | O | O | O |
| **COM 3P/4PCS10** | O | O | O | O | O | O | O | - | - | O | O | O | - | O | O | O |
| **COM 4P/4TCS8** | O | O | O | O | O | O | O | - | - | O | O | O | - | O | O | O |
| **COM 3P/4NCS12** | O | O | O | O | O | O | O | - | - | O | O | O | - | O | O | O |
| **COM 4P/4PCS10** | O | O | O | O | O | O | O | - | - | O | O | O | - | O | O | O |
| **COM 4P/4NCS12** | O | O | O | O | O | O | O | - | - | O | O | O | - | O | O | O |

## COMPACT - Octagon

**Low temperature range**

| -35°C/+40°C * | | COM ... | 2N 4EC4 | 2N 4DC5 | 3N 4EC4 | 2N 4CC6 | 3N 4DC5 | 2N 4TCS8 | 4N 4EC4 | 2N 4PCS10 | 3N 4CC6 |
|---|---|---|---|---|---|---|---|---|---|---|---|
| Capacity R404A* | | kW | 5,9 | 7,3 | 8,9 | 9,0 | 11,0 | 11,2 | 11,9 | 12,9 | 13,5 |
| Input power* | | kW | 5,3 | 6,4 | 7,9 | 7,9 | 9,7 | 9,3 | 10,6 | 10,6 | 11,8 |
| Compressor | | Nb | 2 | 2 | 3 | 2 | 3 | 2 | 4 | 2 | 3 |
| Max. input current | | A | 21,4 | 27,0 | 32,1 | 31,8 | 40,5 | 34,0 | 42,8 | 42,0 | 47,7 |
| Receiver volume | | l. | 50 | 50 | 50 | 50 | 50 | 50 | 50 | 50 | 50 |
| Standard connection package | Discharge | Ø | 1"1/8 | 1"1/8 | 1"1/8 | 1"1/8 | 1"1/8 | 1"1/8 | 1"1/8 | 1"1/8 | 1"1/8 |
| | Suction | Ø | 1"3/8 | 1"3/8 | 1"5/8 | 1"5/8 | 1"5/8 | 1"5/8 | 1"5/8 | 1"5/8 | 1"5/8 |
| | Liquid | Ø | 5/8" | 5/8" | 5/8" | 5/8" | 5/8" | 5/8" | 5/8" | 5/8" | 5/8" |
| Rack weight | | kg | 400 | 400 | 510 | 410 | 510 | 500 | 610 | 510 | 540 |
| Receiver dimensions | L | mm | 650 | 650 | 650 | 650 | 650 | 650 | 650 | 650 | 650 |
| | P | mm | 620 | 620 | 620 | 620 | 620 | 620 | 620 | 620 | 620 |
| | H | mm | 1350 | 1350 | 1350 | 1350 | 1350 | 1350 | 1350 | 1350 | 1350 |
| Receiver weight | | kg | 110 | 110 | 110 | 110 | 110 | 110 | 110 | 110 | 110 |

| -35°C/+40°C * | | COM ... | 4N 4DC5 | 2N 4NCS12 | 3N 4TCS8 | 4N 4CC6 | 3N 4PCS10 | 4N 4TCS8 | 3N 4NCS12 | 4N 4PCS10 | 4N 4NCS12 |
|---|---|---|---|---|---|---|---|---|---|---|---|
| Capacity R404A* | | kW | 14,6 | 15,0 | 16,8 | 18,0 | 19,4 | 22,4 | 22,6 | 25,9 | 30,1 |
| Input power* | | kW | 12,9 | 12,4 | 14,0 | 15,8 | 15,9 | 18,6 | 18,6 | 21,2 | 24,8 |
| Compressor | | Nb | 4 | 2 | 3 | 4 | 3 | 4 | 3 | 4 | 4 |
| Max. input current | | A | 54,0 | 48,0 | 51,0 | 63,6 | 63,0 | 68,0 | 72,0 | 84,0 | 96,0 |
| Receiver volume | | l. | 70 | 70 | 70 | 70 | 70 | 70 | 70 | 70 | 70 |
| Standard connection package | Discharge | Ø | 1"1/8 | 1"1/8 | 1"1/8 | 1"1/8 | 1"1/8 | 1"1/8 | 1"1/8 | 1"1/8 | 1"1/8 |
| | Suction | Ø | 2"1/8 | 2"1/8 | 2"1/8 | 2"1/8 | 2"1/8 | 2"1/8 | 2"1/8 | 2"5/8 | 2"5/8 |
| | Liquid | Ø | 7/8" | 7/8" | 7/8" | 7/8" | 7/8" | 7/8" | 7/8" | 1"1/8 | 1"1/8 |
| Rack weight | | kg | 620 | 520 | 660 | 640 | 630 | 820 | 680 | 840 | 850 |
| Receiver dimensions | L | mm | 650 | 650 | 650 | 650 | 650 | 650 | 650 | 650 | 650 |
| | P | mm | 620 | 620 | 620 | 620 | 620 | 620 | 620 | 620 | 620 |
| | H | mm | 1700 | 1700 | 1700 | 1700 | 1700 | 1700 | 1700 | 1700 | 1700 |
| Receiver weight | | kg | 140 | 140 | 140 | 140 | 140 | 140 | 140 | 140 | 140 |

** Evaporation temperature / condensation temperature - Superheating 10K, subcooling 3K.*
**Refer to the software package for a more accurate rack selection.**

| | BPS | HPG | BP1 | HPS | CDP | BAC | TXL | RLS 70 l. | RLS 115 l. | RLS 160 l. | ALF | ALR | SSD | BDR | PAV | ARM |
|---|---|---|---|---|---|---|---|---|---|---|---|---|---|---|---|---|
| **COM 2N/4EC4** | O | O | O | O | O | O | O | O | - | - | O | O | O | O | O | O |
| **COM 2N/4DC5** | O | O | O | O | O | O | O | O | - | - | O | O | O | O | O | O |
| **COM 3N/4EC4** | O | O | O | O | O | O | O | O | - | - | O | O | O | O | O | O |
| **COM 2N/4CC6** | O | O | O | O | O | O | O | O | - | - | O | O | O | O | O | O |
| **COM 3N/4DC5** | O | O | O | O | O | O | O | O | - | - | O | O | O | O | O | O |
| **COM 2N/4TCS8** | O | O | O | O | O | O | O | O | - | - | O | O | O | O | O | O |
| **COM 4N/4EC4** | O | O | O | O | O | O | O | O | - | - | O | O | O | O | O | O |
| **COM 2N/4PCS10** | O | O | O | O | O | O | O | O | - | - | O | O | O | O | O | O |
| **COM 3N/4CC6** | O | O | O | O | O | O | O | O | - | - | O | O | O | O | O | O |
| **COM 4N/4DC5** | O | O | O | O | O | O | O | - | O | - | O | O | O | O | O | O |
| **COM 2N/4NCS12** | O | O | O | O | O | O | O | - | O | - | O | O | O | O | O | O |
| **COM 3N/4TCS8** | O | O | O | O | O | O | O | - | O | - | O | O | O | O | O | O |
| **COM 4N/4CC6** | O | O | O | O | O | O | O | - | O | - | O | O | O | O | O | O |
| **COM 3N/4PCS10** | O | O | O | O | O | O | O | - | O | - | O | O | O | O | O | O |
| **COM 4N/4TCS8** | O | O | O | O | O | O | O | - | O | - | O | O | O | O | O | O |
| **COM 3N/4NCS12** | O | O | O | O | O | O | O | - | O | - | O | O | O | O | O | O |
| **COM 4N/4PCS10** | O | O | O | O | O | O | O | - | O | - | O | O | O | O | O | O |
| **COM 4N/4NCS12** | O | O | O | O | O | O | O | - | O | - | O | O | O | O | O | O |

## COMPACT - Scroll

Chill range

| -10°C/+45°C * | | COM ... | 2P ZB38 | 2P ZB45 | 2P ZB50 | 3P ZB38 | 2P ZB66 | 3P ZB45 | 3P ZB50 | 2P ZB76 | 2P ZB95 | 3P ZB66 |
|---|---|---|---|---|---|---|---|---|---|---|---|---|
| Capacity R404A* | | kW | **16,6** | **19,6** | **23,2** | **24,9** | **29,4** | **29,4** | **34,7** | **34,8** | **42,3** | **44,1** |
| Input power* | | kW | **8,4** | **9,6** | **11,4** | **12,6** | **14,2** | **14,4** | **17,2** | **16,3** | **21,0** | **21,2** |
| Compressor | | Nb | 2 | 2 | 2 | 3 | 2 | 3 | 2 | 3 | 2 | 3 |
| Max. input current | | A | 25,6 | 24,0 | 29,2 | 38,4 | 35,0 | 36,0 | 43,8 | 40,8 | 56,4 | 52,5 |
| Receiver volume | | l. | 50 | 50 | 50 | 50 | 50 | 50 | 70 | 70 | 70 | 70 |
| Standard connection package | Discharge | Ø | 1"1/8 | 1"1/8 | 1"1/8 | 1"1/8 | 1"1/8 | 1"1/8 | 1"1/8 | 1"1/8 | 1"1/8 | 1"1/8 |
| | Suction | Ø | 1"5/8 | 1"5/8 | 1"5/8 | 1"5/8 | 1"5/8 | 1"5/8 | 2"1/8 | 2"1/8 | 2"1/8 | 2"1/8 |
| | Liquid | Ø | 7/8" | 7/8" | 7/8" | 7/8" | 7/8" | 7/8" | 1"1/8 | 7/8" | 1"1/8 | 1"1/8 |
| Rack weight | | kg | 300 | 310 | 340 | 360 | 340 | 360 | 420 | 350 | 350 | 420 |
| Receiver dimensions | L | mm | 650 | 650 | 650 | 650 | 650 | 650 | 650 | 650 | 650 | 650 |
| | P | mm | 620 | 620 | 620 | 620 | 620 | 620 | 620 | 620 | 620 | 620 |
| | H | mm | 1350 | 1350 | 1350 | 1350 | 1350 | 1350 | 1700 | 1700 | 1700 | 1700 |
| Receiver weight | | kg | 110 | 110 | 110 | 110 | 110 | 110 | 140 | 140 | 140 | 140 |

| -10°C/+45°C * | | COM ... | 4P ZB50 | 3P ZB76 | 2P ZB114 | 4P ZB66 | 3P ZB95 | 4P ZB76 | 3P ZB114 | 4P ZB95 | 4P ZB114 |
|---|---|---|---|---|---|---|---|---|---|---|---|
| Capacity R404A* | | kW | **46,3** | **52,2** | **50,2** | **58,8** | **63,5** | **69,6** | **75,3** | **84,7** | **100,4** |
| Input power* | | kW | **22,9** | **24,4** | **25,2** | **28,3** | **31,5** | **32,6** | **37,8** | **42,0** | **50,4** |
| Compressor | | Nb | 4 | 3 | 2 | 4 | 3 | 4 | 3 | 4 | 4 |
| Max. input current | | A | 58,4 | 61,2 | 66,6 | 70,0 | 84,6 | 81,6 | 99,9 | 112,8 | 133,2 |
| Receiver volume | | l. | 70 | 70 | 70 | 70 | 70 | 70 | 115 | 115 | 115 |
| Standard connection package | Discharge | Ø | 1"1/8 | 1"3/8 | 1"3/8 | 1"3/8 | 1"3/8 | 1"3/8 | 1"3/8 | 1"5/8 | 1"5/8 |
| | Suction | Ø | 2"1/8 | 2"1/8 | 2"1/8 | 2"1/8 | 2"5/8 | 2"5/8 | 2"5/8 | 2"5/8 | 2"5/8 |
| | Liquid | Ø | 1"1/8 | 1"1/8 | 1"1/8 | 1"1/8 | 1"1/8 | 1"1/8 | 1"3/8 | 1"3/8 | 1"3/8 |
| Rack weight | | kg | 510 | 450 | 360 | 510 | 450 | 540 | 450 | 540 | 550 |
| Receiver dimensions | L | mm | 650 | 650 | 650 | 650 | 650 | 650 | 650 | 650 | 650 |
| | P | mm | 620 | 620 | 620 | 620 | 620 | 620 | 620 | 620 | 620 |
| | H | mm | 1700 | 1700 | 1700 | 1700 | 1700 | 1700 | 1950 | 1950 | 1950 |
| Receiver weight | | kg | 140 | 140 | 140 | 140 | 140 | 140 | 190 | 190 | 190 |

** Evaporation temperature / condensation temperature - Superheating 10K, subcooling 3K.*
**Refer to the software package for a more accurate rack selection.**

| | BPS | HPG | BP1 | HPS | CDP | BAC | TXL | RLS 70 l. | RLS 115 l. | RLS 160 l. | ALF | ALR | SSD | BDR | PAV | ARM |
|---|---|---|---|---|---|---|---|---|---|---|---|---|---|---|---|---|
| **COM 2P/ZB38** | O | O | O | O | O | - | O | O | - | - | O | O | O | O | O | O |
| **COM 2P/ZB45** | O | O | O | O | O | - | O | O | - | - | O | O | O | O | O | O |
| **COM 2P/ZB56** | O | O | O | O | O | - | O | O | - | - | O | O | O | O | O | O |
| **COM 3P/ZB38** | O | O | O | O | O | - | O | O | - | - | O | O | O | O | O | O |
| **COM 3P/ZB45** | O | O | O | O | O | - | O | O | - | - | O | O | O | O | O | O |
| **COM 2P/ZB75** | O | O | O | O | O | - | O | - | O | - | O | O | O | O | O | O |
| **COM 3P/ZB56** | O | O | O | O | O | - | O | - | O | - | O | O | O | O | O | O |
| **COM 2P/ZB92** | O | O | O | O | O | - | O | - | O | - | O | O | O | O | O | O |
| **COM 4P/ZB56** | O | O | O | O | O | - | O | - | O | - | O | O | O | O | O | O |
| **COM 3P/ZB75** | O | O | O | O | O | - | O | - | O | - | O | O | O | O | O | O |
| **COM 2P/ZB11** | O | O | O | O | O | - | O | - | O | - | O | O | O | O | O | O |
| **COM 3P/ZB92** | O | O | O | O | O | - | O | - | O | - | O | O | O | O | O | O |
| **COM 4P/ZB75** | O | O | O | O | O | - | O | - | O | - | O | O | O | O | O | O |
| **COM 3P/ZB11** | O | O | O | O | O | - | O | - | - | O | O | O | - | O | O | O |
| **COM 4P/ZB92** | O | O | O | O | O | - | O | - | - | O | O | O | - | O | O | O |
| **COM 4P/ZB11** | O | O | O | O | O | - | O | - | - | O | O | O | - | O | O | O |

## COMPACT - Scroll

Low temperature range

| -35°C/+40°C * | | COM ... | 2N ZF15 | 3N ZF15 | 2N ZF24 | 2N ZF33 | 3N ZF24 | 2N ZF40 | 3N ZF33 |
|---|---|---|---|---|---|---|---|---|---|
| Capacity R404A* | | kW | **6,1** | **9,2** | **9,3** | **12,7** | **13,9** | **15,8** | **19,1** |
| Input power* | | kW | **5,7** | **8,5** | **9,0** | **11,7** | **13,6** | **14,8** | **17,5** |
| Compressor | | Nb | 2 | 3 | 2 | 2 | 3 | 2 | 3 |
| Max. input current | | A | 20,0 | 30,0 | 32,2 | 44,6 | 48,3 | 50,2 | 66,9 |
| Receiver volume | | l. | 50 | 50 | 50 | 50 | 50 | 70 | 70 |
| Standard connection package | Discharge | Ø | 1"1/8 | 1"1/8 | 1"1/8 | 1"1/8 | 1"1/8 | 1"1/8 | 1"1/8 |
| | Suction | Ø | 1"3/8 | 1"5/8 | 1"5/8 | 2"1/8 | 2"1/8 | 2"1/8 | 2"1/8 |
| | Liquid | Ø | 5/8" | 5/8" | 5/8" | 5/8" | 5/8" | 7/8" | 7/8" |
| Rack weight | | kg | 300 | 360 | 430 | 440 | 530 | 450 | 540 |
| Receiver dimensions | L | mm | 650 | 650 | 650 | 650 | 650 | 650 | 650 |
| | P | mm | 620 | 620 | 620 | 620 | 620 | 620 | 620 |
| | H | mm | 1350 | 1350 | 1350 | 1350 | 1350 | 1700 | 1700 |
| Receiver weight | | kg | 110 | 110 | 110 | 110 | 110 | 140 | 140 |

| -35°C/+40°C * | | COM ... | 2N ZF48 | 4N ZF24 | 3N ZF40 | 4N ZF33 | 3N ZF48 | 4N ZF40 | 4N ZF48 |
|---|---|---|---|---|---|---|---|---|---|
| Capacity R404A* | | kW | **19,0** | **18,5** | **23,6** | **25,5** | **28,5** | **31,5** | **38,0** |
| Input power* | | kW | **19,4** | **18,1** | **22,2** | **23,3** | **29,1** | **29,6** | **38,8** |
| Compressor | | Nb | 2 | 4 | 3 | 4 | 3 | 4 | 4 |
| Max. input current | | A | 61,2 | 64,4 | 75,3 | 89,2 | 91,8 | 100,4 | 122,4 |
| Receiver volume | | l. | 70 | 70 | 70 | 70 | 70 | 70 | 115 |
| Standard connection package | Discharge | Ø | 1"1/8 | 1"1/8 | 1"1/8 | 1"1/8 | 1"1/8 | 1"1/8 | 1"3/8 |
| | Suction | Ø | 2"1/8 | 2"1/8 | 2"5/8 | 2"5/8 | 2"5/8 | 2"5/8 | 2"5/8 |
| | Liquid | Ø | 7/8" | 7/8" | 7/8" | 7/8" | 7/8" | 1"1/8 | 1"1/8 |
| Rack weight | | kg | 480 | 660 | 570 | 670 | 600 | 710 | 750 |
| Receiver dimensions | L | mm | 650 | 650 | 650 | 650 | 650 | 650 | 650 |
| | P | mm | 620 | 620 | 620 | 620 | 620 | 620 | 620 |
| | H | mm | 1700 | 1700 | 1700 | 1700 | 1700 | 1700 | 1950 |
| Receiver weight | | kg | 140 | 140 | 140 | 140 | 140 | 140 | 190 |

** Evaporation temperature / condensation temperature - Superheating 10K, subcooling 3K.*
**Refer to the software package for a more accurate rack selection.**

| | BPS | HPG | BP1 | HPS | CDP | BAC | TXL | RLS 70 l. | RLS 115 l. | RLS 160 l. | ALF | ALR | SSD | BDR | PAV | ARM |
|---|---|---|---|---|---|---|---|---|---|---|---|---|---|---|---|---|
| **COM 2N/ZF15** | O | O | O | O | O | - | S | O | - | - | O | O | O | O | O | O |
| **COM 3N/ZF15** | O | O | O | O | O | - | S | O | - | - | O | O | O | O | O | O |
| **COM 2N/ZF24** | O | O | O | O | O | - | S | O | - | - | O | O | O | O | O | O |
| **COM 2N/ZF33** | O | O | O | O | O | - | S | O | - | - | O | O | O | O | O | O |
| **COM 3N/ZF24** | O | O | O | O | O | - | S | O | - | - | O | O | O | O | O | O |
| **COM 2N/ZF40** | O | O | O | O | O | - | S | - | O | - | O | O | O | O | O | O |
| **COM 3N/ZF33** | O | O | O | O | O | - | S | - | O | - | O | O | O | O | O | O |
| **COM 2N/ZF48** | O | O | O | O | O | - | S | - | O | - | O | O | O | O | O | O |
| **COM 4N/ZF24** | O | O | O | O | O | - | S | - | O | - | O | O | O | O | O | O |
| **COM 3N/ZF40** | O | O | O | O | O | - | S | - | O | - | O | O | O | O | O | O |
| **COM 4N/ZF33** | O | O | O | O | O | - | S | - | O | - | O | O | O | O | O | O |
| **COM 3N/ZF48** | O | O | O | O | O | - | S | - | O | - | O | O | O | O | O | O |
| **COM 4N/ZF40** | O | O | O | O | O | - | S | - | O | - | O | O | O | O | O | O |
| **COM 4N/ZF48** | O | O | O | O | O | - | S | - | - | O | O | O | - | O | O | O |

In 2012, our condensing unit and rack ranges will be upgraded according to the characteristics of the new semi-hermetic compressors with optimized energy efficiency and compatible with R404A as well as R134a:

**STREAM range**
for compressors with 4 to 6 cylinders

**ECOLINE range**
for compressors with 2 to 6 cylinders

HEATCRAFT™
Worldwide Refrigeration

# Compressor rack

## MOPSH / MOSC range

### Semi-Hermetic pistons and Scroll

- Racks composed in standard:
  - MOPSH model with 2 to 5 semi-hermetic compressors,
  - MOSC model with 5 and 6 Scroll compressors.
- Supplied non-wired, wired or with a complete switching enclosure.
- Rack adapted for use in sites with difficult access.
- Low width 800 to 1,000 mm.
- Liquid station delivered on a separate frame.
- Painted, U-profile, monoblock frame to eliminate vibrations.

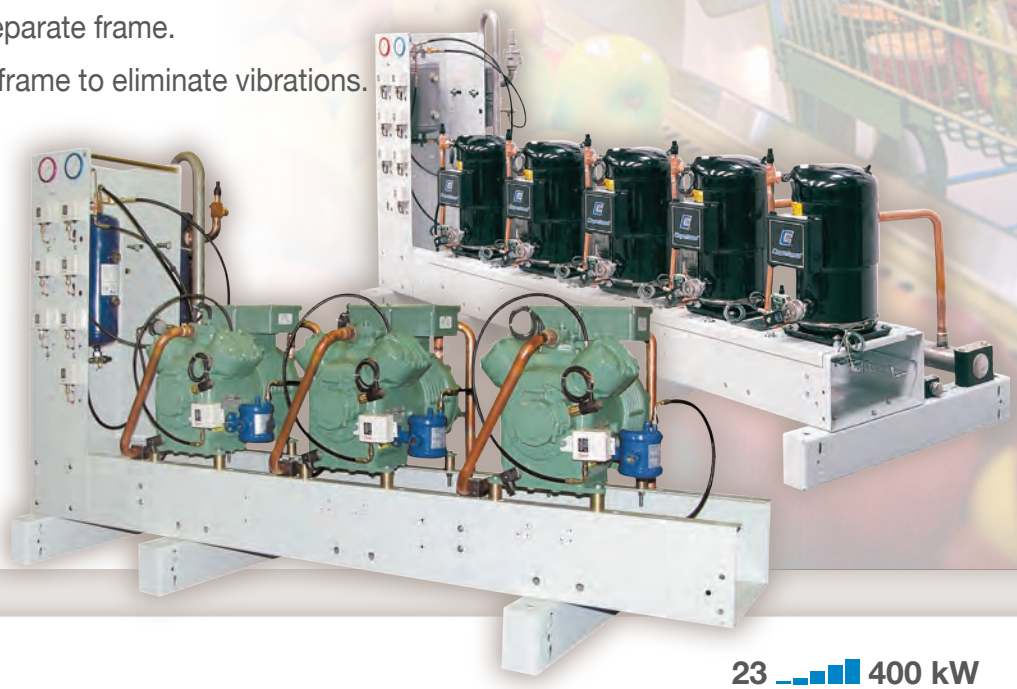

23 ▁▂▃▄▅ 400 kW

Heatcraft reserves itself the right to make changes at any time without preliminary notice - Photos non-contractual

FRIGA-BOHN

HYFRA® PEDIA

HK® REFRIGERATION

## Market segments

*FSM Hard Discount - Supermarkets - Hypermarkets*
*FCS Refrigerated storage and transit stocking - Dispatch centres - Food processing*

## Designation

# MOPSH 60(1) - 2(2)P(3)

(1) Model
(2) Number of compressor
(3) **P** = Chill range - **N** = Low temperature range

## Certifications

## Description

### Frame

**MOPSH - MOSC**

- Monoblock, painted, 4 mm thick, U-profile, folded sheet steel.

### Compressors

**MOPSH**

- With ROTALOCK suction and delivery valves + head fan for low temperature applications, casing heater and oil pump.

**MOSC**

- Equipped with ROTALOCK suctions and delivery valves, casing heater, HP safety cartridge pressure switch and rigid suspension.
- The low temperature models are also equipped with an injection system with various configurations according to the compressors used: shut-off valve, filter, solenoid valve and capillary.

### Collectors

**MOPSH - MOSC**

- Suction and delivery pipes made of stainless steel 304 L.
- Schrader pressure tapping point with a shut-off valve per collector (connection of mano-pressure switch, etc...).
- Polypropylene fastening straps on the suction side and high-temperature resistant polyamide straps on the delivery side.

**MOPSH**

- A general suction filter unit with removable cartridge up to 186 kW refrigeration capacity for chill and 47 kW for low temperature. One unit per compressor for higher capacities.

**MOSC**

- A removable cartridge filter fitted on the suction collector.

### Oil line

**MOPSH - MOSC**

- Removable oil separator and oil receiver with high/low level Indicator and shut-off valves.
- Oil collector with flexible end connections.
- LP oil return line with filter, indicator and shut-off valve per compressor.
- Degassing valve.

**MOPSH**

- Level regulator with float.

### Liquid station

- On separate frame.
- 2 inlet/outlet shut-off valves.
- Liquid line equipped with a removable filter dryer unit up to 146 kW for chill and 50 kW for low temperature (2 units in parallel for higher capacities with shut-off valves).
- General line indicator and shut-off valve.
- Single safety valve (double from 115 l.).

### Monitoring devices

**MOPSH - MOSC**

- 1 general safety LP pressure switch.
- 1 or 2 automatic reset HP cartridge pressure switch(s) per compressor (according to EN 378-2: 2009).
- 2 manometers (LP+HP).

**MOPSH**

- Oil differential pressure switch per compressor.

## Options

| Kit | Factory | |
|---|---|---|
| | | **Connection pack** |
| | **PR1** | External connection valves (1 delivery, 1 suction, 1 liquid). |
| | **PR2** | External connection valves (1 delivery, 2 suction, 2 liquid). |
| | **PR3** | External connection valves (1 delivery, 3 suction, 3 liquid). |
| | | **Safety pack** |
| | **BPS** | LP safety pressure switch per compressor. |
| | **HPG** | HP general pressure switch (automatic). |
| | | **Regulator pack** |
| | **BP1** | LP pressure switch (automatic) per compressor. |
| | **HPS** | Additional HP pressure switches. |
| | **CDP** | LP/HP pressure sensors, 4-20 mA signal. |
| | | **Miscellaneous** |
| | **TXL** | Traxoil oil regulator (**MOPSH**). |
| | **BD1** | Single liquid dryer by-pass (1 filter) during operation. |
| | **ALF** | Height-adjustable refrigerant level alarm with float. |
| | **ALR** | Opto-electronic refrigerant level alarm. |
| | **PAV** | Anti-vibration pads (supplied with the rack not fitted). |
| | **SSD** | Double safety valve with 3-way valve (for receivers < 115 litres). |
| | **RLS** | Oversized liquid receiver. |
| | **BDR** | Condensate drip tray under suction collectors. |
| | **VFA** | Suction valve and filter on each compressor (**MOPSH**). |
| | **CAR** | Casing (with incorporated switching enclosure). |
| | **SIL** | Delivery muffler (1 per compressor) (**MOPSH**). |
| **ANM** | | Rack lifting rings (supplied with the rack not fitted). |
| | **BAC** | Suction accumulator (**MOPSH**). |
| | **EVH** | Oil return solenoid valve. |
| | **CCB** | Control terminal rail wiring. |
| | **ARM** | Switching enclosure (contact us). |

## MOPSH - Semi-Hermetic

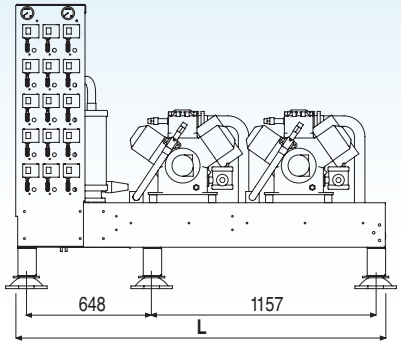


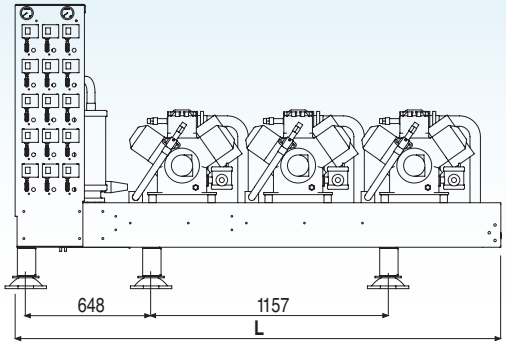


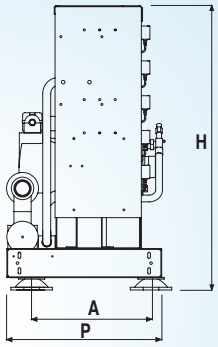


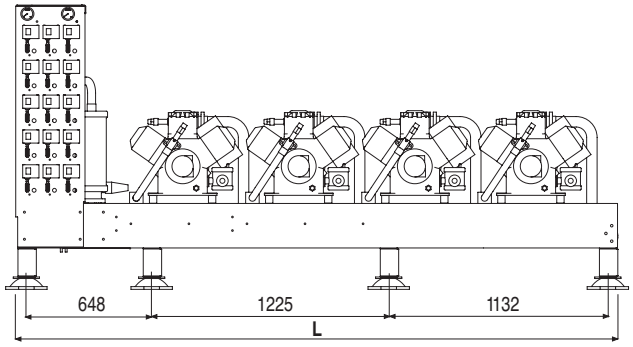


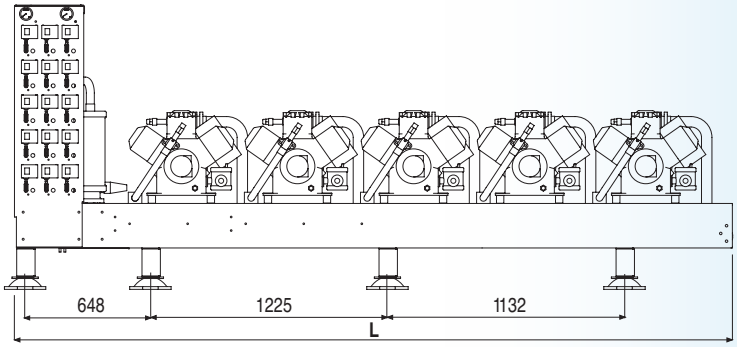


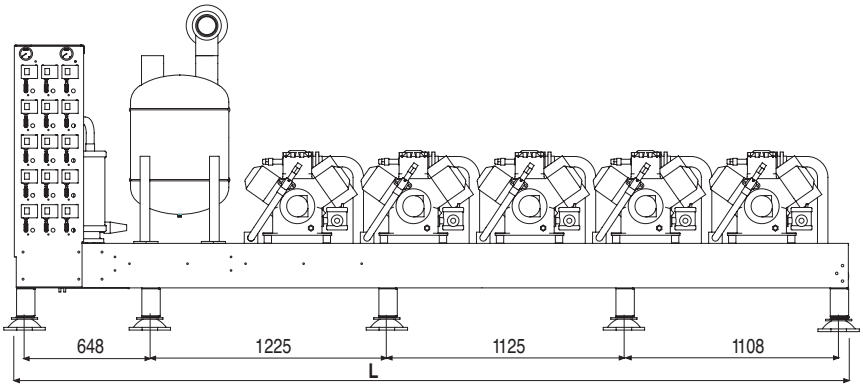


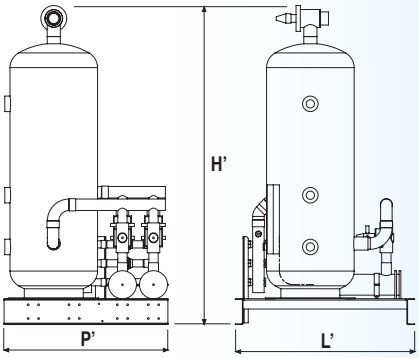


## MOSC - Scroll

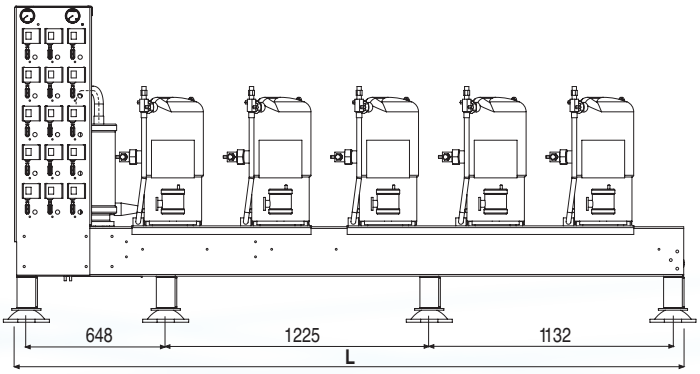


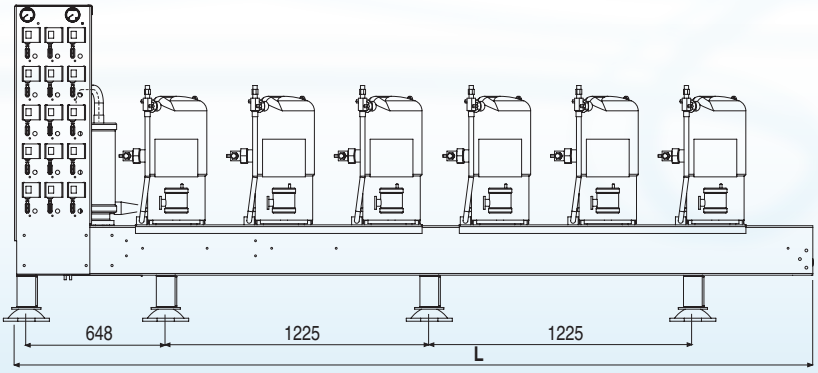


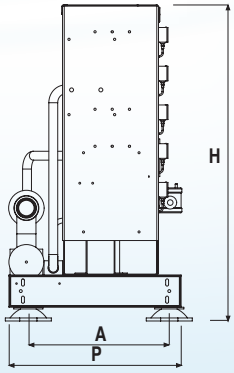


## Liquid station

| | | 50 l. | 70 l. | 115 l. | 160 l. | 250 l. | 320 l. |
|---|---|---|---|---|---|---|---|
| L' | mm | 650 | 650 | 650 | 650 | 1040 | 1040 |
| P' | mm | 620 | 620 | 620 | 620 | 950 | 950 |
| H' | mm | 1350 | 1700 | 1950 | 1750 | 1900 | 2300 |
| Weight | kg | 110 | 140 | 190 | 230 | 300 | 400 |

## MOPSH

Chill range

| -10°C/+45°C * | | MOPSH ... | 60 2P | 73 2P | 88 2P | 91 3P | 109 3P | 121 4P | 132 3P | 146 4P | 160 3P |
|---|---|---|---|---|---|---|---|---|---|---|---|
| Capacity R404A* | | kW | 61,6 | 75,2 | 90,8 | 92,4 | 112,8 | 123,1 | 136,2 | 150,4 | 165,4 |
| Input power* | | kW | 29,6 | 32,6 | 39,8 | 44,4 | 48,9 | 59,3 | 59,6 | 65,1 | 72,5 |
| Compressor | | Nb | 2 | 2 | 2 | 3 | 3 | 4 | 3 | 4 | 3 |
| Max. input current | | A | 65.0 | 62.0 | 74.0 | 97.5 | 93.0 | 130.0 | 111.0 | 124.0 | 135.0 |
| Receiver volume | | l. | 70 | 70 | 115 | 160 | 160 | 160 | 160 | 160 | 250 |
| Standard connection package | Discharge | Ø | 1"3/8 | 1"5/8 | 1"5/8 | 1"5/8 | 1"5/8 | 2"1/8 | 2"1/8 | 2"5/8 | 2"5/8 |
| | Suction | Ø | 2"5/8 | 2"5/8 | 3"1/8 | 3"1/8 | 3"1/8 | 2 x 2"5/8 | 2 x 2"5/8 | 2 x 2"5/8 | 2 x 2"5/8 |
| | Liquid | Ø | 1"1/8 | 1"1/8 | 1"3/8 | 1"3/8 | 1"3/8 | 2 x 1"3/8 | 2 x 1"3/8 | 2 x 1"3/8 | 2 x 1"3/8 |
| Rack dimensions | L | mm | 1915 | 1915 | 1915 | 2515 | 2515 | 3115 | 2515 | 3115 | 2515 |
| | P | mm | 800 | 800 | 800 | 800 | 1000 | 1000 | 1000 | 1000 | 1000 |
| | H | mm | 1500 | 1500 | 1500 | 1500 | 1500 | 1500 | 1500 | 1500 | 1500 |
| | A | mm | 655 | 655 | 655 | 755 | 755 | 755 | 755 | 755 | 755 |
| Weight | | kg | 580 | 538 | 572 | 824 | 781 | 1081 | 836 | 1039 | 944 |

| -10°C/+45°C * | | MOPSH ... | 175 4P | 186 3P | 213 4P | 234 3P | 248 4P | 287 5P | 310 5P | 317 4P | 397 5P |
|---|---|---|---|---|---|---|---|---|---|---|---|
| Capacity R404A* | | kW | 181,6 | 199,1 | 220,6 | 224,9 | 265,5 | 275,7 | 331,8 | 299,8 | 374,8 |
| Input power* | | kW | 79,5 | 88,7 | 96,7 | 111,6 | 118,2 | 120,9 | 147,8 | 148,8 | 186,0 |
| Compressor | | Nb | 4 | 3 | 4 | 3 | 4 | 5 | 5 | 4 | 5 |
| Max. input current | | A | 148.0 | 159.0 | 180.0 | 234.0 | 212.0 | 226.0 | 265.0 | 312.0 | 390.0 |
| Receiver volume | | l. | 250 | 250 | 250 | 250 | 250 | 320 | 320 | 320 | 320 |
| Standard connection package | Discharge | Ø | 2"5/8 | 2"5/8 | 2"5/8 | 2"5/8 | 3"1/8 | 3"1/8 | 3"1/8 | 3"1/8 | 3"1/8 |
| | Suction | Ø | 2 x 2"5/8 | 2 x 3"1/8 | 2 x 3"1/8 | 2 x 3"1/8 | 3 x 3"1/8 | 3 x 3"1/8 | 3 x 3"1/8 | 3 x 3"1/8 | 3 x 3"1/8 |
| | Liquid | Ø | 2 x 1"3/8 | 2 x 1"3/8 | 2 x 1"5/8 | 2 x 1"5/8 | 3 x 1"3/8 | 3 x 1"3/8 | 3 x 1"3/8 | 3 x 1"3/8 | 3 x 1"5/8 |
| Rack dimensions | L | mm | 3115 | 2515 | 3115 | 2515 | 3115 | 3715 | 3715 | 3115 | 3715 |
| | P | mm | 1000 | 1000 | 1000 | 1000 | 1000 | 1000 | 1000 | 1000 | 1000 |
| | H | mm | 1500 | 1500 | 1500 | 1500 | 1500 | 1500 | 1500 | 1500 | 1500 |
| | A | mm | 755 | 755 | 755 | 755 | 755 | 755 | 755 | 755 | 755 |
| Weight | | kg | 1074 | 984 | 1291 | 1064 | 1311 | 1557 | 1557 | 1371 | 1647 |

** Evaporation temp./Condensation temp. - Superheating 10K, subcooling 3K.* **Refer to the software package for a more accurate rack selection.**

| | PR1 | PR2 | PR3 | BPS | HPG | BP1 | HPS | CDP | TXL | BD1 | ALF | ALR | PAV | SSD | RLS 70l. | RLS 115l. | RLS 160l. | RLS 250l. | RLS 320l. | BDR | VFA | SIL | ANM | BAC | EVH | CCB | ARM |
|---|---|---|---|---|---|---|---|---|---|---|---|---|---|---|---|---|---|---|---|---|---|---|---|---|---|---|---|
| **MOPSH 60 / 2P** | O | O | - | O | O | O | O | O | O | O | O | O | O | O | - | O | - | - | - | O | - | O | O | O | O | O | O |
| **MOPSH 73 / 2P** | O | O | - | O | O | O | O | O | O | O | O | O | O | O | - | O | - | - | - | O | - | O | O | O | O | O | O |
| **MOPSH 88 / 2P** | O | O | - | O | O | O | O | O | O | O | O | O | O | - | - | - | O | - | - | O | - | O | O | O | O | O | O |
| **MOPSH 91 / 3P** | O | O | - | O | O | O | O | O | O | O | O | O | O | - | - | - | - | O | - | O | - | O | O | O | O | O | O |
| **MOPSH 109 / 3P** | O | O | - | O | O | O | O | O | O | O | O | O | O | - | - | - | - | O | - | O | O | O | O | O | O | O | O |
| **MOPSH 121 / 4P** | O | O | O | O | O | O | O | O | O | O | O | O | O | - | - | - | - | O | - | O | O | O | O | O | O | O | O |
| **MOPSH 132 / 3P** | O | O | O | O | O | O | O | O | O | O | O | O | O | - | - | - | - | O | - | O | O | O | O | O | O | O | O |
| **MOPSH 146 / 4P** | O | O | O | O | O | O | O | O | O | O | O | O | O | - | - | - | - | O | - | O | O | O | O | O | O | O | O |
| **MOPSH 160 / 3P** | O | O | O | O | O | O | O | O | O | - | O | O | O | - | - | - | - | - | O | O | O | O | O | O | O | O | O |
| **MOPSH 175 / 4P** | O | O | O | O | O | O | O | O | O | - | O | O | O | - | - | - | - | - | O | O | O | O | O | O | O | O | O |
| **MOPSH 186 / 3P** | O | O | O | O | O | O | O | O | O | - | O | O | O | - | - | - | - | - | O | O | O | O | O | O | O | O | O |
| **MOPSH 213 / 4P** | O | O | O | O | O | O | O | O | O | - | O | O | O | - | - | - | - | - | O | O | O | O | O | O | O | O | O |
| **MOPSH 234 / 3P** | O | O | O | O | O | O | O | O | O | - | O | O | O | - | - | - | - | - | O | O | O | O | O | O | O | O | O |
| **MOPSH 248 / 4P** | - | O | O | O | O | O | O | O | O | - | O | O | O | - | - | - | - | - | O | O | O | O | O | O | O | O | O |
| **MOPSH 287 / 5P** | - | O | O | O | O | O | O | O | O | - | O | O | O | - | - | - | - | - | - | O | O | O | O | O | O | O | O |
| **MOPSH 310 / 5P** | - | O | O | O | O | O | O | O | O | - | O | O | O | - | - | - | - | - | - | O | O | O | O | O | O | O | O |
| **MOPSH 317 / 4P** | - | O | O | O | O | O | O | O | O | - | O | O | O | - | - | - | - | - | - | O | O | O | O | O | O | O | O |
| **MOPSH 397 / 5P** | - | O | O | O | O | O | O | O | O | - | O | O | O | - | - | - | - | - | - | O | O | O | O | O | O | O | O |

## MOPSH

### Low temperature range

| -35°C/+40°C* | | MOPSH ... | 18 2N | 26 2N | 27 3N | 31 2N | 33 2N | 39 2N | 39 3N | 41 4N | 47 3N |
|---|---|---|---|---|---|---|---|---|---|---|---|
| Capacity R404A* | | kW | 23,2 | 29,0 | 34,9 | 33,6 | 42,0 | 46,7 | 43,5 | 46,5 | 50,4 |
| Input power* | | kW | 18,1 | 22,4 | 27,2 | 27,1 | 32,8 | 37,4 | 33,6 | 36,2 | 40,6 |
| Compressor | | Nb | 2 | 2 | 3 | 2 | 2 | 2 | 3 | 4 | 3 |
| Max. input current | | A | 62.0 | 74.0 | 93.0 | 90.0 | 106.0 | 156.0 | 111.0 | 124.0 | 135.0 |
| Receiver volume | | l. | 70 | 70 | 115 | 115 | 115 | 160 | 160 | 160 | 160 |
| Standard connection package | Discharge | Ø | 1"3/8 | 1"3/8 | 1"3/8 | 1"3/8 | 1"3/8 | 1"3/8 | 1"3/8 | 1"3/8 | 1"5/8 |
| | Suction | Ø | 2"5/8 | 2"5/8 | 2"5/8 | 2"5/8 | 3"1/8 | 3"1/8 | 3"1/8 | 3"1/8 | 2 x 2"5/8 |
| | Liquid | Ø | 7/8" | 1"1/8 | 1"3/8 | 1"3/8 | 1"3/8 | 1"3/8 | 2 x 7/8" | 2 x 7/8" | 2 x 7/8" |
| Rack dimensions | L | mm | 1915 | 1915 | 2515 | 1915 | 1915 | 1915 | 2515 | 3115 | 2515 |
| | P | mm | 800 | 800 | 800 | 800 | 800 | 800 | 800 | 800 | 1000 |
| | H | mm | 1500 | 1500 | 1500 | 1500 | 1500 | 1500 | 1500 | 1500 | 1500 |
| | A | mm | 655 | 655 | 655 | 655 | 755 | 755 | 755 | 755 | 755 |
| Weight | | kg | 582 | 612 | 812 | 710 | 720 | 730 | 869 | 1091 | 994 |

| -35°C/+40°C* | | MOPSH ... | 50 3N | 59 3N | 62 4N | 67 4N | 78 5N | 79 4N | 84 5N | 98 5N |
|---|---|---|---|---|---|---|---|---|---|---|
| Capacity R404A* | | kW | 63,0 | 70,1 | 67,2 | 83,9 | 84,0 | 93,5 | 104,9 | 116,9 |
| Input power* | | kW | 49,2 | 56,0 | 54,2 | 65,5 | 67,7 | 74,7 | 81,9 | 93,4 |
| Compressor | | Nb | 3 | 3 | 4 | 4 | 5 | 4 | 5 | 5 |
| Max. input current | | A | 159.0 | 234.0 | 180.0 | 212.0 | 225.0 | 312.0 | 265.0 | 390.0 |
| Receiver volume | | l. | 160 | 250 | 250 | 250 | 250 | 250 | 320 | 320 |
| Standard connection package | Discharge | Ø | 1"5/8 | 1"5/8 | 1"5/8 | 1"5/8 | 2"1/8 | 2"1/8 | 2"1/8 | 2"5/8 |
| | Suction | Ø | 2 x 2"5/8 | 2 x 3"1/8 | 2 x 3"1/8 | 2 x 3"1/8 | 3 x 2"5/8 | 3 x 2"5/8 | 3 x 3"1/8 | 3 x 3"1/8 |
| | Liquid | Ø | 2 x 1"1/8 | 2 x 1"1/8 | 2 x 1"1/8 | 2 x 1"3/8 | 3 x 1"1/8 | 3 x 1"1/8 | 3 x 1"1/8 | 3 x 1"1/8 |
| Rack dimensions | L | mm | 2515 | 2515 | 3115 | 3115 | 3715 | 3115 | 3715 | 3715 |
| | P | mm | 1000 | 1000 | 1000 | 1000 | 1000 | 1000 | 1000 | 1000 |
| | H | mm | 1500 | 1500 | 1500 | 1500 | 1500 | 1500 | 1500 | 1500 |
| | A | mm | 755 | 755 | 755 | 755 | 755 | 755 | 755 | 755 |
| Weight | | kg | 1064 | 1084 | 1321 | 1361 | 1577 | 1391 | 1637 | 1687 |

** Evaporation temp./Condensation temp. - Superheating 10K, subcooling 3K.* **Refer to the software package for a more accurate rack selection.**

| | PR1 | PR2 | PR3 | BPS | HPG | BP1 | HPS | CDP | TXL | BD1 | ALF | ALR | PAV | SSD | RLS 70l. | RLS 115l. | RLS 160l. | RLS 250l. | RLS 320l. | BDR | VFA | SIL | ANM | BAC | EVH | CCB | ARM |
|---|---|---|---|---|---|---|---|---|---|---|---|---|---|---|---|---|---|---|---|---|---|---|---|---|---|---|---|
| **MOPSH 18 / 2N** | O | O | - | O | O | O | O | O | O | O | O | O | O | O | - | O | - | - | - | O | - | O | O | O | O | O | O |
| **MOPSH 26 / 2N** | O | O | - | O | O | O | O | O | O | O | O | O | O | - | - | O | - | - | - | O | - | O | O | O | O | O | O |
| **MOPSH 27 / 3N** | O | O | - | O | O | O | O | O | O | O | O | O | O | - | - | - | O | - | - | O | - | O | O | O | O | O | O |
| **MOPSH 31 / 2N** | O | O | - | O | O | O | O | O | O | O | O | O | O | - | - | - | O | - | - | O | - | O | O | O | O | O | O |
| **MOPSH 33 / 2N** | O | O | - | O | O | O | O | O | O | O | O | O | O | - | - | - | O | - | - | O | - | O | O | O | O | O | O |
| **MOPSH 39 / 2N** | O | O | - | O | O | O | O | O | O | O | O | O | O | - | - | - | - | O | - | O | - | O | O | O | O | O | O |
| **MOPSH 39 / 3N** | O | O | O | O | O | O | O | O | O | O | O | O | O | - | - | - | - | O | - | O | - | O | O | O | O | O | O |
| **MOPSH 41 / 4N** | O | O | O | O | O | O | O | O | O | O | O | O | O | - | - | - | - | O | - | O | - | O | O | O | O | O | O |
| **MOPSH 47 / 3N** | O | O | O | O | O | O | O | O | O | O | O | O | O | - | - | - | - | O | - | O | O | O | O | O | O | O | O |
| **MOPSH 50 / 3N** | O | O | O | O | O | O | O | O | O | O | O | O | O | - | - | - | - | O | - | O | O | O | O | O | O | O | O |
| **MOPSH 59 / 3N** | O | O | O | O | O | O | O | O | O | - | O | O | O | - | - | - | - | - | O | O | O | O | O | O | O | O | O |
| **MOPSH 62 / 4N** | O | O | O | O | O | O | O | O | O | - | O | O | O | - | - | - | - | - | O | O | O | O | O | O | O | O | O |
| **MOPSH 67 / 4N** | O | O | O | O | O | O | O | O | O | - | O | O | O | - | - | - | - | - | O | O | O | O | O | O | O | O | O |
| **MOPSH 78 / 5N** | - | O | O | O | O | O | O | O | O | - | O | O | O | - | - | - | - | - | O | O | O | O | O | O | O | O | O |
| **MOPSH 79 / 4N** | - | O | O | O | O | O | O | O | O | - | O | O | O | - | - | - | - | - | O | O | O | O | O | O | O | O | O |
| **MOPSH 84 / 5N** | - | O | O | O | O | O | O | O | O | - | O | O | O | - | - | - | - | - | - | O | O | O | O | O | O | O | O |
| **MOPSH 98 / 5N** | - | O | O | O | O | O | O | O | O | - | O | O | O | - | - | - | - | - | - | O | O | O | O | O | O | O | O |

## MOSC

### Chill range

| -10°C/+45°C * | | MOSC ... | 64 5P | 90 5P | 108 6P | 110 5P | 129 5P | 132 6P | 154 6P |
|---|---|---|---|---|---|---|---|---|---|
| Capacity R404A* | | kW | 57,9 | 87,0 | 104,4 | 105,8 | 125,5 | 127,0 | 150,6 |
| Input power* | | kW | 28,6 | 40,7 | 48,9 | 52,5 | 63,0 | 63,0 | 75,6 |
| Compressor | | Nb | 5 | 5 | 6 | 5 | 5 | 6 | 6 |
| Max. input current | | A | 73 | 102 | 122 | 141 | 167 | 169 | 200 |
| Receiver volume | | l. | 70 | 115 | 115 | 115 | 160 | 160 | 160 |
| Standard connection package | Discharge | Ø | 1"5/8 | 1"5/8 | 2"1/8 | 2"1/8 | 2"1/8 | 2"1/8 | 2"5/8 |
| | Suction | Ø | 2"5/8 | 3"1/8 | 3"1/8 | 3"1/8 | 3"1/8 | 4"1/8 | 4"1/8 |
| | Liquid | Ø | 1"1/8 | 1"3/8 | 1"3/8 | 1"3/8 | 1"5/8 | 1"5/8 | 1"5/8 |
| Rack dimensions | L | mm | 3115 | 3115 | 3715 | 3115 | 3115 | 3715 | 3715 |
| | P | mm | 800 | 800 | 800 | 1000 | 1000 | 1000 | 1000 |
| | H | mm | 1500 | 1500 | 1500 | 1500 | 1500 | 1500 | 1500 |
| | A | mm | 655 | 655 | 755 | 755 | 755 | 755 | 755 |
| Weight | | kg | 650 | 680 | 800 | 700 | 700 | 810 | 820 |

** Evaporation temp./Condensation temp. - Superheating 10K, subcooling 3K.* **Refer to the software package for a more accurate rack selection.**

| | PR1 | PR2 | PR3 | BPS | HPG | BP1 | HPS | CDP | TXL | BD1 | ALF | ALR | PAV | SSD | RLS 70l. | RLS 115l. | RLS 160l. | RLS 250l. | RLS 320l. | BDR | VFA | SIL | ANM | BAC | EVH | CCB | ARM |
|---|---|---|---|---|---|---|---|---|---|---|---|---|---|---|---|---|---|---|---|---|---|---|---|---|---|---|---|
| **MOSC 64 / 5P** | O | O | - | O | O | O | O | O | S | O | O | O | O | O | - | O | - | - | - | O | - | - | O | - | O | O | O |
| **MOSC 90 / 5P** | O | O | - | O | O | O | O | O | S | O | O | O | O | - | - | - | O | - | - | O | - | - | O | - | O | O | O |
| **MOSC 108 / 6P** | O | O | O | O | O | O | O | O | S | O | O | O | O | - | - | - | O | - | - | O | - | - | O | - | O | O | O |
| **MOSC 110 / 5P** | O | O | O | O | O | O | O | O | S | O | O | O | O | - | - | - | O | - | - | O | - | - | O | - | O | O | O |
| **MOSC 129 / 5P** | O | O | O | O | O | O | O | O | S | O | O | O | O | - | - | - | - | O | - | O | - | - | O | - | O | O | O |
| **MOSC 132 / 6P** | O | O | O | O | O | O | O | O | S | O | O | O | O | - | - | - | - | O | - | O | - | - | O | - | O | O | O |
| **MOSC 154 / 6P** | O | O | O | O | O | O | O | O | S | O | O | O | O | - | - | - | - | O | - | O | - | - | O | - | O | O | O |

*S : Standard*

## MOSC

### Low temperature range

| -35°C/+40°C * | | MOSC ... | 20 5N | 23 5N | 28 6N | 35 5N | 38 5N | 42 6N | 45 6N |
|---|---|---|---|---|---|---|---|---|---|
| Capacity R404A* | | kW | 23,2 | 31,8 | 38,2 | 39,4 | 47,5 | 47,3 | 57,0 |
| Input power* | | kW | 22,6 | 29,2 | 35,0 | 37,0 | 48,5 | 44,5 | 58,2 |
| Compressor | | Nb | 5 | 5 | 6 | 5 | 5 | 6 | 6 |
| Max. input current | | A | 81 | 112 | 134 | 126 | 153 | 151 | 184 |
| Receiver volume | | l. | 70 | 70 | 115 | 160 | 160 | 160 | 160 |
| Standard connection package | Discharge | Ø | 1"3/8 | 1"3/8 | 1"3/8 | 1"3/8 | 1"3/8 | 1"5/8 | 1"5/8 |
| | Suction | Ø | 2"5/8 | 2"5/8 | 3"1/8 | 3"1/8 | 3"1/8 | 3"1/8 | 4"1/8 |
| | Liquid | Ø | 1"1/8 | 1"1/8 | 1"3/8 | 1"3/8 | 1"3/8 | 1"3/8 | 1"5/8 |
| Rack dimensions | L | mm | 3115 | 3115 | 3715 | 3115 | 3115 | 3715 | 3715 |
| | P | mm | 800 | 800 | 800 | 800 | 800 | 800 | 1000 |
| | H | mm | 1500 | 1500 | 1500 | 1500 | 1500 | 1500 | 1500 |
| | A | mm | 655 | 655 | 755 | 755 | 755 | 755 | 755 |
| Weight | | kg | 820 | 820 | 980 | 890 | 930 | 1040 | 1100 |

** Evaporation temp./Condensation temp. - Superheating 10K, subcooling 3K.* **Refer to the software package for a more accurate rack selection.**

| | PR1 | PR2 | PR3 | BPS | HPG | BP1 | HPS | CDP | TXL | BD1 | ALF | ALR | PAV | SSD | RLS 70l. | RLS 115l. | RLS 160l. | RLS 250l. | RLS 320l. | BDR | VFA | SIL | ANM | BAC | EVH | CCB | ARM |
|---|---|---|---|---|---|---|---|---|---|---|---|---|---|---|---|---|---|---|---|---|---|---|---|---|---|---|---|
| **MOSC 20 / 5N** | O | O | - | O | O | O | O | O | - | O | O | O | O | O | - | O | - | - | - | O | - | - | O | - | O | O | O |
| **MOSC 23 / 5N** | O | O | - | O | O | O | O | O | - | O | O | O | O | O | - | O | - | - | - | O | - | - | O | - | O | O | O |
| **MOSC 28 / 6N** | O | O | - | O | O | O | O | O | - | O | O | O | O | - | - | - | O | - | - | O | - | - | O | - | O | O | O |
| **MOSC 35 / 5N** | O | O | O | O | O | O | O | O | - | O | O | O | O | - | - | - | - | O | - | O | - | - | O | - | O | O | O |
| **MOSC 38 / 5N** | O | O | O | O | O | O | O | O | - | O | O | O | O | - | - | - | - | O | - | O | - | - | O | - | O | O | O |
| **MOSC 42 / 6N** | O | O | O | O | O | O | O | O | - | O | O | O | O | - | - | - | - | O | - | O | - | - | O | - | O | O | O |
| **MOSC 45 / 6N** | O | O | O | O | O | O | O | O | - | O | O | O | O | - | - | - | - | O | - | O | - | - | O | - | O | O | O |

HEATCRAFT™
Worldwide Refrigeration

# Compressor rack

## MOVSH range

### Semi-hermetic screw compressor

- This range meets the needs and expectations of today's market in terms of reliability, efficiency and compactness.
- Various rack models with 2 to 6 screw compressors.
- Supplied with a complete switching enclosure.

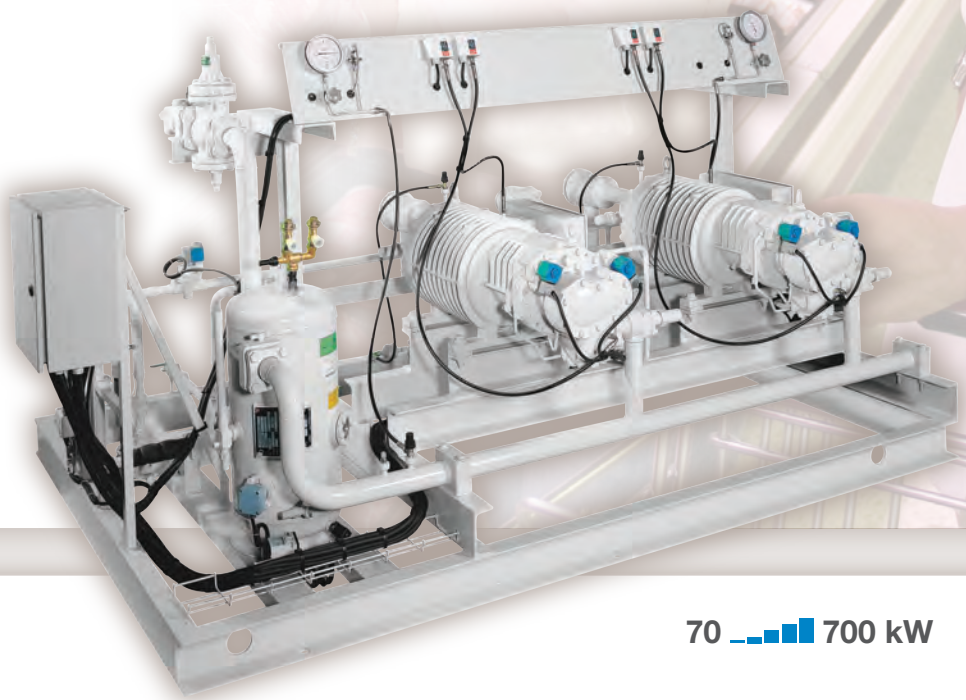

70 700 kW

FRIGA-BOHN

HYFRA® PEDIA

HK® REFRIGERATION

Heatcraft reserves itself the right to make changes at any time without preliminary notice - Photos non-contractual

## Market segments

*FSM Hard Discount - Supermarkets - Hypermarkets*
*FCS Refrigerated storage and transit stocking - Dispatch centres – Food processing*

## Description

### Compressors
- Screw compressors with part-winding start protection motors.
- Suction and delivery valves, non-return valve and capacity reduction.

### Collectors
- 304L stainless steel suction collectors, low speed.
- Stainless steel delivery collectors.
- One suction filter with stainless steel sieve.
- Optional suction valve(s).

### Liquid receiver
- Vertical separate from the rack.
- Inlet and outlet valves.
- Liquid indicator.
- Safety valve (double from 100 litres).

### Liquid line
- Removable filter dryer.
- Operating valve.
- Liquid indicator.
- Optional liquid valve(s).

## Certifications

PED 97/23/CE

### Oil circuit
- 3-way mixing valve for homogenous thermostatic oil control.
- Oil temperature max./min. safety thermostats.
- One oil indicator per compressor.
- Oil flow monitor.
- Solenoid valve.
- Manual shut-off valve.
- High-efficiency filter.

### Oil separator
- Heaters.
- Control thermostat.
- Min. oil level detector.
- Indicator, safety valve, shut-off valve, non-return valve and filling valve.

### Monitoring devices
- HP and LP manometers.
- 1 or 2 automatic reset HP cartridge pressure switch(s) per compressor (according to EN 378-2: 2009).
- HP pressure switch and automatic reset LP safety switch.
- Oil temperature safety and control thermostat.
- Oil temperature display thermometer.
- Delivery temperature, flow-rate and oil level protection relay.

## Options

### Miscellaneous
- Air or water oil cooling.
- System saver for chill racks.
- Oversized receiver.
- Water-cooled condenser fitted.
- Heat-exchanger.
- Hot-gas defrost in all its forms.
- Switching enclosure.

HEATCRAFT™
Worldwide Refrigeration

# Compressor rack

E Solutions
Efficiency • Environment

## Other configurations

Specially adapted to suit dimensional, acoustic and energy efficiency constraints.

- **Duplex "Booster" rack.**
- **Stand-alone, duplex low-temperature and chill rack.**
- **Encased rack.**
- **Compressor rack with superimposed centrifugal fan condenser.**
- **Compressor unit with liquid receiver.**

Heatcraft reserves itself the right to make changes at any time without preliminary notice - Photos non-contractual

FRIGA-BOHN

HYFRA® PEDIA

HK® REFRIGERATION

# Compressor rack - Other configurations

## Market segments

*FSM Hard Discount - Supermarkets - Hypermarkets*

## Duplex "Booster" rack

- Semi-hermetic or Scroll compressors.
- LP stage at the top and MP stage at the bottom on a superimposed or separate frame.
- Injection expansion valve, solenoid valve and desuperheating liquid suction accumulator.
- Liquid station delivered on a separate frame with liquid subcooler exchanger (upon request).
- Regenerative heat-exchanger (upon request).
- Complete switching enclosure (not fitted).

### Advantages

- Space saving in machine rooms, reduced footprint.
- 1 delivery and a single condenser for the LP and MP stages.
- Enhanced performance coefficient (COP).
- Reduced compressor size.
- Possibility to provide a removable frame to enable installation in narrow or difficult access sites (contact us for details).

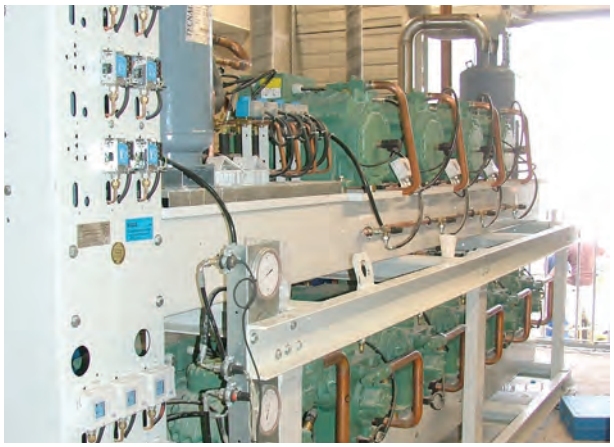

## Stand-alone, duplex low-temperature and chill rack

- Semi-hermetic or Scroll compressors.
- Superimposed frame with lifting rings.
- Low-temperature and chill racks with common delivery (upon request).
- Liquid station delivered on a separate frame with liquid sub-cooler exchanger (upon request).
- Regenerative heat-exchanger (upon request).
- Complete switching enclosure (not fitted).

### Advantages

- Space saving in machine rooms, reduced footprint.
- The choice of a common delivery offers a reduction in the roof space required with the installation of a single condenser unit.
- Possibility to provide a removable frame to enable installation in narrow or difficult access sites (contact us for details).

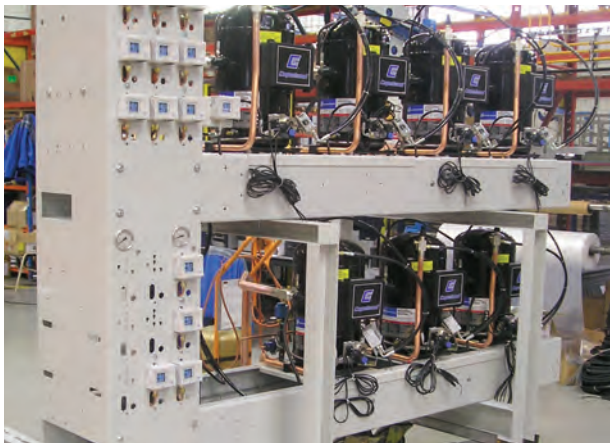

## Encased rack

- Semi-hermetic, Scroll or semi-hermetic screw compressors.
- Pre-paint, sheet-metal casing with removable panels secured with a ¼-turn latches, noise insulation on 6 sides with a cooling system connected to a rack available upon request.
- Frame with lifting rings.
- Incorporated switching enclosure.

### Advantages

- Designed for outdoor, floor or roof installation. The frame base lifting rings render handling operations easier.
- These encased racks are ideal for use in an urban environment thanks to their noise-insulated casing (upon request).
- Alternative to narrow machine rooms.

# Compressor rack - Other configurations

## Market segments

*FFS Cafés - Hotels - Restaurants - Corner shops – Mini-markets*
*FSM Hard Discount - Supermarkets - Hypermarkets*

## Compressor rack with superimposed centrifugal fan condenser

- 2 to 4 semi-hermetic or Scroll compressors.
- Galvanized sheet steel frame with superimposed centrifugal fan condenser type CCT or CCV.
- Pre-painted casing with noise insulation on 6 sides available upon request.
- One delivery-side vibration damper per compressor.
- External off-load start-up for compressors > 7,5HP (optional).
- Switching enclosure and pre-wired rack upon request.

### Advantages

- Designed for installation in machine rooms, these racks have a small footprint and enable a reduction in roof space requirements.
- The centrifugal fan condensers type CCT and CCV have a high air pressure availability (up to 200Pa) and enable several air outlet combinations.
- We propose several solutions to meet noise level constraints:
  - Encased and noise insulated compression zone,
  - Noise insulation shell (Scroll compressors),
  - Noise insulation on the condenser of CCT and CCV,
  - EC motors on condensers of type CCV as standard, guaranteeing a low noise level.

## Compressor unit on liquid receiver

### MONOSH

- Semi-hermetic compressor with casing heater and suction and delivery valves.
- 21 or 40-litre horizontal liquid receiver according to models with valves and safety shut-off valve.
- Optional:
  - Head line (filter dryer, indicator, solenoid valve and shut-off valve),
  - Suction line (suction accumulator and vibration dampers),
  - Delivery line with vibration damper, muffler, oil separator
  - Oil line (manual valve, indicator and solenoid valve),
  - Switching enclosure (not fitted),
  - Pre-painted sheet metal casing ideal for outdoor use (incorporated enclosure).

### Advantages

- The MONOSH liquid receiver units have a reduced footprint.
- A wide choice of options enables adaptation of the unit to specific requirements.
- The units are delivered as standard with HP/LP pressure switches and oil differential switches, receiver shut-off valves, safety shut-off valve…
- Models with or without casing, the compressor is placed in the longitudinal direction on the receiver making it easier to extract and providing better access to the oil pump.

HEATCRAFT™
Worldwide Refrigeration

# Chiller

E Solutions
Efficiency • Environment

## Ice water production range
## PEG

- Chiller with 1, 2 or 3 circuits up to 780 kW.
- Primary fluids: R134a/MEG 35% or MPG - R404A.
  Secondary fluids: 35% MEG or MPG.
- Installation in the machine room.
- Independent refrigeration circuits with remote air or incorporated water condenser.
- Semi-hermetic piston, Scroll or semi-hermetic screw compressors.

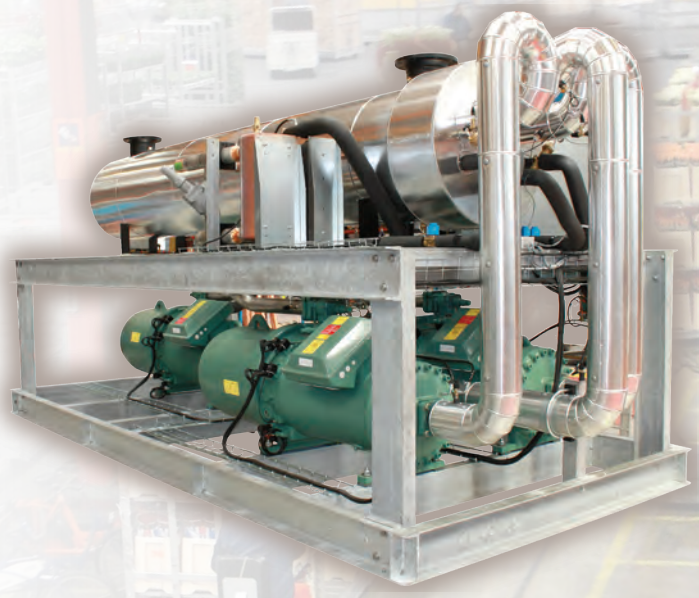

## Encased outdoor ice water production range
## PEG / ECOLEAN / NEOSYS®

*Natural fluids:*
*Glycol water*
*Environment*

Heatcraft reserves itself the right to make changes at any time without preliminary notice - Photos non-contractual

FRIGA-BOHN
HYFRA® PEDIA
HK® REFRIGERATION

## Market segments

*FSM Hard Discount - Supermarkets - Hypermarkets*
*FCS Refrigerated storage and transit stocking - Dispatch centres - Food processing - Canteen kitchens*

## Examples of installations

- Screw compressors with energy-saving plate heat-exchanger.
- Stainless steel condensate drip tray under the compressor.
- Total isolation, heat-exchanger and suction collector.
- Electronic expansion valve with complete control.
- Pre-wired switching cabinet.
- **One multi-tube or plate desuperheater per circuit.**

## PEG 300 ... 760 range

Ice water production

### Refrigeration capacity

**291 to 782 kW** (glycol water -4°C/-8°C - 45°C condensation temperature)
**279 to 687 kW** (glycol water -5°C/-9°C - 45°C condensation temperature)

### Characteristics

- UPN hot-dip galvanized monoblock.
- 1, 2 or 3 separate refrigeration circuits.
- Capacity control up to 3 stages: 100% / 75% / 50%.
- One delivery valve per circuit.
- One vertical liquid receiver per circuit: liquid stations delivered on separate frames.
- Multi-tube heat-exchanger (copper tube bundle and rolled steel).
- Electronic expansion valves with regulator, probes, sensors and solenoid valves.
- Screw compressors (HSK or CSH).

- Screw compressors with energy-saving plate heat-exchanger.
- Total isolation of heat-exchanger and suction collector (option).
- Electronic expansion valve with complete control
- Liquid receiver fitted.
- Pre-wired power + control circuits (upon request).
- **Paint RAL 9002 (upon request).**
- **Complete hydraulic equipment.**

## PEG 170 ... 320 range

Ice water production

### Refrigeration capacity

**168 to 316 kW** (glycol water -4°C/-8°C - 45°C condensation temperature)
**178 to 334 kW** (glycol water -3/-7°C - 45°C condensation temperature)

### Characteristics

- UPN hot-dip galvanized monoblock.
- 1 or 2 separate refrigeration circuits.
- One delivery valve per circuit.
- One vertical liquid receiver per circuit: liquid stations delivered on separate frames or fitted.
- Multi-tube heat-exchanger (copper tube bundle and rolled steel).
- 2 electronic expansion valves with regulator, probes, sensors and solenoid valves.
- Semi-hermetic piston: 3/4 or 5 compressors.

## Advantages

| Servicing / Maintenance |
| --- |
| The rack design is optimized to offer easy access to all components: compressors, plate heat-exchanger, desuperheater, by-pass valve,... |
| The by-pass valves are used to isolate the circuit to simplify operations during maintenance on the receiver, heat-exchanger,... |
| A condensate drip tray is placed under each compressor as standard in order to keep the machine room clean. |

## Certifications

PED 97/23/CE

## Market segments

*FSM* *Hard Discount - Supermarkets - Hypermarkets*
*FCS* *Refrigerated storage and transit stocking - Dispatch centres - Food processing - Canteen kitchens*
*Conservation of fruits, vegetables, flowers... at an ambient temperature of +6°C/8°C.*

## PEG encased, outdoor range

**Glycol water** (MEG/MPG) -4°C/-8°C and -5°C/-9°C

- Pre-painted sheet-metal casing with removable panels secured with a ¼-turn latches, noise insulation on 6 sides with a cooling system connected to a rack available upon request.
- UPN galvanized frame with lifting rings.
- Multi-tube heat-exchanger with 2 refrigeration circuits.
- Total isolation of the heat-exchanger and suction collector.
- Liquid sub-cooling exchanger for screw compressor.
- Electronic expansion valve with complete control.
- Switching enclosure fitted.
- Complete hydraulic equipment and circuit (option).

### Advantages

- Designed for outdoor floor or roof installation.
- Simple installation, the frame base lifting rings render handling operations easier.
- These encased units are ideal for use in an urban environment thanks to the noise-insulated casing (upon request).
- Alternative to narrow machine rooms.

## ECOLEAN / NEOSYS®

The ice water is produced with a compact, monoblock, liquid cooler with air condensation for discrete outdoor installation. This range is equipped with Scroll compressors filled with environmentally-friendly refrigerant R410A and variable-speed fans for optimized noise and energy efficiency.

### Cold only

**Nominal conditions**
Water: +2°C/-2°C - 20% MEG - Air: +35°C

EUROVENT CERTIFIED PERFORMANCE
www.eurovent-certification.com

15 kW 145 kW 780 kW

**ECOLEAN**
**10 to 120 kW**

**NEOSYS®**
**120 to 630 kW**

Switching enclosure with Butterfly™ door. Protection of components and persons in case of adverse weather conditions.

Multiple Compliant™ Scroll compressors, zero maintenance. Axial and radial clearance enabling the compressor tolerate liquid hammerhead and injection of debris for an extended working life.

Technical compartment. Compressors, water heat-exchangers, pumps, thermal and noise insulation materials, protected against outdoor weather conditions and water splashing during cleaning of coils.

OWLET™ fan with ceramic blades to considerably increase fan longevity.

High corrosion-resistant, aluminium micro-channel coils. -40% less refrigerant.

V-form coils with protection guards. Protection against hailstone and impact damage.

3 YEAR WARRANTY*

*3-year warranty for key components

## Heatcraft is specialised in industrial refrigeration

**Equipment designed for use in industry for the cooling of tooling machines, thermal power stations and data storage centers.**

### Industry - Machine Tooling (IMT)

- Aeronautics, automobile
- Steelworks, foundries, sheet-metal plants
- Engineering and watchmaking manufactories
- Printing industry

**Their cooling requirements**

- Maintain a constant temperature in the process; reduction/elimination of water consumption

**Our product solutions**

Compressorized products:

- Central cooling units, compact, stand-alone units for water, emulsions and oils

Air heat exchangers:

- Horizontal, V type and vertical pressurised helicoidal dry coolers

### Industry - ENergy (IEN)

- Electrical power stations
- Urban heating stations
- Cogeneration
- Biomass, solar, wind
- Diesel plants

**Their cooling requirements**

- Heat-evacuation from electrical power generation plants
- Operation with the dry air bulb
- Maintaining of temperature stability in production stations

**Our product solutions**

Air heat exchangers:

- Helicoidal dry coolers **FC / FI NEOSTAR**
- V type helicoidal dry coolers **AEV**
- Vertical pressurised helicoidal dry coolers

### Industry - TeleCom (ITC)

- Data centers
- Telephone exchanges
- Banks
- Hospitals

**Their cooling requirements**

- Heat-evacuation from electrical power generation plants
- Operation with the dry air bulb
- Maintaining of temperature stability in production stations

**Our product solutions**

Air heat exchangers:

- Helicoidal dry coolers **FC / FI NEOSTAR**
- V type helicoidal dry coolers **AEV**
- Vertical pressurised helicoidal dry coolers

HEATCRAFT™
Worldwide Refrigeration

# Liquid coolers

## Industry - Machine Tooling

- Compact coolers
  **VWK 7-31/1**
  **Chilly**
- Portable coolers
  **CWK**
  **VWK**
  **SVK**
  **HYFRA sigma**
- Emulsion / oil coolers
  **CWK-D**
  **Chilly-TRK**
  **TRK**
  **VWK-D**
- Central cooling systems
  **ECOLEAN**
  **NEOSYS®**

Heatcraft reserves itself the right to make changes at any time without preliminary notice - Photos non-contractual

FRIGA-BOHN

HYFRA® PEDIA

HK® REFRIGERATION

## VWK/1 / Chilly
## Compact coolers
### Main characteristics

Water coolers in a modern and robust industrial design,
easy “Plug In - Plug out” installation.
Air-cooled system in a compact housing with low footprint.
Quick start, each unit is factory tested and previously adjusted.
Easy accessibility to major components, compressors,
pumps, fans, controller.
All are coordinated and thus guarantee

VWK/1

Chilly

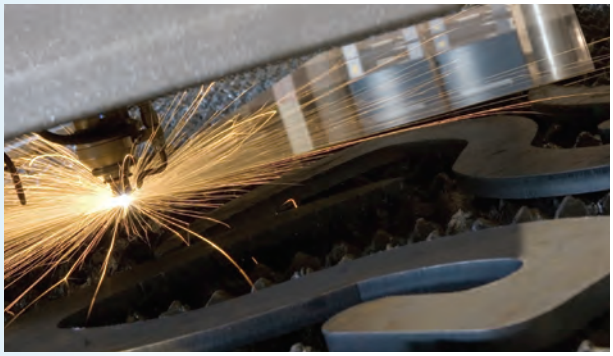

### Applications

Adapted to the following applications:

- **Laser source**
- **Machining centre HF spindle and linear motor**
- **Induction welding**
- **Spot welding and HF generator**

## CWK / VWK / SVK / HYFRA sigma
## Portable coolers
### Main characteristics

Industrial coolers of sturdy and modern design
for high capacity applications.
Air-cooled unit with a stainless steel chassis
and reduced space requirements.
Easy to install coolers, factory preset and tested.
Easy access to most components via quickly removed panels
Optimised architecture for improved operation.

CWK

VWK

SVK

### Applications

Adapted to the following applications:

- **Power laser source (CO2, Nd:Yag,....)**
- **Multi-spindle and linear motor machining centre**
- **Printing system and UV lamp**
- **Water to oil heat exchanger of hydraulic units**

| Product designations | Cooling capacity in kW | | | | | | |
|---|---|---|---|---|---|---|---|
| | 0 | 5 | 15 | 20 | 70 | 150 | >200 |
| **VWK 7-31/1** | | | | | | | |
| **Chilly** | | | | | | | |
| **CWK** | | | | | | | |
| **VWK** | | | | | | | |
| **SVK** | | | | | | | |
| **HYFRA sigma** | | | | | | | |

## CWK-D / TRK-Chilly / TRK / VWK-D

### Emulsion and oil coolers

### A technology that makes the difference

In machining centres, cooling of the part spray liquid has become a key aspect of operation.
After passing through the filtration unit, the emulsions or oils must be kept at a stable temperature using drop-in or recirculating systems.
Operational requirements (residual deposit after filtration) impose the use of specific heat-exchangers.

CWK-D TRK-Chilly TRK VWK-D

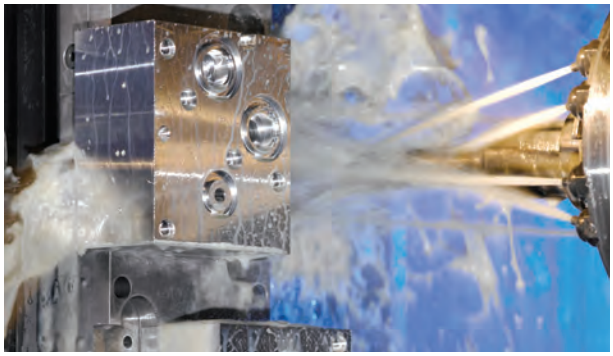

### Applications

Adapted to the following applications:

- **Filtration units**
- **Hydraulic systems**
- **Lubrication circuits**

Stability of the part spray liquid temperature helps improve machining precision and guarantee an extended edge life for the cutting tools.

## ECOLEAN / NEOSYS®

### Central cooling systems

Adapted to the following applications:

- **Centralized loops**

ECOLEAN NEOSYS®

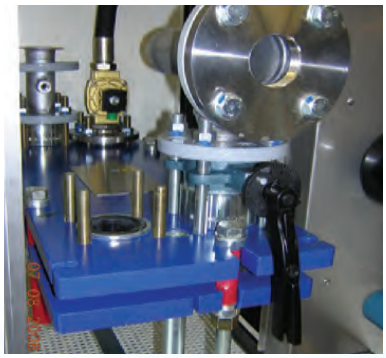

### Special-purpose machines

### Products on request

Coolers designed according to specific operating specifications:

- Context-related
- Local legislation
- Customer specifications

| Product designations | Cooling capacity in kW | | | | | | |
|---|---|---|---|---|---|---|---|
| | 0 | 5 | 15 | 20 | 70 | 150 | >200 |
| Chilly-TRK,TRK | | | | | | | |
| CWK-D | | | | | | | |
| VWK-D | | | | | | | |
| ECOLEAN | | | | | | | |
| NEOSYS® | | | | | | | |
| E.T.O. | Upon request | | | | | | |

# **Smart Refrigeration** - An entire team at your service!

## Reactivity, expertise and rigor

### The right solutions for you are our main concern

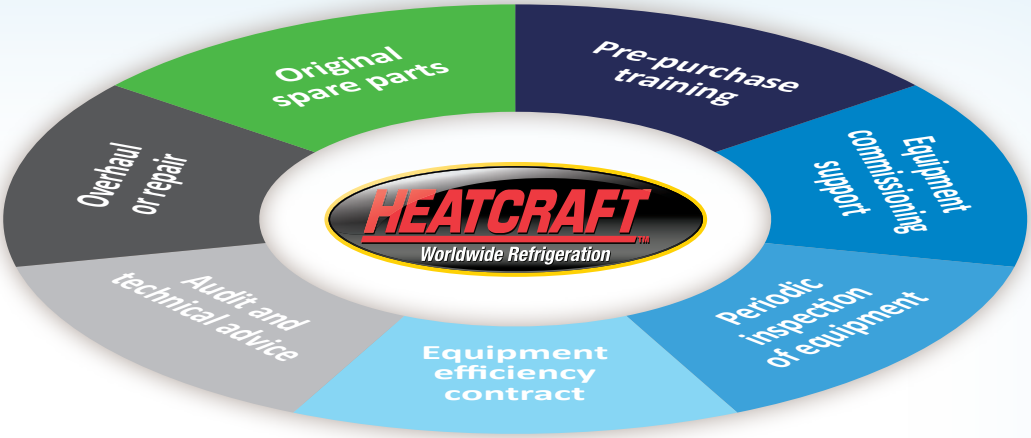


## HEATCRAFT reinvents the 1, 2, 3 year warranty

*We propose three warranty extension packs for our equipment:*

| Pack 1 | Pack 2 | Pack 3 |
|---|---|---|
| 1-year warranty parts and labour (excluding refrigerant) | 2-year warranty parts and labour (excluding refrigerant) | 3-year warranty parts and labour (excluding refrigerant) |
| To validate this pack, we propose a support contract during commissioning of our equipment.<br>We program our visits in accordance with your availability. | To validate this pack, we propose a support contract during commissioning of our equipment as well as regular Inspections during the second year of operation (preventive maintenance)<br>We program our visits in accordance with your availability. | To validate this pack, we propose a support contract during commissioning of our equipment as well as an efficiency check.<br>This consists in carrying out a certain number of inspections during the second year (preventive maintenance) and replacement of components when required (curative maintenance) during the third year.<br>We program our visits in accordance with your availability. |

## Original spare parts

For the repair and servicing needs of your equipment, HEATCRAFT proposes the spare parts best adapted to your equipment and offering the best reliability/price/safety ratio.

## Pre-purchase training*

*(financed with your training funds)*

Who better than HEATCRAFT to train you in the understanding and setting of our equipment directly on site.
Heatcraft proposes qualified instructors with in-depth knowledge and extensive technical experience acquired in the field.

## Audit and technical advice

HEATCRAFT proposes the services of extremely accessible field technicians who may assist you with the evaluation of your installation.
We are able to propose solutions which will improve the efficiency of our equipment and your processes (overhaul or repair or energy audit).

**Approval for 2012 pending*


**France**
+33 (0) 472 471 444
42, rue Roger Salengro
BP 205• 69741 Genas Cedex
France
Fax: +33 (0) 472 471 399
service.france@heatcrafteurope.com

**Germany**
+49 (0) 2687-898-0
Hyfra Industriekühlanlagen GmbH
Industriepark 54 • 56593 Krunkel
Deutschland
Fax: +49 (0) 2687-898-25
infohyfra@hyfra.com

**Spain**
+34 93 573 76 20
Avenida Meridiana, n°354,
planta 12 • 08027 Barcelona
España
Fax: +34 93 573 76 22
comercial@heatcrafteurope.com

**Poland**
+48 22 58 48 611
Ul. Wybrzeże Gdyńskie 6a
01-531 Warszawa
Polska
Fax: +48 22 58 48 600
biuro@heatcrafteurope.com

**Others**
+33 (0) 472 471 444
42, rue Roger Salengro
BP 205 • 69741 Genas Cedex
France
Fax: +33 (0) 472 471 399
service.export@heatcrafteurope.com

www.heatcrafteurope.com

# Smart Refrigeration


## France
42, rue Roger Salengro • BP 205 • 69741 Genas Cedex • France
Tel.: +33 (0) 472 471 444 • Fax: +33 (0) 472 471 399
service.client@heatcrafteurope.com

## Germany
Hyfra Industriekühlanlagen GmbH • Industriepark 54 • 56593 Krunkel • Deutschland
Tel.: +49 (0) 26 87 - 89 8 - 0 • Fax: +49 (0) 26 87 - 89 8 - 25
infohyfra@hyfra.com

## Spain
Avenida Meridiana, n°354, planta 12 • 08027 Barcelona • España
Tel.: +34 93 573 76 20 • Fax: +34 93 573 76 22
comercial@heatcrafteurope.com

## Poland
Ul. Wybrzeże Gdyńskie 6a • 01-531 Warszawa • Polska
Tel.: +48 22 58 48 611 • Fax: +48 22 58 48 600
biuro@heatcrafteurope.com

## Others
42, rue Roger Salengro • BP 205 • 69741 Genas Cedex • France
Tel.: +33 (0) 472 471 444 • Fax: +33 (0) 472 471 399
customer.serv@heatcrafteurope.com

**www.heatcrafteurope.com**


Heatcraft reserves itself the right to make changes at any time without preliminary notice - Photos non-contractual - **03/12-EN**